VC800

Video Conferencing System

Designed for Better Collaboration

VC800 is the second generation full-HD video conferencing system launched by Yealink. Equipped with the strongest embedded MCU within the industry, VC800 can support 24-site HD video conferencing. It has an all-in-one design and first-class video and audio technology that creates an easier and more effective collaboration experience. As the newest generation of Yealink VC series video conferencing systems, the VC800 adopts an intuitive user interface that makes meeting control simpler. Featureing H.265/HEVC and HD voice backed by a superior speaker, the Yealink VC800 facilitates more immersive audio-visual collaboration. VC800 supports up to 8 VCC22 cameras as '1+8' multi-camera solution. By leveraging Yealink Meeting Server(YMS), the VC800 seamlessly supports Meeting Scheduling and One-touch Meeting Access. All combine to make VC800 one of the perfect solution for the medium-to-large meeting rooms.

Microphone Array | 24 sites Multipoint | Multi-camera Solution | H.265 / HEVC | 1080P / 60FPS | Compatible with Touchscreen

Key Features and Benefits

Powerful Built-in MCU

Yealink VC800 supports up to 24 sites HD video conferencing. Meanwhile, it backs up Automatic Voice Activated Switching and local meeting control, making the meeting be in an orderly manner.

Immersive Audio-Visual Experience

Using a new 12x optical PTZ camera, it supports 1080P/60FPS video calls, thus greatly enhancing the fluency of video conferencing and making the presentation more vivid even in details. Co-worked with Yealink video conferencing microphone array VCM34 and Yealink soundbar MSpeaker, Yealink VC800 creates a better audio solution. Backed by a superior speaker and quality 20ft/360° voice pickup distance, VC800 ensures that anyone in the workspace could have an immersive HD audio experience.

Interaction and Collaboration

Adopting an industry-leading 13.3-inch touch panel and supporting meeting control, annotation and whiteboard features, Yealink VC800 offers a comfortable and productive collaborative meeting experience. In addition, VC800 supports multiple content input methods that can cover almost all devices you are using.

Less Bandwidth, Better Network Adaptability

Via supporting H.265/HEVC video codecs, just with the minimum 512kbps, 1080P HD video calls can be realized, thus saving more than 50% bandwidth than using H.264. Thanks to Yealink anti-packet loss technology, VC800 can resist up to 30% video and audio packet loss which guarantees smooth video communication.

Compatibility and Integration

Yealink VC800 supports standard H.323/SIP dual protocol. It is not only deeply integrated with Yealink Meeting Server(YMS), supporting Meeting Scheduling and One-touch Meeting Access; but also worked with Yealink Cloud Management Service, bringing quick deployment. Besides, it supports the 3rd-party room system and integrates with the leading cloud platforms.

- Built-in 24-site multipoint and can be divided into two virtual meeting rooms
- 1080P/60FPS and 12x optical PTZ camera
- H.265/HEVC video codec, 1080P from 512Kbps bandwidth
- Super packet loss recovery technology (video resistant up to 30% and audio resistant up to 70%)
- CTP20 Collaboration Touch Panel
- VCM34 Video Conferencing Microphone Array
- Two HDMI output and two HD content input (HDMI + Mini-DP)
- Supports wireless content sharing
- Support '1+8' multi-camera solution with VCC22
- Deeply integrate with leading cloud platforms: Yealink Cloud, Yealink Meeting Server, StarLeaf, Pexip, Zoom, BlueJeans, EasyMeet, Videxio

Yealink

VC800

Video Conferencing System

Package includes:
- VC800 Codec (integrate camera)
- CP960 Conference Phone (VC800-Phone)
- CTP20 Collaboration Touch Panel (VC800-VCM-CTP)
- 2 x VCM34 Video Conferencing Microphone Arrays (VC800-VCM-CTP)
- VCR11 Remote Control
- VCH50/VCH51 Video Conferencing Hub (optional)
- WPP20 Wireless Presentation Pod (optional)
- Cable Bundle

Full-HD PTZ Camera
- 1920 x 1080 video resolution
- 60 frame rate
- 12x optical zoom PTZ camera
- Horizontal field of view: 70°
- Vertical field of view: 42°
- Pan angel range: +/- 100°
- Tilt angel range: +/- 30°

Multipoint Capacity
- Built-in multipoint up to 24 sites at 1080p30
- Multipoint license for 8/16/24 sites
- Supports two virtual meeting rooms
- Additional five-way audio call
- Mixed protocols, codecs, bandwidth, resolution and frame rate

Video Standard and Network Suitability
- Video codecs: H.265/HEVC, H.264 High Profile, H.264, H.263 (Only compatible with VCC22 supporting H.265)
- Bandwidth dynamic adaptive adjustment
- Forward Error Correction (FEC), anti 30% video packet loss and 70% audio packet loss
- Shared content and audio preference strategy
- Bandwidth/protocol/auto adaptive

Audio Features
- Audio codecs:
  - 14kHz bandwidth with G.722.1C
  - 7kHz bandwidth with G.722.1
  - 3.4kHz bandwidth with G.711 (PCMA/PCMU)
  - G.729
  - ARES
- Audio technology:
  - Acoustic echo cancellation
  - Automatic gain control
  - Yealink Noise Proof Technology
  - CNG, PLC, AJB, De-Rerb

CP960 Conference Phone (VC800-Phone)
- 5-inch multi-touch screen with 720x1280 resolution
- Speaker
- Built-in 3-microphone array
- 20ft/360° voice pickup range
- Supports 2 wireless (or wired) expansion mic

Collaboration Touch Panel CTP20 (VC800-VCM-CTP)
- 13.3 inch IPS FHD 1080P capacitive touch screen
- Supports active pressure capacitance touch pen

Video Conferencing Microphone Array VCM34 (VC800-VCM-CTP)
- Built-in 3 microphone array
- 20ft/360°voice pickup range
- Up to 4 VCM34 in one system

UHD Camera UVC84 (Optional)
- 8M mega-pixels, maximum 3840 x 2160
- Maximum 60 fps
- 36x Hybrid Zoom(12x optical, 3x digital)
- Camera angle:
  - Diagonal field of view: 80°
  - Horizontal field of view: 73°
  - Vertical field of view: 45°
- Horizontal Rotation Angle: ±100°
- Vertically Rotation Angle: +40°/-90°

Call Features
- 1080p60 people + 1080P30 content sharing video quality
- Video Layout:
  - Voice activation (onePlusN)
  - onePlusN, maximum 1+7 viewable participates
  - N*N, maximum 3*3 viewable participates
  - Picture-in-picture (PIP) , full-screen
- Video/audio recording and playback
- Dual displays and 'focus' feature
- Screenshots in USB flash drive or YMS
- Group dial
- Meeting control:
  - invite/remove
  - mute/unmute participates (only for Yealink Meeting Server)
  - lock
- DND (do not disturb), call statistics
- Auto answer, mute, and call waiting
- Virtual meeting room password
- Virtual keyboard
- Local directory: 500 entries
- Call history: all/missed/received/dialed
- LDAP phonebook
- Multi-language support

Standard Communication Protocol
- H.323/SIP
- Dual stream protocol: H.239 (H.323)/BFCP (SIP)
- FECC: H.224/H.281, Sony VISCA and PELCO D/P
- H.323 protocol suite: H.245, H.225, H.235, H.241
- Gatekeeper account and SIP account

Compatible Cloud Platforms
- Yealink Cloud Management Service
- Yealink Meeting Server
- StarLeaf/UC OpenCloud, supports QCP code
- Pexip/Zoom/BlueJeans/EasyMeet/Videxio

Network and Security Features
- IPv4 and IPv6, DHCP/static IP
- HTTP/HTTPS web server
- RS232/HTTP API for control system integration
- SRTP/TLS, AES 256-bit encryption
- QoS: 802.1p/q, Diff-serv
- VLAN, IEEE802.1X, LLDP-MED
- Anti-attack
- Network diagnosis: Ping, trace route
- Time and date synchronization using SNTP
- Built-in certificate

NAT and Firewall Traversal
- NAT (manual/auto mode)
- ICE/TURN/STUN
- Yealink intelligent firewall traversal
- Open VPN
- H.460

Configuration Management
- Configuration via browser/display/CTP20/auto-provisioning
- Virtual remote control
- Firmware upgrading, factory resetting
- Export or import configuration
- System log exporting

VC800 Codec Connections
- 2 x HDMI output (supporting CEC function)
- 1 x Line-in (3.5mm)
- 1 x Line-out (3.5mm)
- 1 x Yealink extension port (RJ-45) connect to VCH50/VCH51/VCM34
- 1 x 10/100/1000M Ethernet port
- 2 x USB 2.0
- 1 x Power port
- 1 x Security lock slot
- 1 x Reset slot

VCH50 Connections
- 1 x RJ45 port connect to VC800 codec
- 1 x RJ45 port connect to VCM34
- 1 x HDMI input for content sharing (with audio)
- 1 x Mini-DP input for content sharing (with audio)
- 1 x USB 2.0 for recording

VCH51 Connections
- 1 x RJ45 port connect to VC800 codec
- 1 x HDMI Cable for content sharing (with audio)
- 1 x Type-C Cable for content sharing (with audio)
- 1 x USB 2.0 for recording

Other Physical Features
- Color: Space Silver
- External Yealink Power Adapter: AC 100~240V input and DC 48V/0.7A Output
- Wall/TV mounted shelf with screws
- Power consumption (PSU): Idle＜16W, normal operating: 17W; MAX: 21W
- USB Output: 5V⎓1A
- Dimension (W.D.H):
  - VC800 codec: 235 mm x 172 mm x 169 mm
  - CP960: 338mm x 338mm x 74mm
  - CTP20: 321.5mm x 118mm x 196mm
  - VCM34: 169mm x 171.5mm x 37.5mm
  - VCR11: 190mm x 55mm x 24mm
- Operating humidity: 10~95%
- Operating temperature: 0~40°C
- Storage temperature: -30~70°C

Package Features
- N.W/CTN: 6.6 kg
- G.W/CTN: 7.8 kg
- Giftbox size: 414mm*402mm*384mm

Compliance

CE FCC Certification RoHS Compliant REACH ISO 9001

Connections

- If you use Video Conferencing Microphone Array VCM34 (VC800-VCM-CTP), you can do the following:

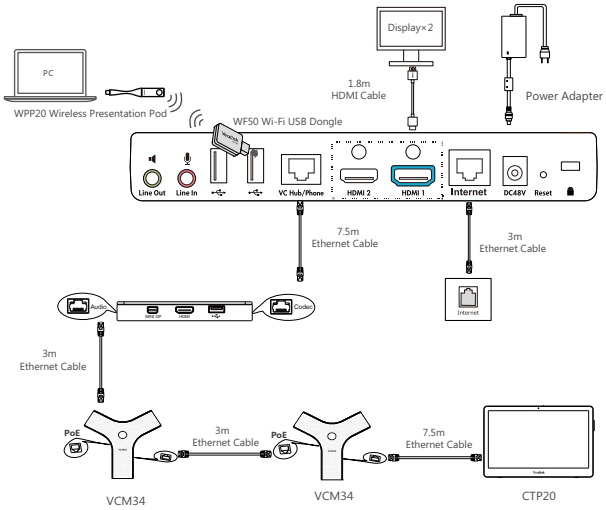

The system should be used with Yealink original power adapter (48V/0.7A) only. The use of the third-party power adapter may cause the damage to the system. The cable should be replaced at once if its skin is broken.

If you do not need the VCH50/VCH51 video conferencing hub to share content, you can connect the VC Hub/Phone port on the system to the PoE port on the VCM34 directly.

- If you use CP Wireless Expansion Mic CPW90 (VC800-Phone), you can do the following:

A: For VCH50 video conferencing hub:

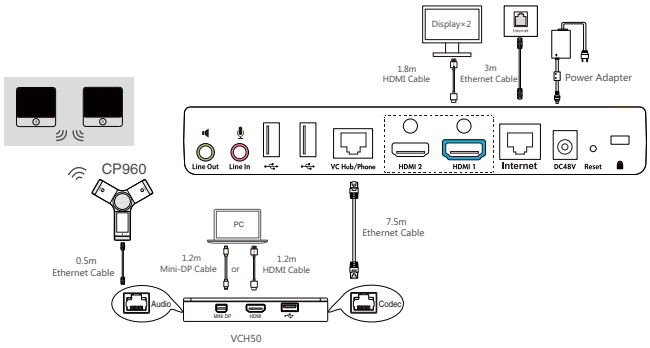

B: For VCH51 video conferencing hub:

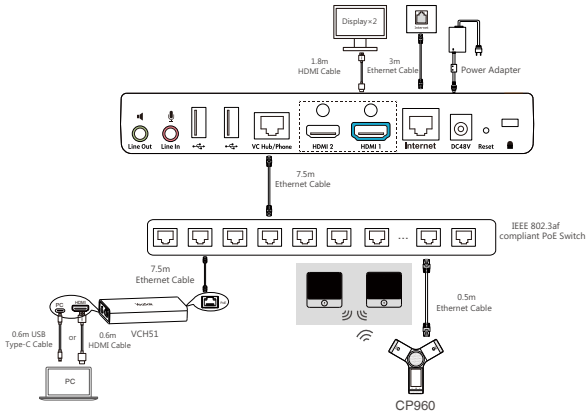

- If you use CP Wired Expansion Mic CPE90 (VC800-Phone), you can do the following:

A: For VCH50 video conferencing hub:

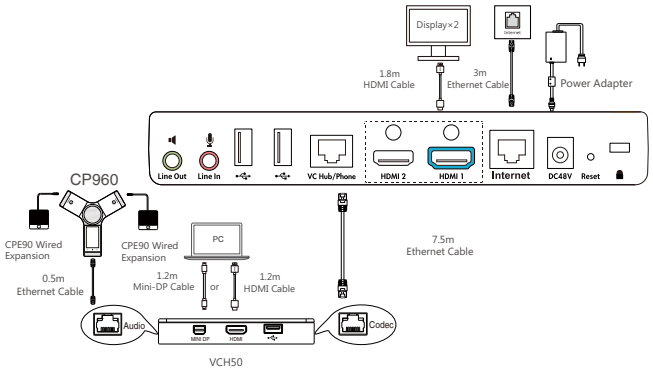

B: For VCH51 video conferencing hub:

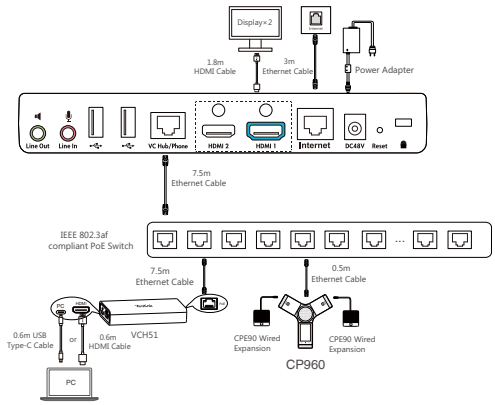

If you do not need the VCH50/VCH51 video conferencing hub to share content, you can connect the VC Hub/Phone port on the system to the PoE port on the CP960 conference phone directly.

When CP960 conference phone is connected to the endpoint, the 3.5mm audio output port and the Micro USB port are not available.

About Yealink

Yealink (Stock Code: 300628) is a global-leading provider of Unified Communication & Collaboration Solutions specialized in video conferencing, voice communications, and collaboration, dedicated to helping every person and organization embrace the power of "Easy Collaboration, High Productivity".

With best-in-class quality, innovative technology, and user-friendly experiences, Yealink is one of the best providers in more than 140 countries and regions, ranks No.1 in the global market share of IP Phone, and is the Top 5 leader in the video conferencing market (Frost & Sullivan, 2021).

For more information about Yealink, click https://www.yealink.com/en

Copyright

Copyright © 2024 YEALINK NETWORK TECHNOLOGY CO., LTD.

Copyright © 2024 Yealink Network Technology CO., LTD. All rights reserved. No parts of this publication may be reproduced or transmitted in any form or by any means, electronic or mechanical, photocopying, recording, or otherwise, for any purpose, without the express written permission of Yealink Network Technology CO., LTD.

Technical Support

Visit Yealink WIKI (http://support.yealink.com/) for firmware downloads, product documents, FAQ, and more. For better service, we sincerely recommend you to use Yealink Ticketing system (https://ticket.yealink.com) to submit all your technical issues.

YEALINK(XIAMEN) NETWORK TECHNOLOGY CO., LTD.
Web: www.yealink.com
Addr: No.666 Hu'an Rd,Huli District Xiamen City, Fujian, P.R. C
Copyright©2024 Yealink Inc. All rights reserved.