Yealink MB-Camera-6X&12X Datasheet

MeetingBoard 6x/12x Optical Zoom Camera

The MB-Camera-6X/12X is an optical zoom camera designed for the Yealink MeetingBoard in medium and large rooms. With a customized slot port design, it can be directly installed on the top of the Meetingboard, bringing a simpler deployment experience. The MB-Camera-6X/12X and the built-in wide-angle lens of MeetingBoard form a smart dual 4K camera solution equipped with Yealink's self-developed intelligent AI voice positioning and image algorithms. Through the built-in wide-angle lens, it analyzes the location and behavior of participants in real time. Then it invokes the 6X/12X optical lens to quickly and accurately track and locate participants, realizing AI intelligent tracking experiences such as auto framing and speaker tracking features, presenting you with the best viewpoint picture at all times, and bringing you a high-definition, intelligent, and smooth video experience.

Specifications

Specifications	MB-Camera-6X	MB-Camera-12X
Pixel	8 MP	8 MP
Video Output	4K/30FPS	4K/30FPS
Zoom Ratio	6x optical zoom	12x optical zoom
FOV	80°	90°
Automatic Exposure	√	√
Automatic White Balance	√	√
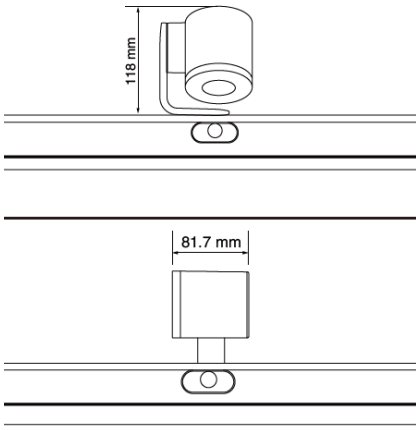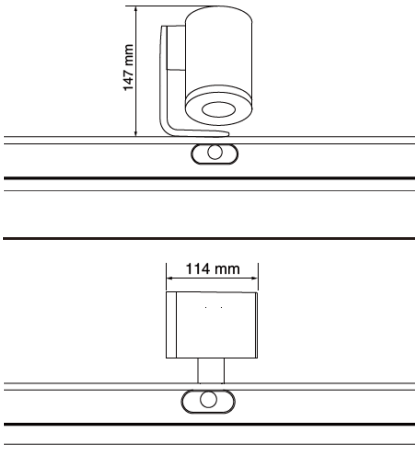
Pan Range	±100°	±100°
Tilt Range	0° /-90°	0° /-90°
Auto Framing	√	√
Speaker Tracking	√	√
PiP Mode	√	√
Presets	√	√
Electric Privacy Shutter	√	√
Physical Port	Yealink Custom Port	Yealink Custom Port
Installation Method	MeetingBoard Custom Slot	MeetingBoard Custom Slot
Size