Yealink MB-12X Pro Datasheet

MeetingBoard Pro MB-12x Pro Optical Zoom Camera

The MB-12X Pro is an optical zoom camera module specially designed for the second generation Meetingboard for medium and large conference room scenarios. It features a customized slot interface design that allows direct installation on top of the second-generation Meetingboard, eliminating the need for additional wiring and mounting brackets, offering a more streamlined deployment experience. The MB-12X Pro, together with the wide-angle lens built into the second-generation MeetingBoard, forms an intelligent triple-camera 4K camera solution. It is equipped with Yealink's fully self-developed intelligent AI voice positioning and image algorithms. By analyzing the distribution and movements of participants in real-time through the built-in wide-angle lens, it then utilizes the optical lens module of the 12X Pro for quick and accurate tracking and positioning, achieving automatic framing of subjects, voice tracking, and other AI intelligent tracking experiences. This ensures the best possible viewing angles at all times, bringing a high-definition, intelligent, and smooth video experience.

Technical Specifications

Parameter	MB-12X Pro
Video Output	4K/30FPS

Zoom Ratio	12x optical zoom
Lens angle	DFOV 90°, HFOV 80°, VFOV 49°
Automatic Exposure	Yes
Automatic White Balance	Yes
Pan Range	±100°
Tilt Range	0° /-90°
Focal Length	3.4 - 40.4mm
Aperture	F1.8 – F3.62
Minimum Illumination	0.5 lux (Day), 0.1 lux (Night)
Signal-to-Noise Ratio	>63 dB
Zoom	12x Optical Zoom
Electric Privacy Shutter	Auto
Physical Port	Yealink Custom Port
Installation Method	MeetingBoard Custom Slot
Size	- The highest distance from the top to the top of the built-in lens is 147 mm 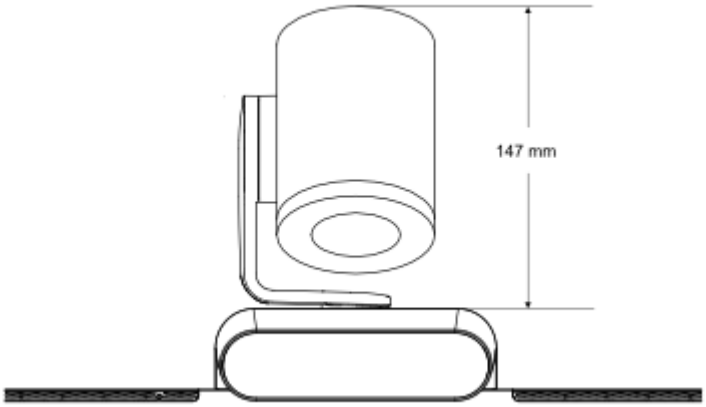 - Lens barrel length 114 mm

	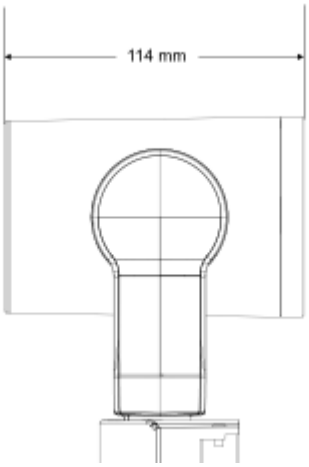
Package Contents	• MB-12X Pro • Quick Start Guide • Screwdriver • Mounting Screws
Power consumption	• Average: 8.8 W • Peak: 13.3 W • Standby: 8.4 W
Physical Features	• Carton Meas: 245 mm x 287 mm x 125 mm • Weight: - N.W: 1 kg - G.W:1.35 kg