Yealink AP08 Datasheet

Yealink AP08 DSP, a cutting-edge digital signal processor, aims to enhance your meeting experience with its exceptional automation capabilities. With support for up to 16 x 16 Dante audio channels, including 8 optimized channels with dynamic AEC, intelligent noise cancellation, and reverberation suppression, coupled with 4 x 4 analog audio channels and two simultaneous USB 3.0 Type-B device interfaces, AP08 DSP ensures smooth audio transmission and clear communication. Combined with Room Designer software, AP08 DSP seamlessly integrates automated design and acoustic environment adaptive technology, setting a new standard for audio quality and convenience in your meetings. Make Yealink AP08 DSP your preferred choice and enjoy an outstanding audio experience.

Key Features

16*16 Dante Channel

8 AEC Channels

Yealink Room Designer

AI-Based Sound Optimization

One-button Deployment

Intelligent Design

Acoustic Adaptation

Dual USB Interface

Flexible Customization

Yealink AP08 DSP supports 16 x 16 Dante audio channels with 8 channels featuring dynamic AEC algorithms. It also includes 4 x 4 analog channels and two USB-B device interfaces. With Room Designer, configure audio routing and algorithm modules to meet customized needs, ensuring exceptional audio transmission and clear communication.

One-button Custom Deploy

Yealink AP08 supports effortless plug-and-play deployment. Simply connect a set of Yealink SkySound audio devices to the same network, and within minutes, the audio links are automatically established and customized for room acoustics. This feature saves time, effort, and significantly reduces deployment costs.

Intelligent Solution Design

Yealink's exclusive automated design, paired with Room Designer software, provides a complete deployment design based on basic room data. The final result includes device quantity, placement, and audio links, reducing deployment learning costs for easy and efficient audio solution design.

Dante Audio for Teams Room

Enhance your audio experience with Yealink's native Teams meeting room solution, seamlessly integrated with MVC. Complete room audio control through the MVC control panel, supporting synchronized mute, automatic EQ, and advanced features for a comprehensive audiovisual conferencing experience.

Specifications

Parameters	Description
Dante Channels	• Input Channels: 16 Dante input (8 AEC channels) • Output Channels: 16 Dante output • Frequency Response: 50 Hz - 20 kHz • THD+N: ＜1% • Sampling Rate: 48 kHz • Bit Depth: 24-bit • Dynamic Range: 86dB

Analog Channels	• Input Channels:
	  ∘ 2 × RCA input
	  ∘ 2 × 3-pin Analog input

	• Output Channels:
	  ○ 2 × RCA output
	  ○ 2 × 3-pin Analog output
	• Frequency Response: 20 Hz - 20 kHz
	• THD+N: ＜1%
	• Input Dynamic Range: 96dB
	• Output Dynamic Range: 98dB
	• Self-Noise:
	  ○ RCA (Unbalanced): -94 dBu
	  ○ Analog (Balanced): -86 dBu
	• Input Clipping Range: 0 to 64 dB
	• Output Sensitivity Range: -40 dBu to 24 dBu
	• Phantom Power: +48VDC 10 mA max

USB Channels	• Input Channels: 2 × USB input • Output Channels: 2 × USB output • Sampling Rate: 48 kHz • Bit Depth: 16-bit/24-bit

Control Ports	• MGMT: RJ-45 for API control
	• RS232: 1 × 3-pin phoenix port
	• GPIO in:
	  ○ Digital Inputs (default):
	  ■ Input voltage range: 0 to 24VDC
	  ■ Input impedance: 29k ohms

	■ Programmable pullup: 1k ohms to +5VDC (default: disable) ■ Threshold low to high: Programmable range: 0~24VDC, default=2.8V ■ Threshold high to low: Programmable range: 0~24VDC, default=2V ○ Analog Inputs: 12bit A/D, 0 to 24VDC • GPIO out: 8-pin Phoenix port, 1-8 outputs, open-drain output (up to 24V, 0.3A), default state +3.3V • +12VDC: 0.1A • GND: Earth
LAN Ports	• LAN 1-3: Dante network port • Power Supply: ○ Each port supports IEEE802.3at PSE ○ Total maximum PSE 90 W
Product Design	• Size: L360 × W189 × H44 mm • Weight: 2.2 kg • Color: Advanced Black • Material: SGCC • Operating Temperature: 0 - 40 °C • Operating Humidity: 0 - 93 % RH
Logistics Information	• Giftbox: 410 × 325 × 70 mm

	• Weight:
	  ○ N.W/CTN 2.94 kg
	  ○ G.W/CTN 3.45 kg
	• Storage Temperature: -30 - 70 °C

Dimensions

Unit: mm

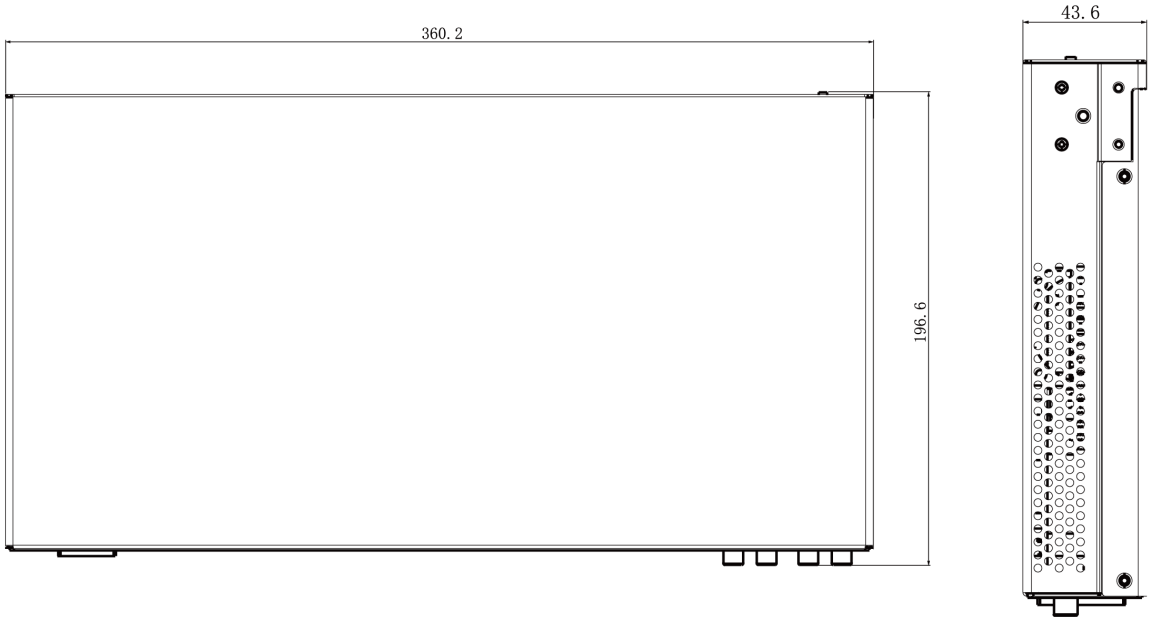

Interface

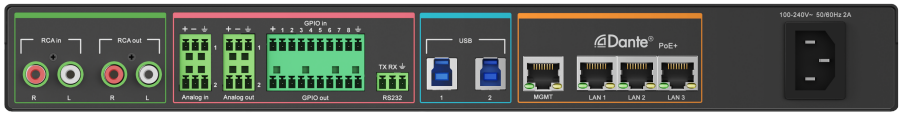

Parameters	Description
RCA in	2 × RCA unbalanced analog input
RCA out	2 × RCA unbalanced analog output
Analog in	2 × 3-Pin Phoenix connectors for balanced analog input, supports 48V phantom power
Analog out	2 × 3-Pin Phoenix connectors for balanced analog output
GPIO in	1-8 input, simulated input or contact closure (maximum 24V), switchable 5V pull-up
GPIO out	1-8 output, open-drain output (maximum 24V, 0.3A), default +3.3V
+12VDC	0.1A
GND	Earth ground
RS-232	Interface control
USB Type-B	2 × USB 3.0 device interfaces
MGMT	Network Interface Control
LAN	3 × RJ-45 Dante PoE+ powered interfaces
Power	100–240 V, 50/60 Hz, 2A

Accessory Dimensions

Unit: mm

Mounting ear-left

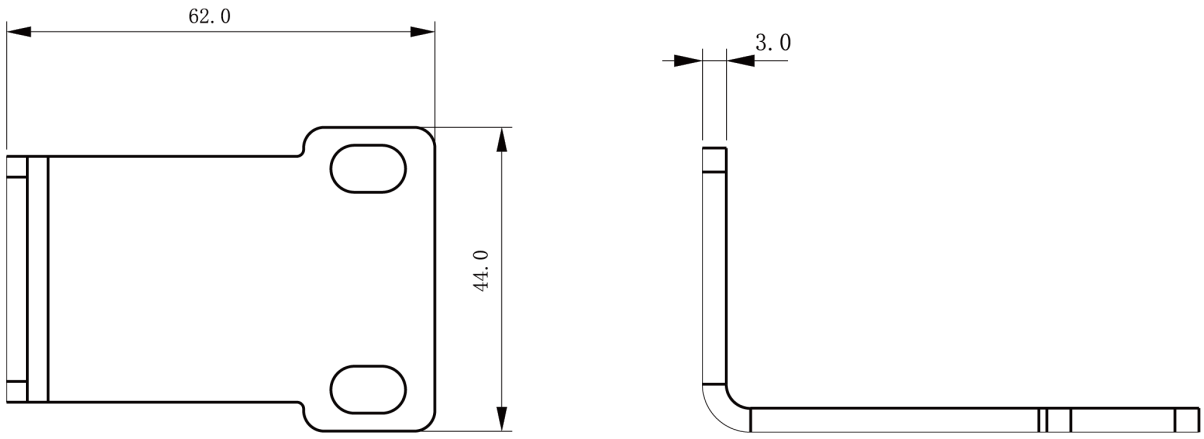
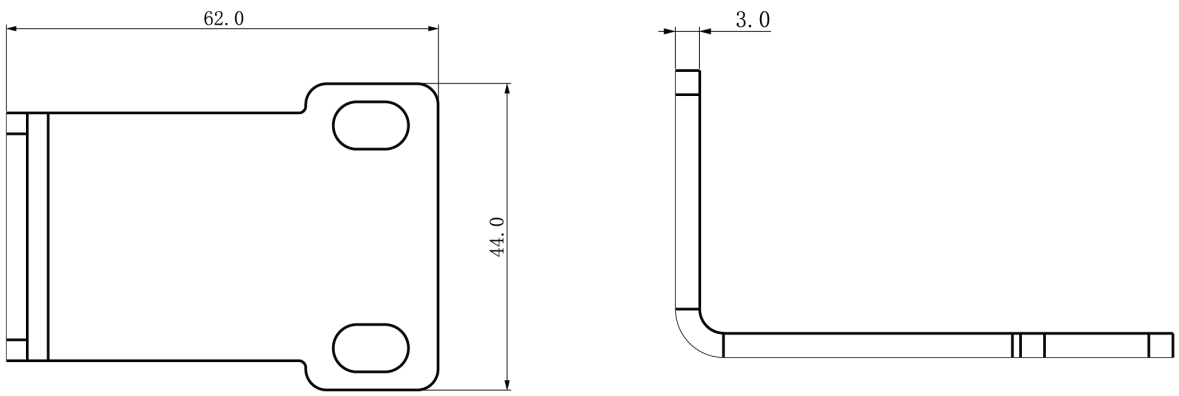
Mounting ear-right