ViewSonic

VB-STND-008

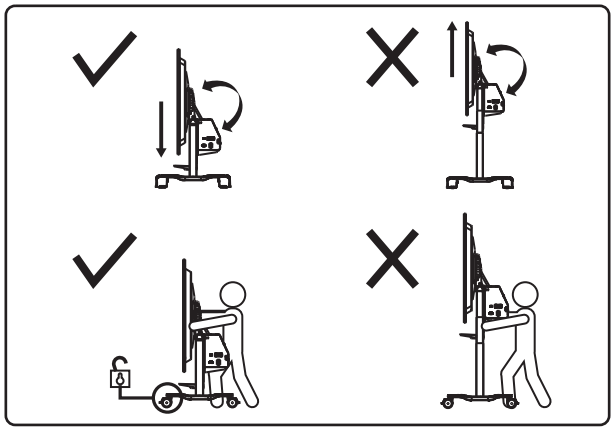

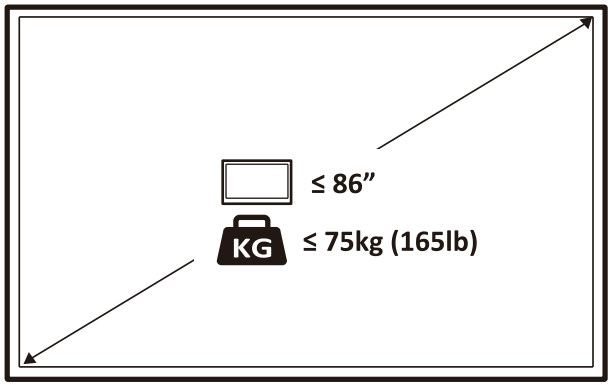

(M6 x L14) A x 2	M8 B x 6	(M5 x L25mm) C x 4
(M6 x L25mm) D x 4	(M8 x L25mm) E x 4	(M4 x L8mm) F x 4
4mm G x 1	(Lx2, Rx2) H x 4	I x 1	J x 2
K x 1	L x 1	M x 2
N x 2	O x 1
P x 1	Q x 1

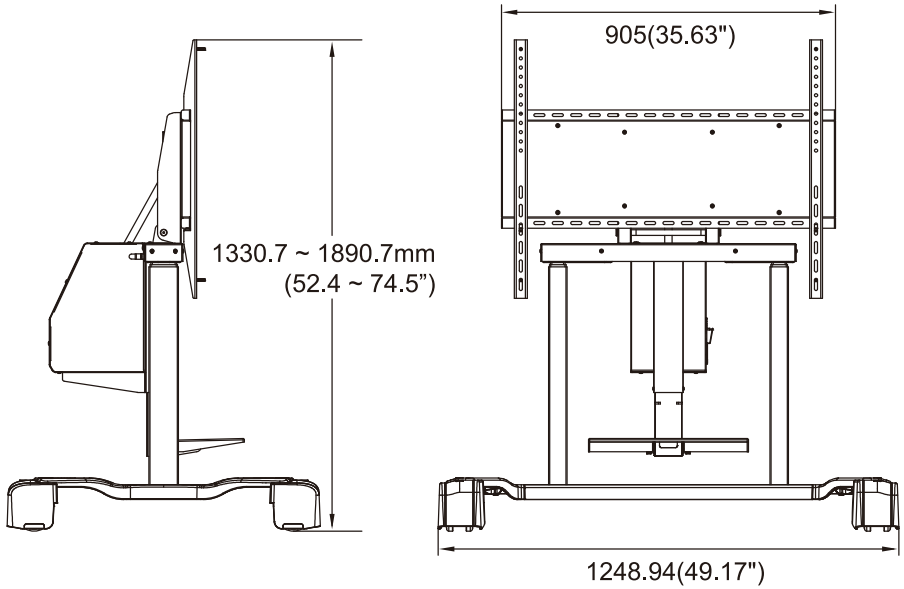

1

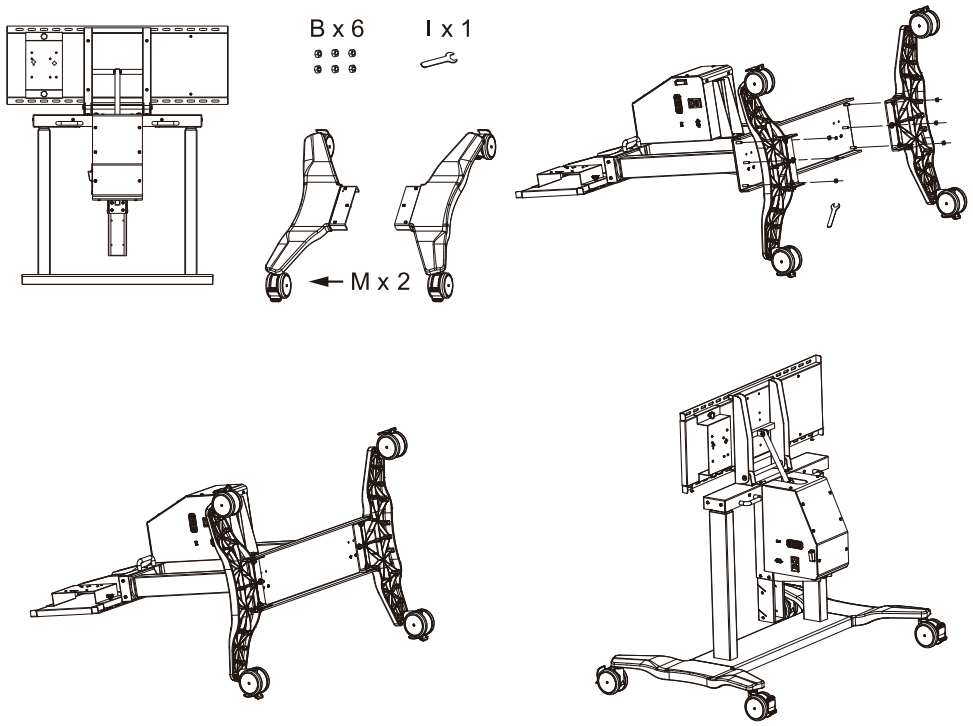

Scan for more information

Scan for more information

Scan for more information

VB-STND-008 Support Center www.viewsonic.com

ViewSonic Europe Limited
Haaksbergweg 75
1101 BR Amsterdam
Netherlands
+31 (0) 650608655
EPREL@viewsoniceurope.com
https://www.viewsonic.com/eu/

2

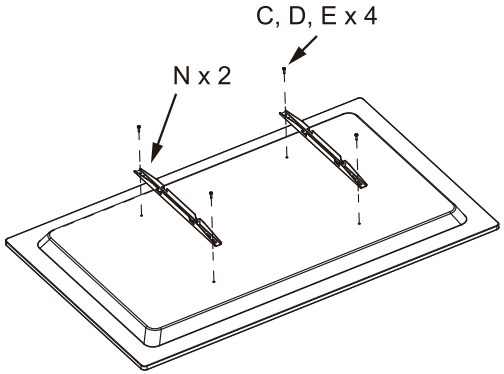

3

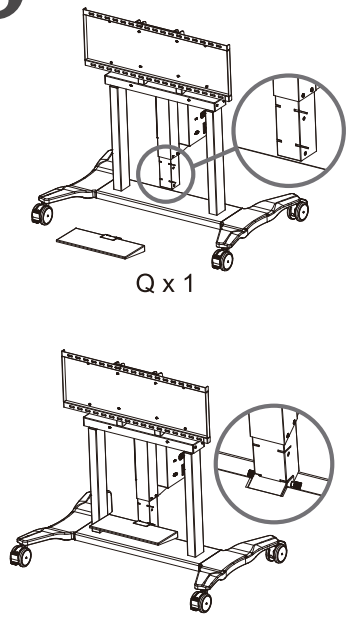

4

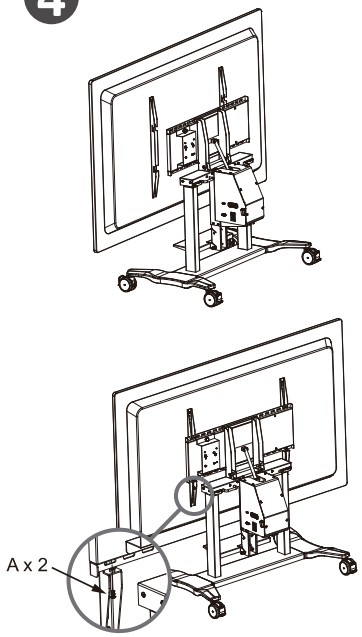

5

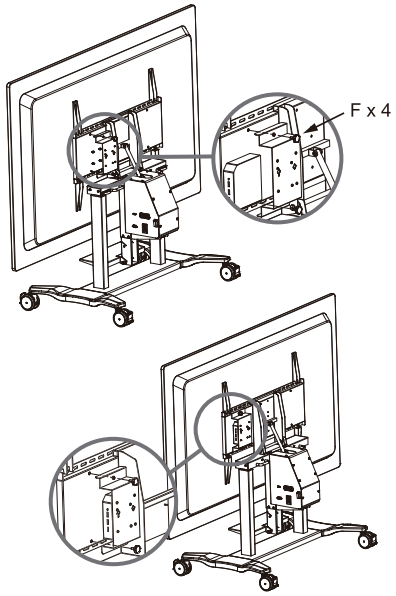

6

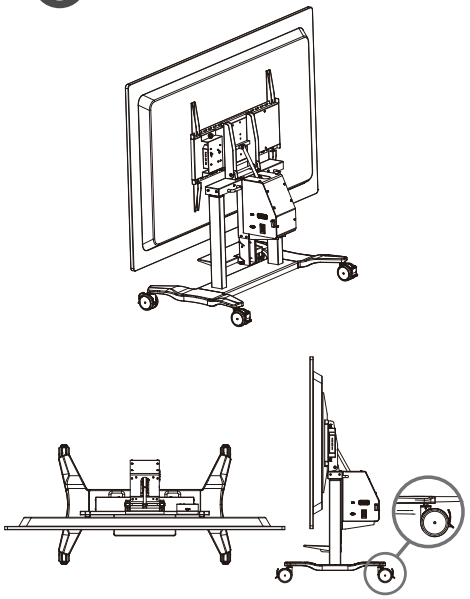

7

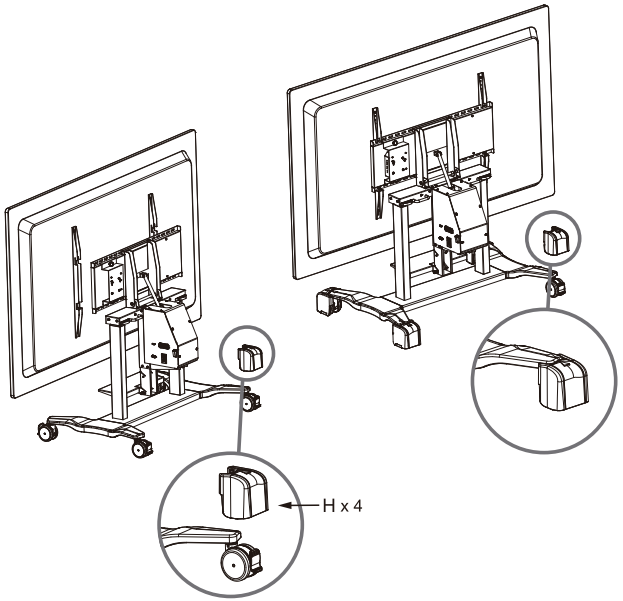

8

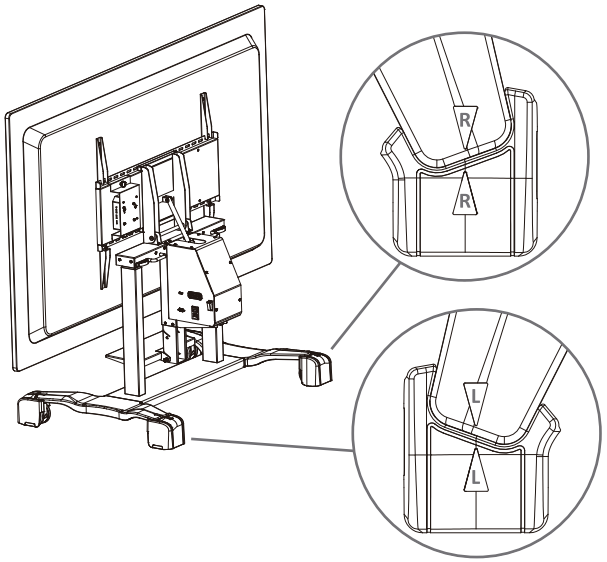

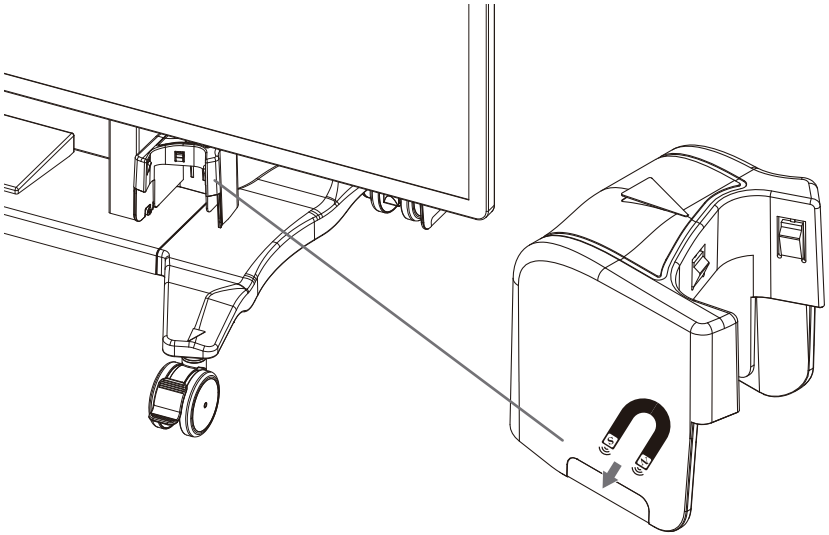

VB-STND-008_QSG_1d_20240524
Copyright © 2024 ViewSonic Corporation. All rights reserved.