VB-STND-003

Motorized Trolley Cart
Quick Setup Guide
Guide rapide début
Guía de configuración rápida
Konfigurationskurzanleitung

This device complies with part 15 of FCC Rules. Operation is subject to the following two conditions:
(1) This device may not cause harmful interference, and
(2) This device must accept any interference received, including interference that may cause undesired operation.
Industry Canada Statement
CAN ICES(B) / NMB(B)

CE Conformity for European Countries

The device complies with the relevant section of the EMC Directive 2014/30/EU, Low Voltage Directive 2014/35/EC, Eco-Design Directive 2009/125/EC, RoHS Directive 2011/65/EU

Following information is only for EU-member states:
The mark shown to the right is in compliance with the Waste Electrical and Electronic Equipment Directive 2012/19/EU (WEEE). The mark indicates the requirement NOT to dispose the equipment as unsorted municipal waste, but use the return and collection system according to local law.

CAUTION

This Cart for use only with specific ViewSonic Commercial Touch Display.
See apparatus instructions. Use with other models is capable of resulting in instability causing possible injury.

TIPPING HAZARD!
DO NOT move Cart with Display in highest position. DO NOT push Cart from front or back of Lift. DO NOT move Cart over cords or uneven, dirty, soft or sloping surfaces. DO NOT move Cart by pushing on Display. Failure to comply with this caution may result in Cart instability leading to equipment damage or personal injury.

Max.weight loading is 100kg.
Suitable for 55-75 inch display.
1.Duty cycle : please take rest for 18minutes for every 2 minutes continuous operation of the lift/ tilt mechanism.
2.Please have the panel to the lowestposition while moving the trolley.

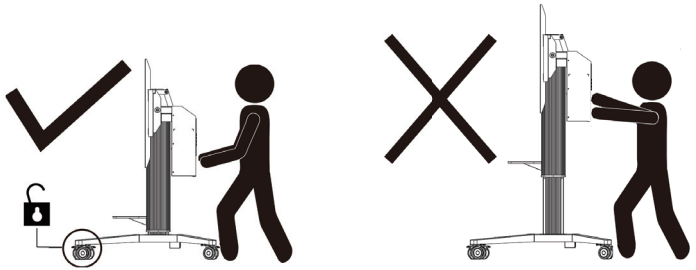

Physical Dimensions

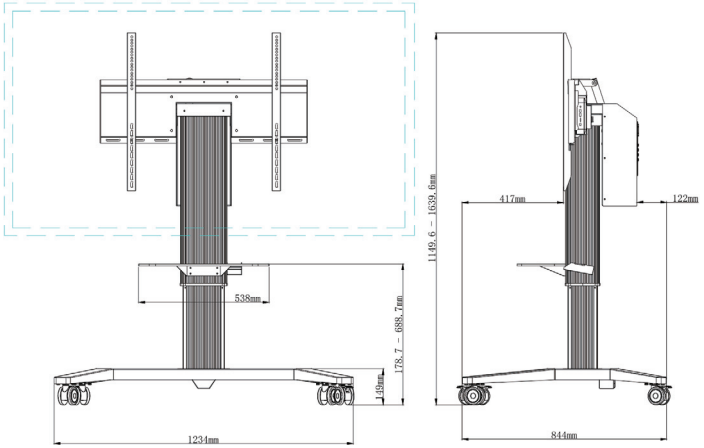

Enclosed Parts

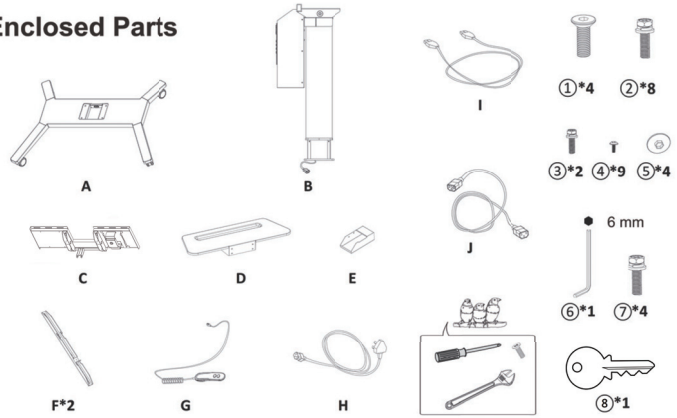

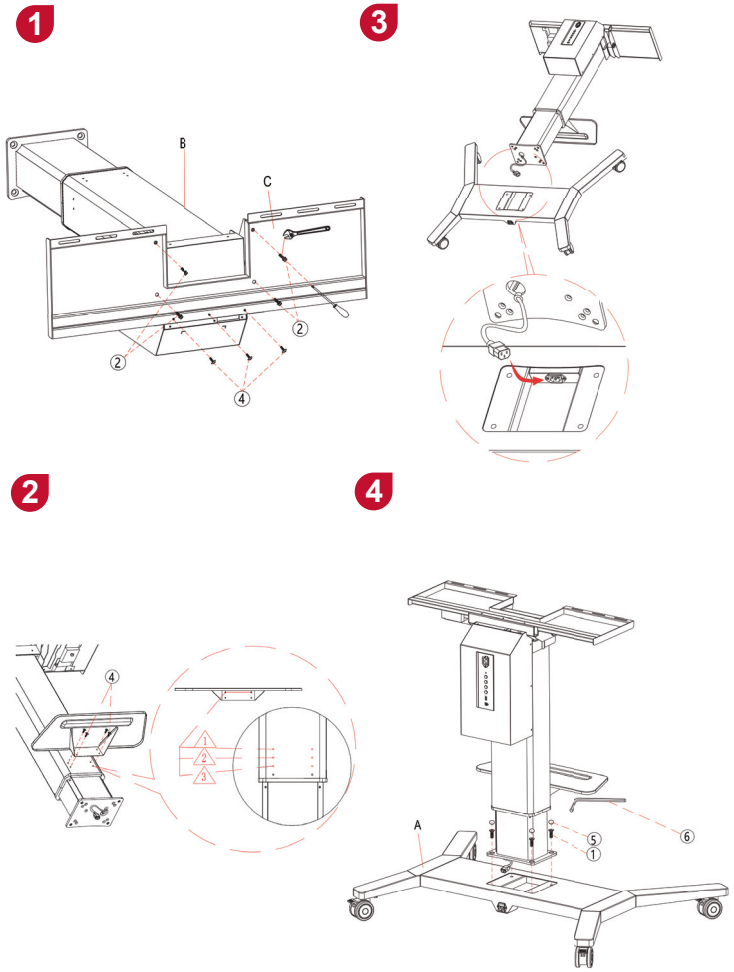

5

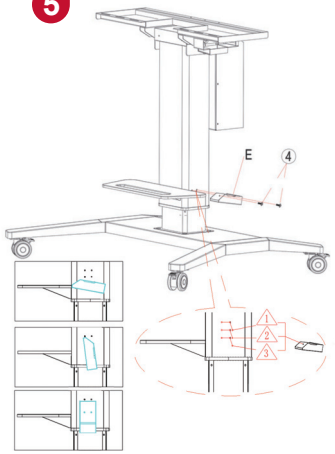

7

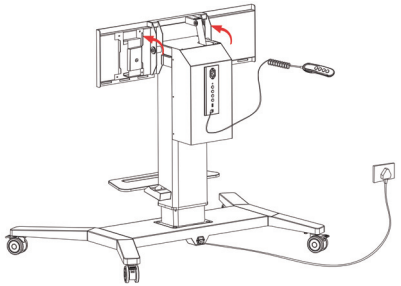

6

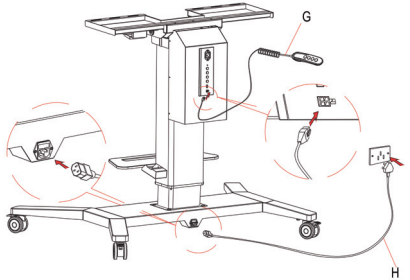

8

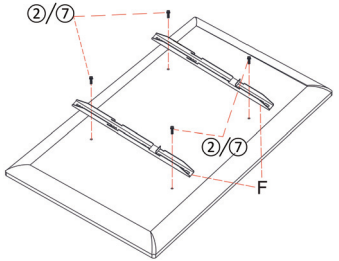

9

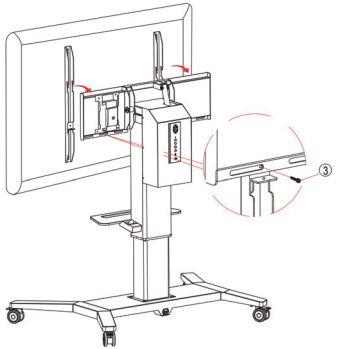

10

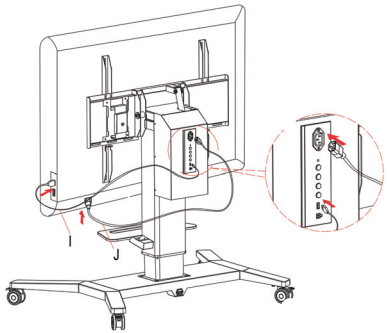

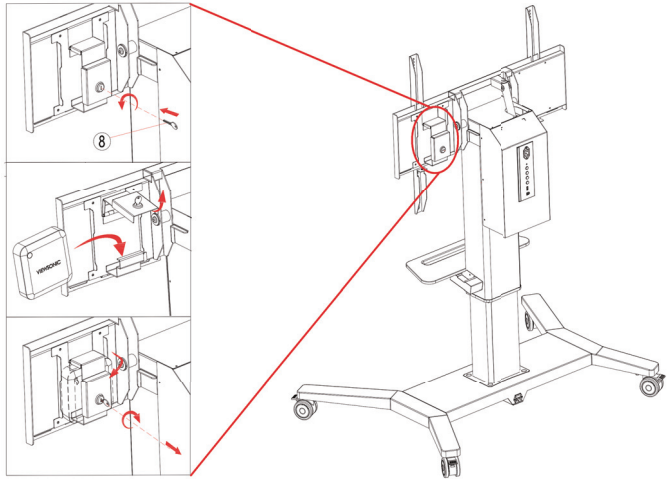

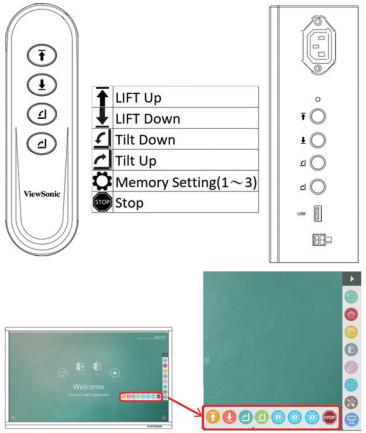

Specifications

Model	VB-STND-003
Model No.	VS17474
Tilt	0° ~ 90°
Swivel	360°
Height adjust range	490 mm 19.29 in
Wall mount pattern	800x600mm max.
Loading	75" max. 100 kg max. 220.46 lb max.
Input voltage	AC-in 100~240V 50/60Hz,1.0A
Control	Physical button control, control pad, software icon
Physical dimensions	1234 x 1149.6 x 844 mm 48.58 x 45.26 x 33.23 in
Net weight	54 kg 119.05 lb
Operation Conditions	Temperature: 32°F to 104°F (0°C to 40°C) Humidity: 20% ~ 80% non-condensing Altitude: ≦2000M
Storage Conditions	Temperature: -4°F to 140°F (-20°C to 60°C) Humidity: 10% ~ 90% non-condensing Altitude: ≦2000M

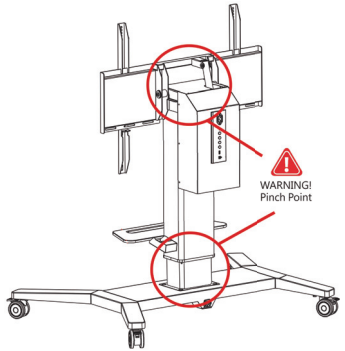

Scan for more information

VB-STND-003

Scan for more information

Support Center

Scan for more information

www.viewsonic.com

ViewSonic Europe Limited
Haaksbergweg 75
1101 BR Amsterdam
Netherlands
+31 (0) 650608655
EPREL@viewsoniceurope.com
https://www.viewsonic.com/eu/

VB-STND-003_QSG_1d_20241002_ENG
Copyright © 2024 ViewSonic Corporation. All rights reserved.