VIEWBOARD

IFP6550-2

Key **Features**

- Ultra fine touch technology enables real-time response dual-pen writing with a 3mm diameter pen tip
- 2.1 Stereo sound with a built-in woofer
- Built-in myViewBoard™ whiteboarding software to collaborate on the go
- 4-way split screen content sharing with built-in ViewBoard® Cast software
- SmartPort™ shared front USB ports for internal & external PCs

Product **Description**

The ViewBoard® IFP50 series embraces ultra fine touch technology to offer fine precision writing. Along with slim IR touch and its optimized integration, the processing time is faster than traditional IR panels. Meanwhile, smooth dual-pen writing with our new, slim 3mm pens enables teachers and students to work efficiently on any detailed tasks that require the accurate use of fine tipped pens during group discussion. On top of that, the ViewBoard® IFP50 series is designed with a slim bezel to broaden your viewing experience, so that even at the edge you can write clearly and thinly. It is also well integrated with myViewBoard™ whiteboarding software to collaborate on the go, and further complimented by ViewBoard® Cast software for 4 way split screen content sharing.

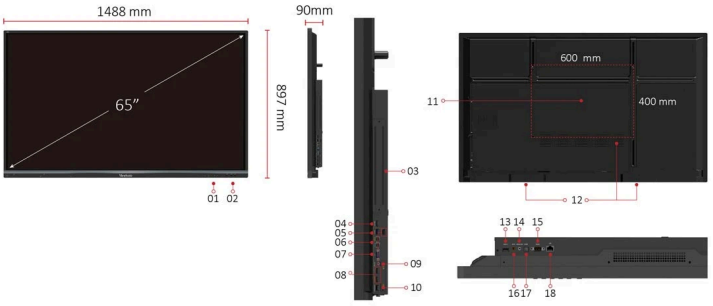

1. MENU CONTROLS
2. USB X 3
3. Intel Unite® Certified OPS Slot
4. HDMI OUT
5. USB 3.0
6. TOUCH X 2
7. VGA
8. HDMI IN X 3
9. AUDIO IN
10. CAMERA PORT
11. VESA® WALL Mount 600x400 mm
12. INTERNAL SPEAKERS
13. USB 2.0
14. AUDIO OUT
15. RS232
16. AV IN
17. SPDIF
18. LAN

Visit Us www.viewsonic.com

DISPLAY

Panel Size:	65"
Type/Tech:	TFT LCD Module with DLED Backlight.
Display Area (mm):	1431 (H) x 807 (V) (64.5" diagonal)
Aspect Ratio:	16:9
Native Resolution:	UHD 3840x2160(Pixels)
Colours:	1.07B colours (10bit)
Brightness:	350 nits (typ.) 300 nits (min.)
Contrast Ratio:	5000:1 (DCR)
Response Time:	8ms
Viewing Angles:	H = 178, V = 178 typ.
Backlight Life:	30,000 Hours (Min)
Surface Treatment:	Anti-Glare
Bezel:	Slim
Orientation:	Landscape

PLATFORM

Processor:	ARM Cortex A73 dual-core 1.2GHz
RAM:	2GB DDR4
Storage:	16GB

TOUCH

Type/ Tech:	IR Recognition
Touch Resolution:	32767 x 32767
Touch Point:	20 points touch, 10 points writing

INPUT

HDMI:	2.0 x3 (3840x2160 @60Hz)
RGB / VGA:	x1
Audio:	x1 (PC audio in)
CVBS:	x1
RS232:	x1
OPS:	x1 PC Slot (proprietary)

OUTPUT

HDMI:	x1
Audio:	x1 (Earphone out)
SPDIF:	1(optical)

LAN

RJ45:	x1

USB

Type A:	USB 2.0 x4(including 2 USB port in front) USB 3.0 x2(including 1 USB port in front)
Type B:	x2, for touch

SPEAKERS

SPEAKERS:	10W x 2 + 15W x 1

EMBEDDED OS

Embedded OS:	Android 7

USB SUPPORTED FILE FORMAT

USB SUPPORTED FILE FORMAT:	Picture - BMP, JPEG, PNG Video - Codec: MPEG1, MPEG2, MPEG2-PS, MPEG4, MKV Container: MPG, MP4, MOV, VOB, DAT, MKV Audio - Codec: AAC, HEAAC, MPEG1, MPEG2 Container: AAC, M4A, MP3

BUNDLE SOFTWARE

Basic Annotation Software:	myViewBoard
Pro Annotation Software:	myViewBoard for windows (Embedded in Windows Slot-in PC)
Wireless Presentation with Touch Feedback: Viewboard Cast:	yes
ViewSonic Launcher:	Embedded

SPECIAL FEATURES

All-in-one USB port (combine Windows/Android USB port; no need to distinguish them anymore):	Front "SmartPort™ USB" to all channels.
Simple LAN sharing between IFP and slot-in device:	Yes

POWER

Voltage:	100-240VAC +/- 10% Wide Range
Consumption:	104W (Typ.) < 0.5 W ("Off")

ERGONOMICS

Wall Mount (VESA®):	600 x 400

OPERATING CONDITIONS

Temperature (º C):	0°C to 40°C
Humidity:	10% ~ 90% RH non-condensing

DIMENSIONS (W X H X D)

Physical (inch / mm):	58.6 x 35.3 x 3.5 in / 1488 x 897 x 90 mm
Packaging (inch / mm):	65.7 x 39.8 x 8.8 in / 1669 x 1010 x 223 mm

WEIGHT

Net (lb / kg):	88.85 lb / 40 Kg
Gross (lb / kg):	102.63 lb / 47 Kg

REGULATIONS

REGULATIONS:	FCC, cTUVus, CB, CE, BSMI, RCM, BIS, EAC

ENERGY STAR VERSION

Energy Star version:	ES8.0

EEI RATING

EEI rating:	A+

PACKAGE CONTENTS

PACKAGE CONTENTS:	1. Power cable (3 meters) x 4 2. Remote control 3. USB cable (3 meters) 4. AV cable 5. Touching pen x 2 6. Quick Start Guide 7. RS232 adapter 8. Clamp x 5 9. Plate 10. Screw x 8 11. HDMI cable

COMPATIBLE SLOT-IN PC

Compatible Slot-in PC:	VPC14-WP series VPC10-WP series VPC15-WP series VPC16-WP series VPC17-WP series

Copyright © ViewSonic Corporation 2000-2026. All rights reserved.