SMART Board MX (V5) Plus series interactive displays

Models:
SBID-MX2xxP-V5

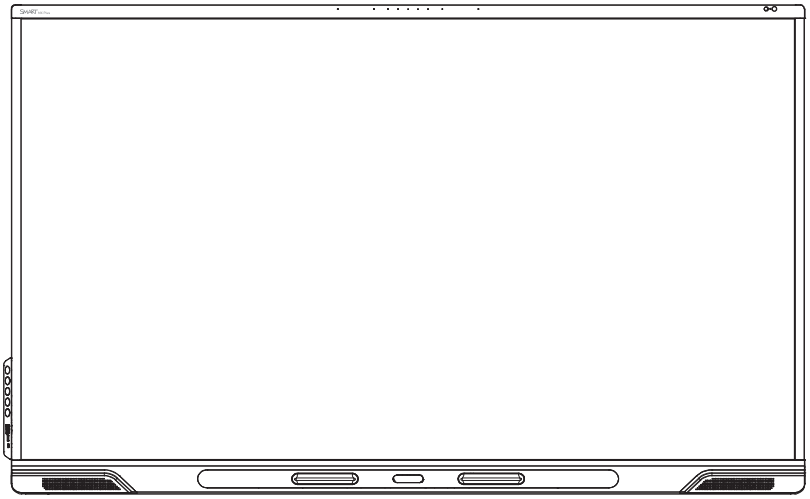

Printed in: CN 1043537 Rev 02

Do not move or mount the interactive flat panel by connecting rope or wire to its handles. Because the interactive flat panel is heavy, rope, wire or handle failure could lead to personal injury.
Use only VESA®-approved mounting hardware.

Flyt eller monter ikke den interaktive fladskærm ved at binde reb eller wire til håndtagene. Da den interaktive fladskærm er tung, kan der ske personskade, hvis rebet, wiren eller håndtagene svigter.
Brug kun VESA-godkendt monteringshardware.

Bewegen oder montieren Sie das Interactive Flat Panel nicht, indem Sie ein Seil oder einen Draht an dessen Handgriffen befestigen. Da das Interactive Flat Panelschwer ist, kann ein Versagen des Seils oder ein Brechen der Griffe zu Verletzungen führen.
Verwenden Sie ausschließlich von VESA genehmigte Montageele mente.

No mueva ni monte la pantalla plana interactiva utilizando cuerdas o alambre en sus asas. Como la pantalla plana interactiva es pesada, si se rompe o daña la cuerda o el alambre, se podrían producir lesiones personales.
Utilice únicamente herramientras de montaje aprobadas por VESA.

Älä siirrä tai kiinnitä interaktiivista laajakuvanäyttöä yhdistämällä köyttä tai vaijeria sen kahvoihin. Koska interaktiivinen laajakuvanäyttö on painava, köyden, vaijerin tai kahvan rikkoutuminen saattaa aiheuttaa henkilövahinkoja.
Käytä vain VESA-hyväksyttyjä kiinnitysvälineitä.

Ne déplacez pas et ne fixez pas l'écran plat interactif en attachant des cordes ou des câbles à ses poignées. Étant donné le poids de l'écran plat interactif, si une corde, un câble ou une poignée lâche, vous risquez de vous blesser.
Utilisez uniquement des équipements de fixation approuvés par VESA.

Non spostare o montare lo schermo piatto interattivo agganciando una corda o un cavo alle maniglie. Poiché lo schermo piatto interattivo è pesante, la rottura della corda, del cavo o della maniglia potrebbe provocare lesioni personali.
Utilizzare solo componenti di montaggio con approvazione VESA.

Bevestig geen touw of draad aan de handvatten om het interactieve flatpanel te verplaatsen of bevestigen. Omdat het interactieve flatpanel zwaar is, kunt u door het breken van het touw of draad letsel oplopen.
Gebruik alleen VESA-goedgekeurde apparatuur.

Du må ikke flytte eller montere det interaktive flatpanelet ved å feste et tau eller en vaier i håndtakene. Fordi det interaktive flatpanelet er tungt, kan svikt i tauet, vaieren eller håndtaket føre til personskader.
Bruk kun VESA-godkjent monteringsutstyr.

Не перемещайте и не устанавливайте интерактивный дисплей с помощью каната или провода, продетого в его ручки. Несоблюдение этих инструкций может привести к травмам и повреждению оборудования, поскольку интерактивный дисплей очень тяжелый.
Используйте одобренное компанией VESA оборудование для монтажа.

Flytta eller montera inte den interaktiva platta skärmen genom att fästa ett rep eller ståltråd i dess handtag. Eftersom den interaktiva platta skärmen är tung, kan repet, ståltråden och handtaget lossna och leda till personskada.
Använd endast VESA-godkänd monteringshårdvara.

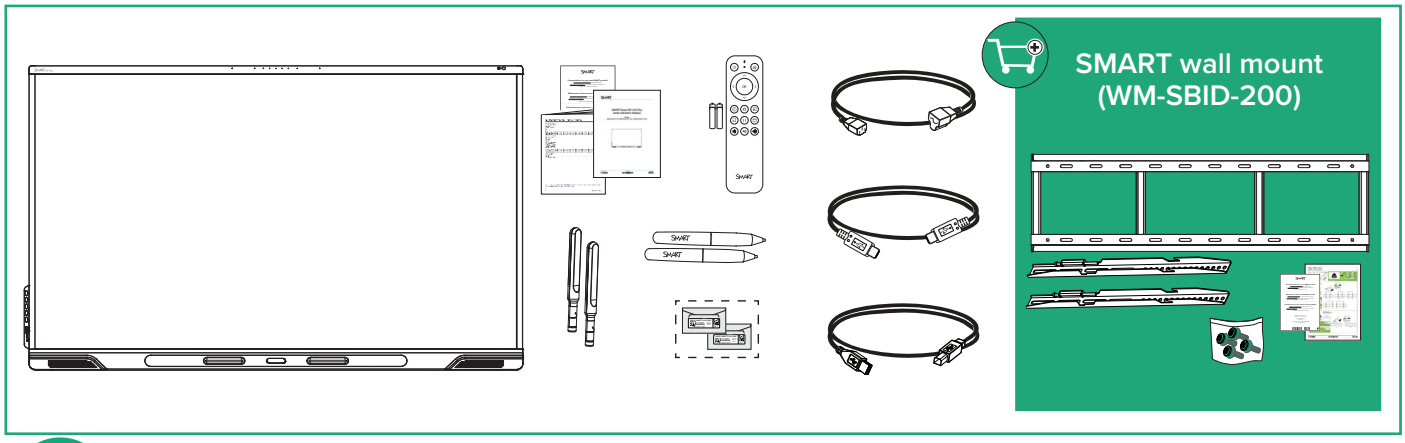
SMART wall mount
(WM-SBID-200)

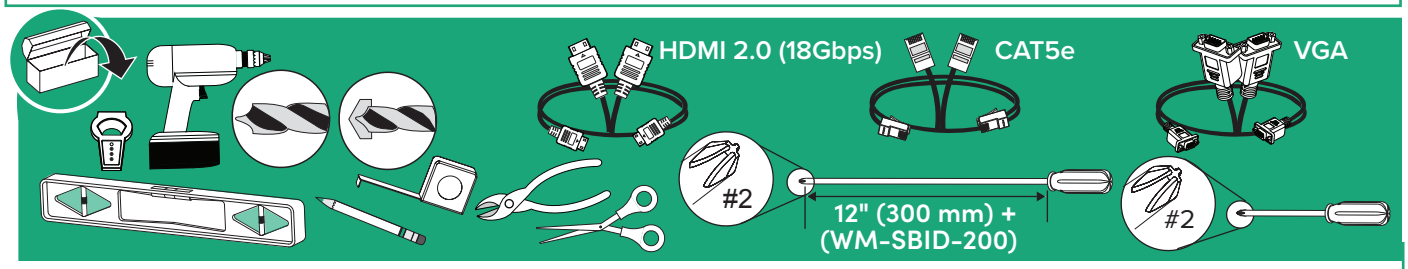
HDMI 2.0 (18Gbps)
CAT5e
VGA
#2
12" (300 mm) +
(WM-SBID-200)
#2

1

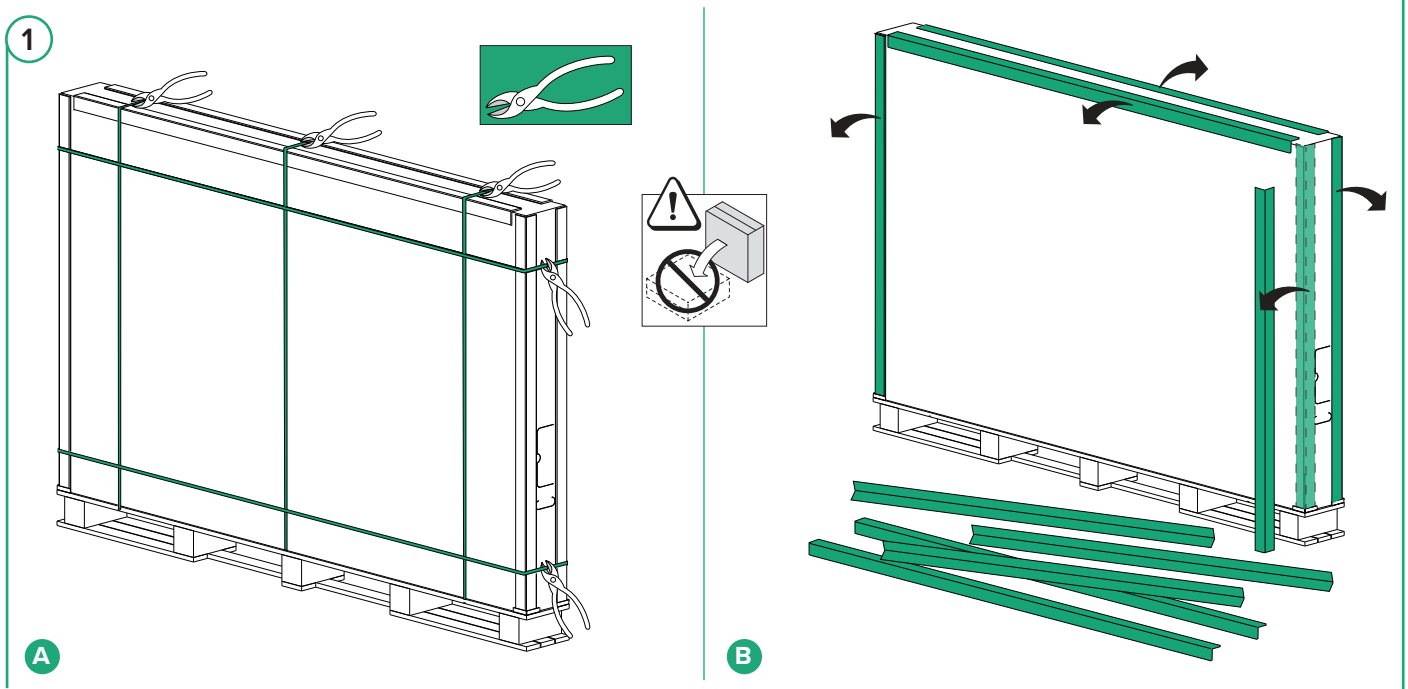
A
B

2

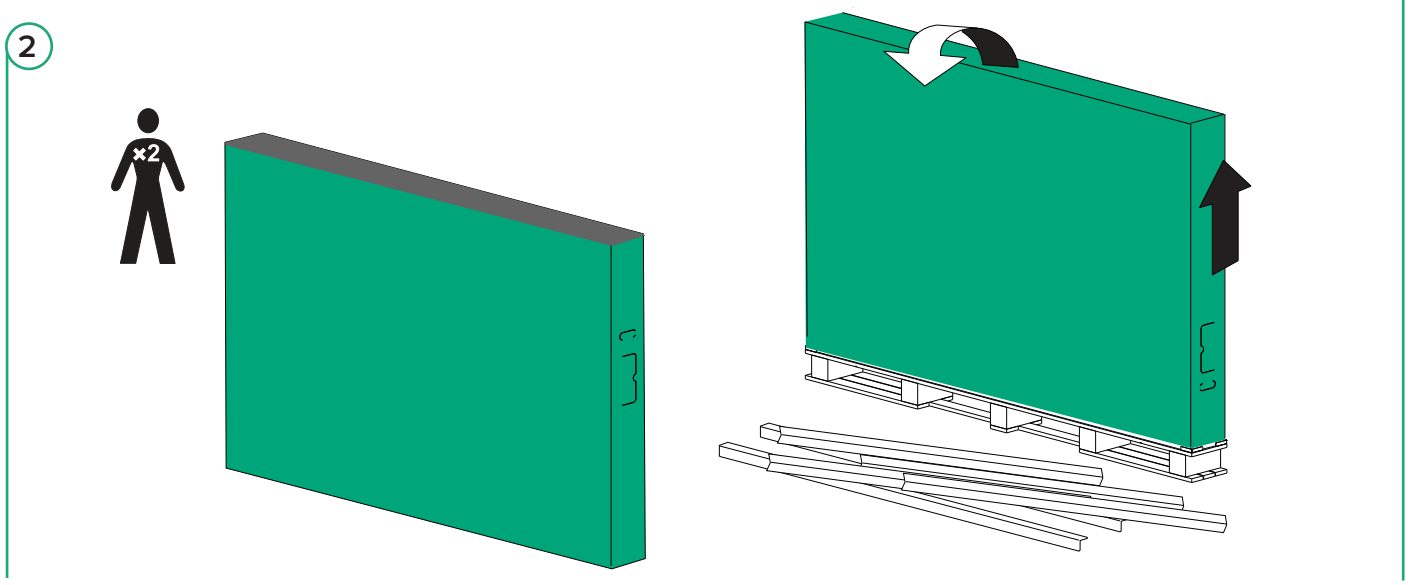
×2

3

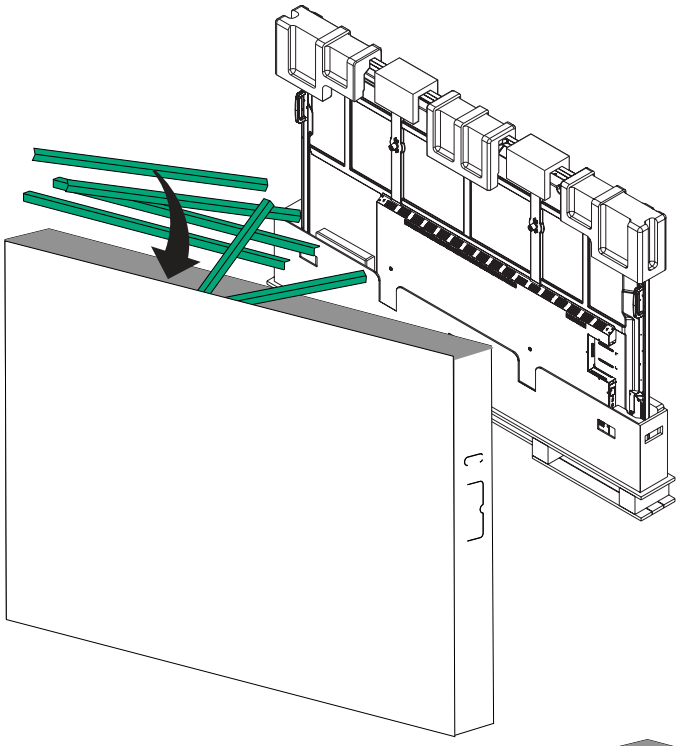

A

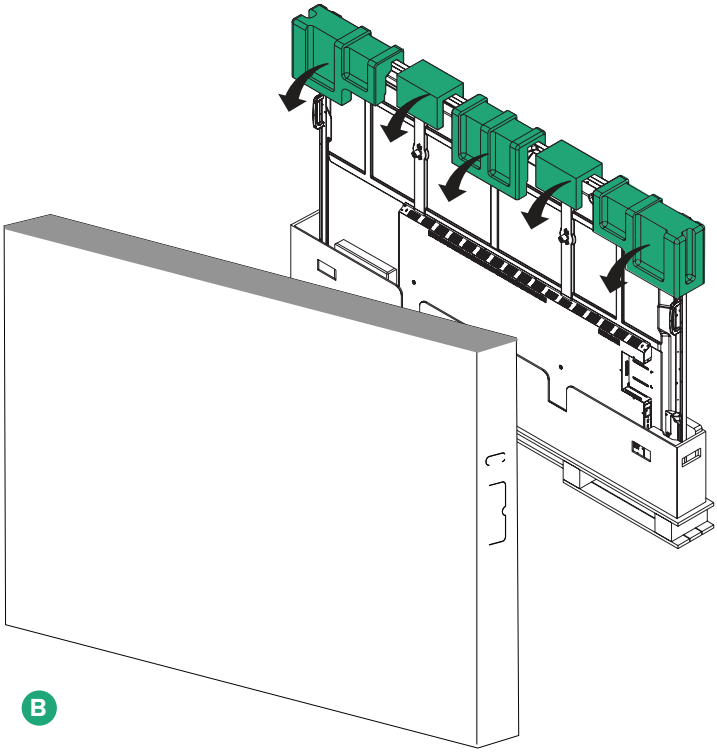

B

4

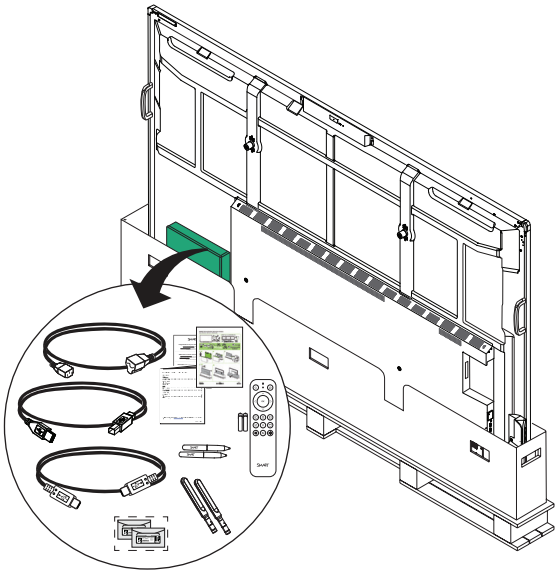

5

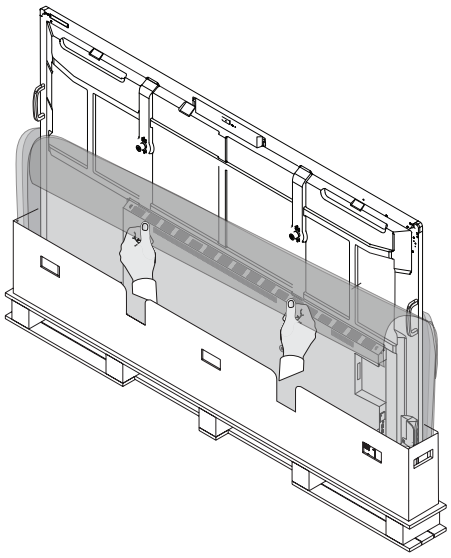

6

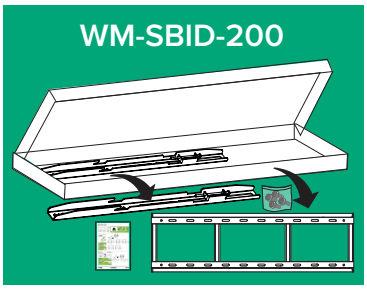

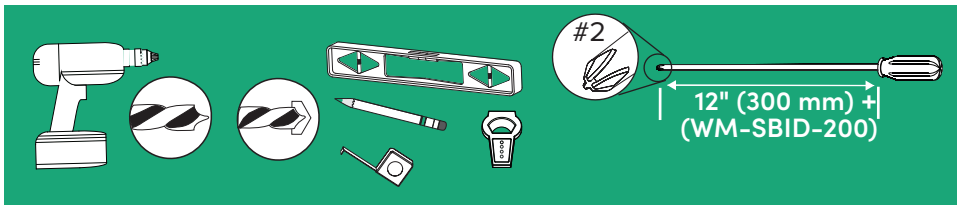

SBID-MX265P-V5

A	23 5/8" (60 cm)
B	9 3/8" (24 cm)
C	15 3/4" (40 cm)
D	12 3/8" (32 cm)

SBID-MX275P-V5

A	31 1/2" (80 cm)
B	8 5/8" (22 cm)
C	15 3/4" (40 cm)
D	13 5/8" (35 cm)

SBID-MX286P-V5

A	31 1/2" (80 cm)
B	12" (31 cm)
C	23 5/8" (60 cm)
D	21" (51 cm)

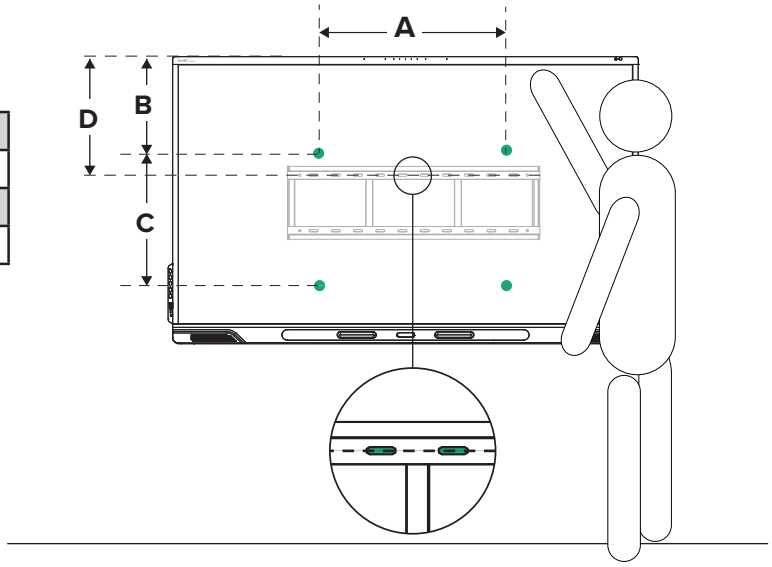

A

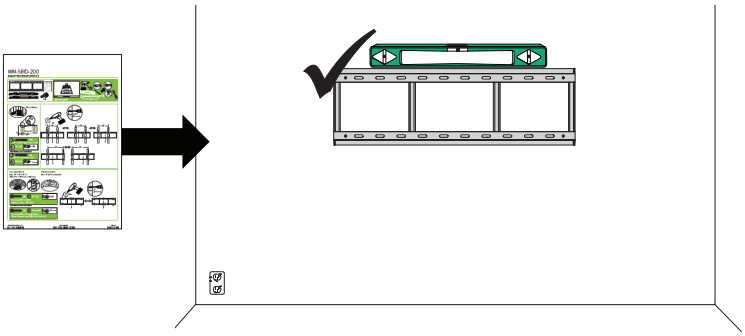

B

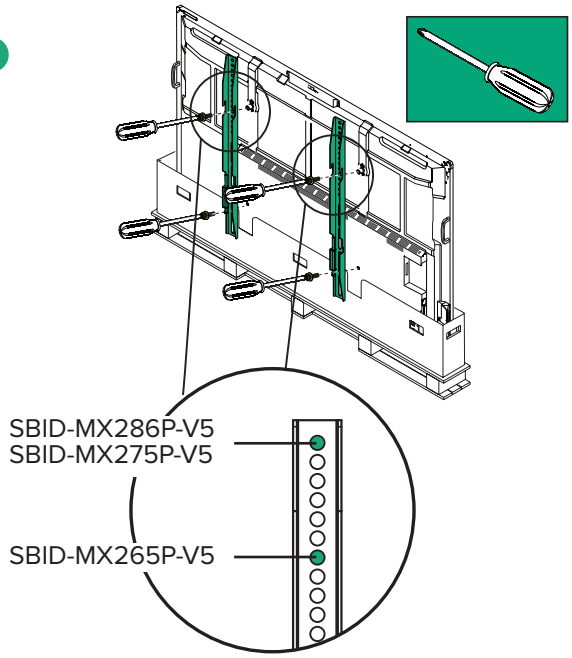

7

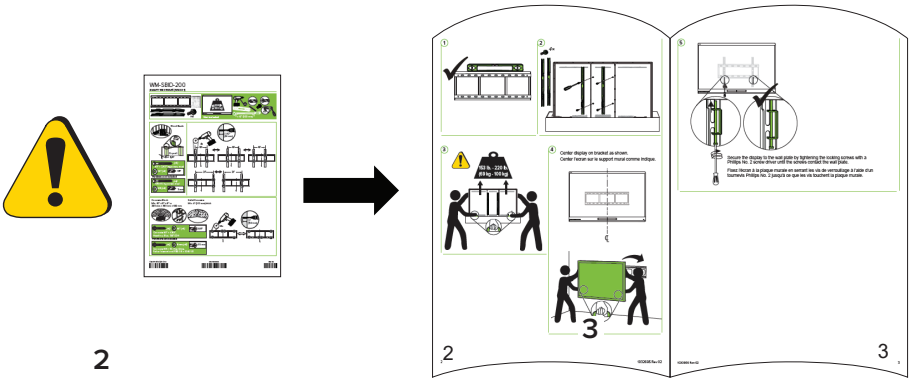

8

SBID-MX2xxP-V5

A

SBID-MX265P-V5

SBID-MX275P-V5

SBID-MX286P-V5

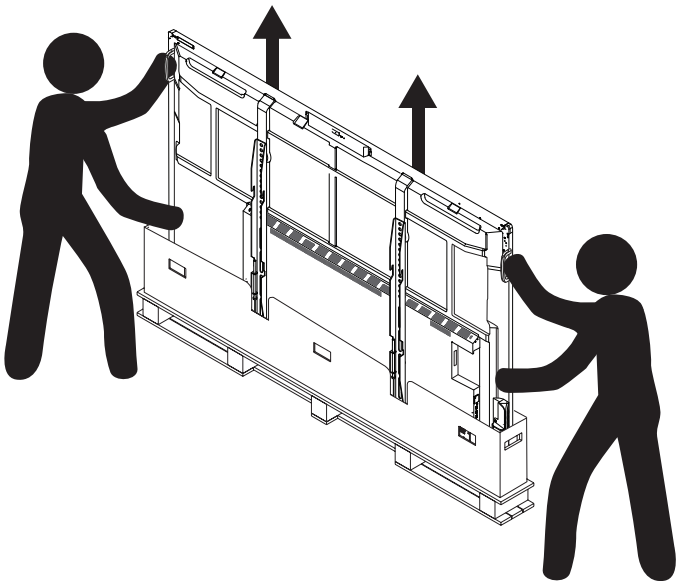

B

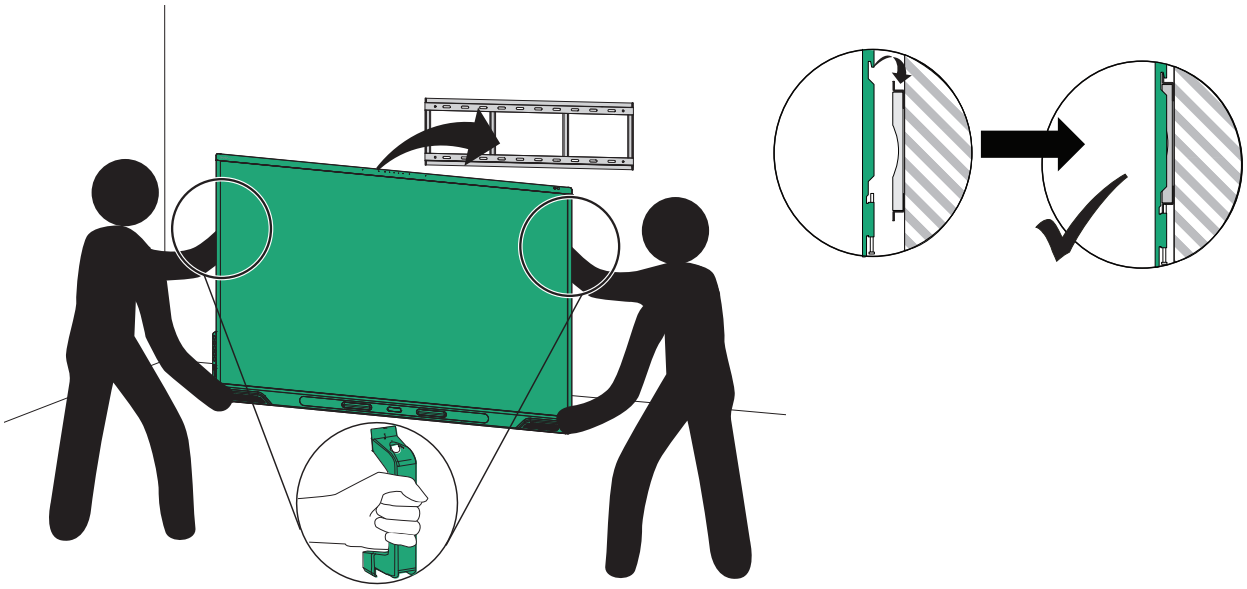

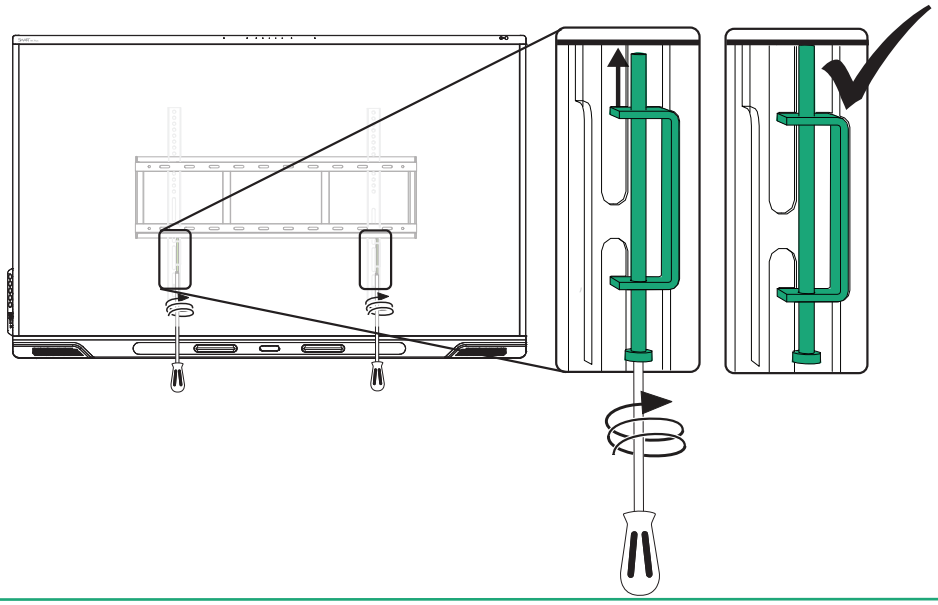

9

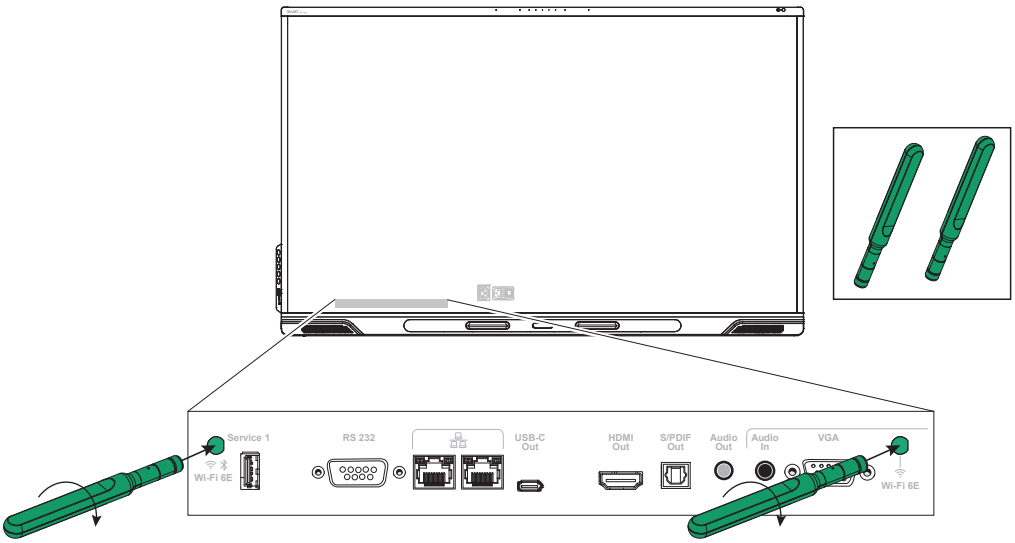
Service 1
RS 232
USB-C Out
HDMI Out
S/PDIF Out
Audio Out
Audio In
VGA
Wi-Fi 6E
Wi-Fi 6E

10

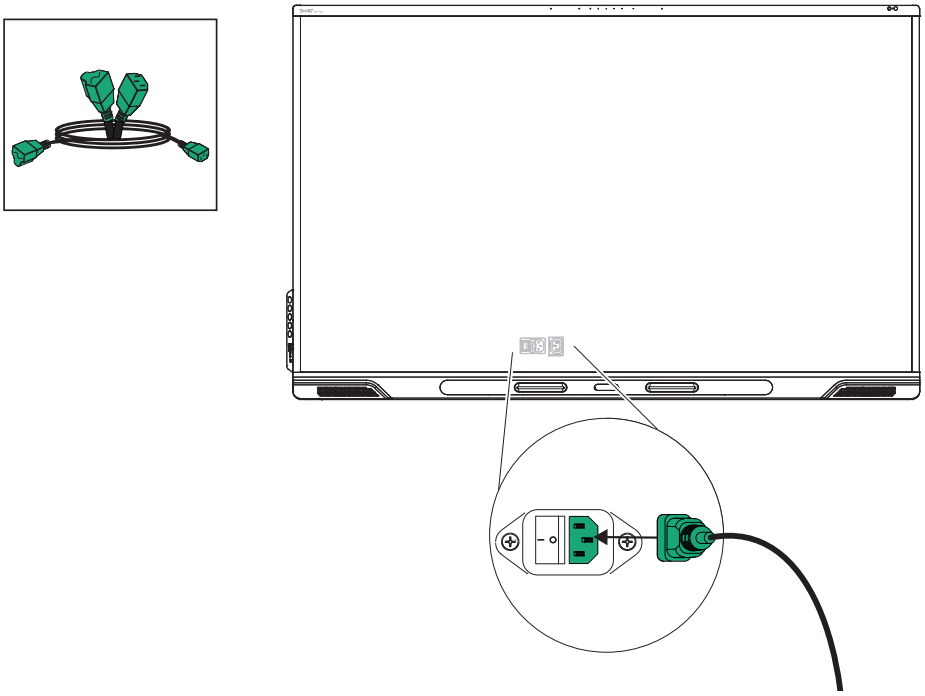

11

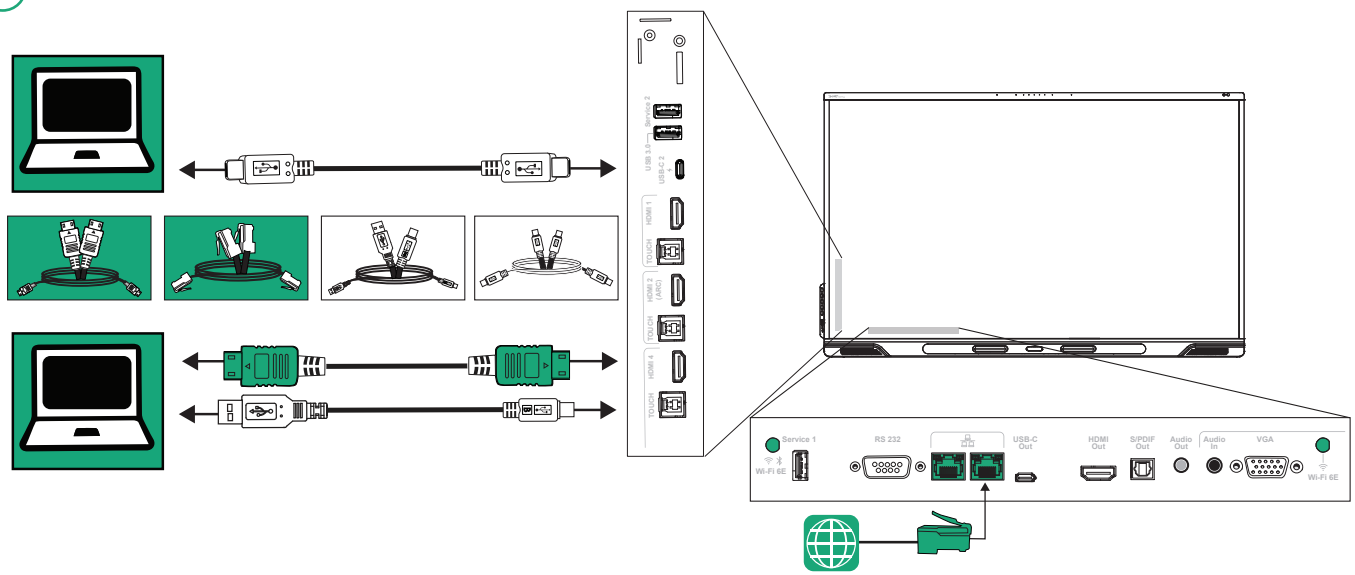
Service 1
RS 232
USB-C Out
HDMI Out
S/PDIF Out
Audio Out
Audio In
VGA
Wi-Fi 6E
Wi-Fi 6E

12

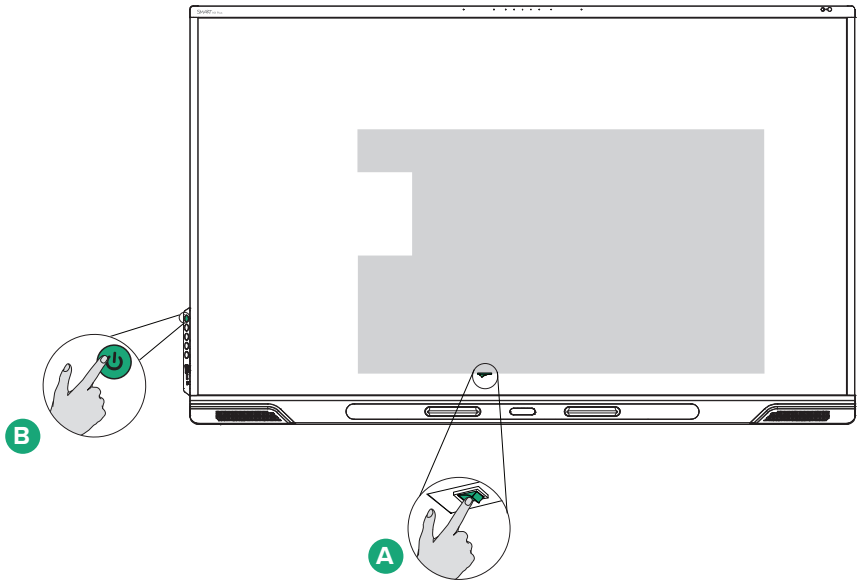

13

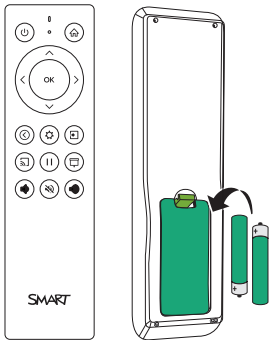

14

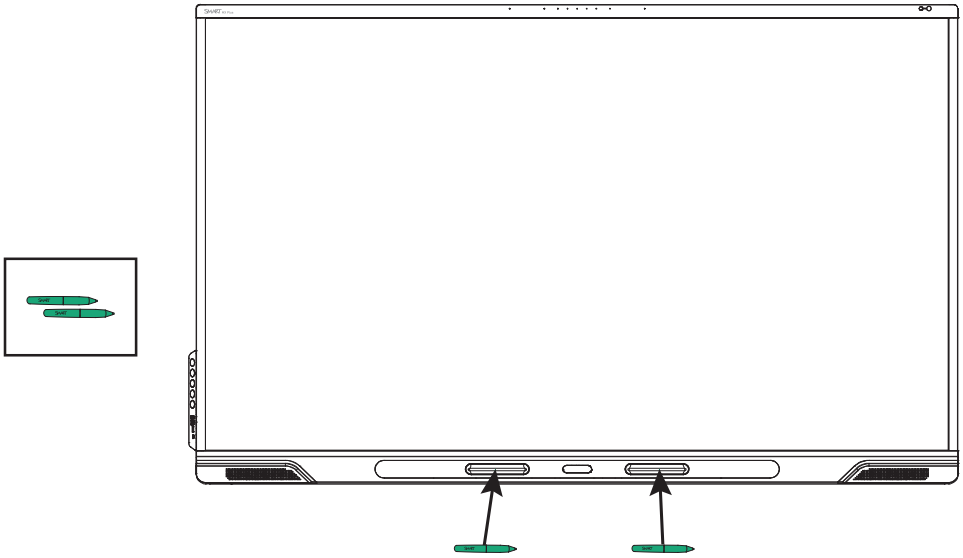

Was this document helpful?
smarttech.com/docfeedback/172022

The terms HDMI, HDMI High-Definition Multimedia Interface, HDMI trade dress and the HDMI Logos are trademarks or registered trademarks of HDMI Licensing Administrator, Inc.

For purposes of certification the MX (V5) Plus Series of displays are individually identified as IDQR65-A, IDQR75-A and IDQR86-A.

EUROPE

EU and UK Declaration of Conformity

Hereby, SMART Technologies ULC declares that the radio equipment type Interactive Display, regulatory models IDQR65-A, IDQR75-A, and IDQR86-A are in compliance with Directive 2014/53/EU and UK Radio Equipment Regulations 2017. The full text of the EU and UK declaration of conformity is available at the following internet address: www.smarttech.com/compliance

The frequency band and the maximum transmitted power are:

- 13.56 MHz: 0.0007 uW (ERP)
- 2400 MHz - 2483.5 MHz: 19.5 dBm (EIRP)
- 5150 MHz - 5350 MHz: 19.7 dBm (EIRP)
- 5470 MHz - 5725 MHz: 19.3 dBm (EIRP)
- 5725 MHz - 5825 MHz: 13.3 dBm (EIRP)
- 5925 MHz - 6425 MHz: 18.9 dBm (EIRP)

AT	BE	BG	CH	CY	CZ	DE	DK	EE
EL	ES	FI	FR	HR	HU	IE	IS	IT
LI	LT	LU	LV	MT	NL	NO	PL	PT
RO	SE	SI	SK	TR	UK(NI)			

	UK

Restrictions: 5150 MHz - 5350 MHz and 5925 MHz - 6425 MHz are for indoor use only.

Class A products for EU: This product is intended for use in a non-residential environment. The product does not have AM/FM broadcast receiver function.

Caution: Exposure to Radio Frequency Radiation This equipment complies with EU radiation exposure limits set forth for an uncontrolled environment. This equipment should be installed and operated with minimum distance 20 cm between the radiator and your body.

EU
SMART Technologies (Germany),
Gustav-Heinemann-Ufer, 72 c
50968 Koln, Germany

UK
SMART Technologies (GB) Limited
27-28 Eastcastle Street
London, United Kingdom W1W 8DH

Hardware environmental compliance

SMART Technologies supports global efforts to ensure that electronic equipment is manufactured, sold and disposed of in a safe and environmentally friendly manner.

Waste Electrical and Electronic Equipment (WEEE Directive)

Electrical and electronic equipment contain substances that can be harmful to the environment and to human health. The crossed-out wheeled bin symbol indicates that products should be disposed of in the appropriate recycling stream and not as regular waste.

Batteries (Battery Regulation)

CE

The product contains a coin cell battery (Not user accessible). The remote contains two AAA batteries. Recycle or dispose of batteries properly.
Perchlorate material The coin cell battery contains perchlorate material. Special handling may apply. See dtsc.ca.gov/hazardouswaste/perchlorate.

The following information is required for certain products placed on the market in the United States to comply with Reese's Law:

⚠ WARNING

- **INGESTION HAZARD:** This product contains a button cell or coin battery.
- **DEATH** or serious injury can occur if ingested.
- A swallowed button cell or coin battery can cause **Internal Chemical Burns** in as little as **2 hours.**
- **KEEP** new and used batteries **OUT OF REACH of CHILDREN.**
- **Seek immediate medical attention** if a battery is suspected to be swallowed or inserted inside any part of the body.
- The 3V, CR1220 battery in this product is not user replaceable.

WARNING: The coin cell battery installed in this product is not intended for user replacement. The following statements apply if the battery is replaced:

- Remove and immediately recycle or dispose of used batteries according to local regulations and keep away from children. Do NOT dispose of batteries in household trash or incinerate.
- Even used batteries may cause severe injury or death.
- Call a local poison control center for treatment information.
- Replace only with a type CR1220 battery, this is nominally a 3V battery.
- Non-rechargeable batteries are not to be recharged. The CR1220 battery is non-rechargeable.
- Do not force discharge, recharge, dissemble, heat above 100°C or incinerate. Doing so may result in injury due to venting, leakage or explosion resulting in chemical burns.

support.smarttech.com
support.smarttech.com/contact-support

SMART Board® SMART®

© 2025 SMART Technologies ULC. All rights reserved. SMART Board, smarttech, the SMART logo and all SMART taglines are trademarks or registered trademarks of SMART Technologies ULC in the U.S. and/or other countries. All other third-party product and company names may be trademarks of their respective owners. Contents are subject to change without notice. This product and/or use thereof covered by one or more of the following U.S. patents; smarttech.com/patents.
April 2025.

1043537 Rev 02

http://smarttech.com/kb/172022