Was this document helpful?
smarttech.com/docfeedback/171889

SMART Board ® **MX (V5) series with iQ**

Display

Screen sizes (diagonal)	55" | 65" | 75" | 86"
Backlight	LED
Aspect ratio	16:9
Maximum display resolution	4K UHD (3840 × 2160)
Refresh rate	60 Hz
Minimum lifespan	50,000 hours
Brightness[1]	55": 300 cd/m^2 65", 75", 86": 400 cd/m^2
Viewing angle	178°
Glass	55": Full heat-tempered | Anti-glare | Anti-fingerprint 65", 75", 86": Full heat-tempered | Anti-glare | Anti-fingerprint | Bonded
Frame color	White
Convenience buttons	Power | Home | Volume | Input select | Screen shade | Freeze frame
Sensors	Proximity[2] | Ambient light | Infrared
Audio	55": 2 integrated 15 W speakers 65", 75", 86": 2 integrated 20 W speakers Integrated linear six-microphone array with support for onboard acoustic echo cancellation
NFC	Integrated RFID NFC reader/writer CCID (chip card interface device) when used with a native operating system driver for Windows®, Linux®, or Mac Supported protocols: ISO 14443A/B, ISO 15693, NFC Tag 1-4

Interactive experience

Touch technology	HyPr Touch™ with Advanced IR
Touch features	Simultaneous tool differentiation Object Awareness™
Typical touch response time	≤ 5 ms
Accuracy	1 mm
Minimum object size	2 mm
Multitouch capabilities	50 – Windows® 50 – Mac 32 – Android™ 16 – Chrome OS™
Tools included	Pens (×2)
Tool holders	Magnetic | Frame-mounted

Software

Included	iQ embedded Android™ OS SMART Notebook® SMART Control[3]
Optional	SMART Notebook Plus Lumio™ SMART Control Signage

[1] Brightness of individual displays can vary.
[2] Only available on some models

[3] SMART Control is integrated into the display. CAP Emergency alerts integration, Device management, on-demand messaging and content broadcasting are included for the life of the display.

iQ embedded Android OS

Operating system	Android version 15 Supports an automatic update to Android 17
CPU	Octa-core
Memory	8 GB DDR4
OS architecture	64-bit
Storage	64 GB (up to 576 GB)
User interface	4K UHD (3840 × 2160)
Digital whiteboard	✓
Web browser	✓
Screen sharing	✓
Google Play™ Protect Certified	✓
Google Play Store	✓
Other features	Personalized home screen and settings Input select Split screen Picture-in-picture (PIP) with touch pass-through Interactive widgets Templates, graphic organizers, and manipulatives File and app libraries
Ability to run third-party applications	✓
Cloud storage access	✓
NFC sign in to a SMART Account	✓
Device-based sign in to a SMART Account	✓
Languages supported	Arabic | Basque | Catalan | Chinese (Simplified) | Chinese (Traditional) | Czech | Danish | Dutch | English (UK) | Estonian | Finnish | French | Gaelic | Galician | German | Greek | Hindi (India) | Hungarian | Italian | Japanese | Kazakh | Korean | Latvian | Lithuanian | Norwegian (Bokmål) | Polish | Portuguese (Brazil) | Portuguese (Portugal) | Romanian | Russian | Slovak | Slovenian | Spanish (Latin America) | Spanish (Spain) | Swedish | Turkish | Ukrainian | Vietnamese | Welsh
Updates	Automatic over-the-air (OTA)

PC computing

OPS support[4]	SMART PCM modules
PC module power supported OPS	85 W
Optional computing module	See › smarttech.com/accessories

Inputs	Front	Back
OPS PC accessory slot	–	1
microSD slot with security cover	–	1
HDMI® 2.1 4K @ 60Hz with HDCP 1.4, HDCP 2.3, ARC, and eARC support[5]	1	3
VGA video	–	1
Stereo 3.5 mm (variable)	–	1
RS-232 (DB-9 connector)	–	1
RJ45 (LAN In)	–	1
USB Type-C 4K @ 60Hz Display Port 1.2, HDCP 2.3 and HDCP 1.3, USB 2.0 (UFP) for touch and digital audio, USB 3.2 Gen 1 (DFP) for peripherals; 27 W power delivery	1	–
USB Type-C, 4K @ 60Hz, Display Port 1.2, USB 2.0 (UFP) for touch and digital audio, USB 3.2 Gen 1 (DFP) for peripherals; 65W power delivery	–	1
USB 2.0 Type-A	–	1
USB 3.2 Gen 1 Type-A	2	2
USB 3.2 Gen 1 Type-B	1	3

Outputs	Front	Back
HDMI 2.1 4K @ 60Hz with HDCP 2.3 support	–	1
USB Type-C 4K @ 60Hz DisplayPort 1.4a, HDCP 2.3 and HDCP 1.3, USB 3.2 Gen 1 (DFP) for touch ingest and peripherals; 4.5 W power delivery	–	1
Stereo 3.5 mm (variable)	–	1
S/PDIF optical (fixed)	–	1
RJ45 (LAN Out)	–	1

[4]The support and performance of third-party OPS (Open Pluggable Specification) and OPS-C modules may vary. Conduct proper compatibility testing to avoid potential issues.

[5]ARC and eARC support are available only with the HDMI 2 input.

Included cables and accessories	Qty
Country-specific power cable	1
16' 5" (5 m) USB 2.0 A to B cable	1
6' (1.8 m) USB 3.2 Gen 1 Type-C cable, 5A	1
Pens	2
External tri-band Wi-Fi (2.4, 5, and 6-7.2 GHz) and Bluetooth® (2.4 GHz) antennas	2
Remote control	1
AAA batteries	2
SMART ID cards (for NFC sign in to a SMART Account)	2
Illustrated installation instructions	1
Important information document	1

Connectivity

Wired	RJ45 (×2) 1000BASE-T
Wi-Fi	IEEE 802.11ax (Wi-Fi 6e) supporting WPA, WPA2, WPA3 PSK, and 802.1X EAP authentication protocols
Bluetooth	5.2 dual mode

Storage and operating requirements

Power requirements	100V to 240V AC, 50 Hz to 60 Hz
Operating temperature	41–95°F (5–35°C)
Storage temperature	-4–140°F (-20–60°C)
Humidity	5–80% relative humidity, non-condensing

Power consumption

Typical	55": 72 W 65": 90 W 75": 103 W 86": 149 W
Standby	0.2 W

Certification and compliance[6]

Regulatory models	IDX55-5 | IDX65-5 | IDX75-5 | IDX86-5
US / Canada	UL | FCC | ISED | TSCA | CONEG Packaging | Proposition 65
EU / EEA / EFTA / UK	CE | UKCA | LVD | CB | EMCD | RED | REACH | RoHS | Battery | WEEE | Packaging | POP | Ecodesign
Australia / New Zealand	RCM | RSM
Performance standards	ENERGY STAR® | HDMI | HDCP | EPEAT

Purchasing information[7]

Order numbers

MX255-V5	SMART Board® MX055-V5 interactive display with iQ
MX265-V5	SMART Board MX065-V5 interactive display with iQ
MX275-V5	SMART Board MX075-V5 interactive display with iQ
MX286-V5	SMART Board MX086-V5 interactive display with iQ

Optional accessories

WM-SBID-200	SMART Wall Mount for SMART MX series interactive displays
SWC-120UHD	SMART Ultra HD Camera 120
SMS-TE-IQ4	SMART MultiStylus with Tool Explorer (V2) Technology accessory kit
SND-FL	SMART SoundFlow audio broadcasting system
SND-LK	SMART SoundLift voice amplification solution
Other accessories	See › smarttech.com/accessories

SMART Warranty

Terms and conditions and warranty upgrade options vary by region. Visit smarttech.com/warranty or contact your reseller for information.

Cable requirements

See › *SMART cables and connectors guide* (docs.smarttech.com/kb/171926)

[6] Product availability may vary by region.

This product has received additional certifications not listed here.

[7] Order numbers may vary by region.

Installation, dimensions, and weights

Notes

- All dimensions ± 1/8" (0.3 cm). All weights ± 2 lb. (0.9 kg). All dimensions and weight values are preliminary and subject to change.
- Product ships upright.
- Leave space around the display to ensure adequate ventilation.

55" models

Dimensions

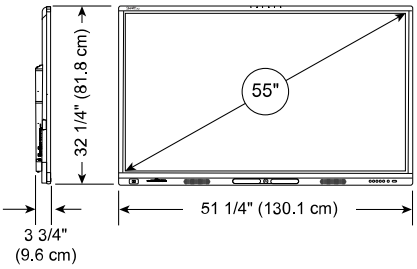

Weight

71 lb. (32 kg)

Shipping dimensions (including pallet)

56 1/8" × 43 3/4" × 6 1/4"
(142.5 cm × 111 cm × 16 cm)

Shipping weight

103 lb. (47 kg)

VESA mount

M8 | 400 × 400 mm

Handles

–

65" models

Dimensions

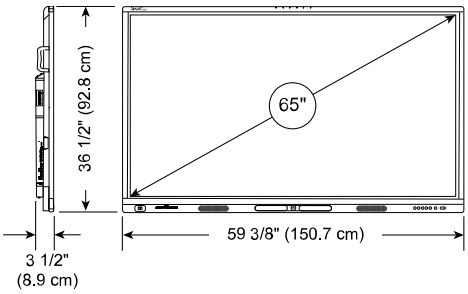

Weight

89 lb. (40 kg)

Shipping dimensions (including pallet)

63 3/4" × 45 7/8" × 6 1/4"
(162 cm × 116.5 cm × 16 cm)

Shipping weight

124 lb. (56 kg)

VESA mount

M8 | 600 × 400 mm

Handles

2

75" models

Dimensions

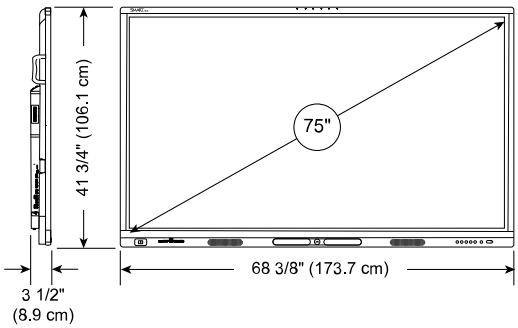

Weight

119 lb. (54 kg)

Shipping dimensions (including pallet)

71 5/8" × 50 5/8" × 6 1/4"
(182 cm × 128.5 cm × 16 cm)

Shipping weight

159 lb. (72 kg)

VESA mount

M8 | 800 × 400 mm

Handles

2

Installation, dimensions, and weights (continued)

86" models

Dimensions

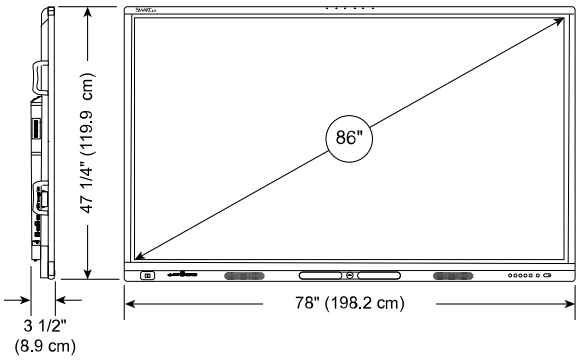

Weight

150 lb. (68 kg)

Shipping dimensions (including pallet)

85 1/4" × 56 7/8" × 6 1/4"
(216.5 cm × 144.5 cm × 16 cm)

Shipping weight

207 lb. (94 kg)

VESA mount

M8 | 800 × 600 mm

Handles

4

smarttech.com
smarttech.com/contact

© 2026 SMART Technologies ULC. All rights reserved. SMART Board, SMART Notebook, Lumio, SMART Ink, HyPr Touch, Simultaneous Tool Differentiation, Object Awareness, Silktouch, smarttech, the SMART logo and all SMART taglines are trademarks or registered trademarks of SMART Technologies ULC in the US and/or other countries. The Adopted Trademarks HDMI, HDMI High-Definition Multimedia Interface, and the HDMI Logo are trademarks or registered trademarks of HDMI Licensing Administrator, Inc. in the United States and other countries. The Bluetooth word mark is owned by the Bluetooth SIG, Inc. and any use of such marks by SMART Technologies ULC is under license. Android and Google Play are trademarks of Google Inc. All other third-party product and company names may be trademarks of their respective owners. This product and/or use thereof is covered by one or more of the following US patents: www.smarttech.com/patents. Contents are subject to change without notice. September 30, 2026.