Promethean®

ActivPanel®

Nickel System Install and User Guide

TP-3026-EN-V04

Copyright information

TP-3026-EN-V04 ©2020 Promethean Limited. All rights reserved.

All software, resources, drivers and documentation supplied in the Promethean ActivInspire download are copyright Promethean Limited 2020. Promethean grants a license to install and use Promethean ActivInspire software, including any resources, drivers and documentation supplied in the download. Refer to the licence agreement for information about the terms and conditions of this licence.

Promethean is owner of a number of trademarks in several jurisdictions across the world. The Promethean products documented in this guide include aspects which are protected under their respective patent, copyright, design copyright, registered design and trademark laws.

The terms HDMI, HDMI High-Definition Multimedia Interface, and the HDMI Logo are trademarks or registered trademarks of HDMI Licensing Administrator, Inc.

VESA is a registered mark of Video Electronics Standards Association.

Apple is a trademark or registered trademark of Apple, Inc. in the United States and other countries. Windows is a registered trademark or trademark of Microsoft Corporation in the United States and other countries. Linux is a registered trademark of Linus Torvalds in the United States and other countries.

All other trademarks remain the property of their respective owners.

This guide is distributed online. It may only be reproduced for use within the institution in which the product is used. For use outside of your institution, no part of this guide may be reproduced, transmitted, stored in a retrieval system or translated into any other language without the prior permission of Promethean Limited.

Please note that the content in this guide is protected under copyright law. Although every care has been taken in the compilation of this guide, Promethean Limited accepts no responsibility for errors or omissions, or for damages resulting from the use of information contained within the following pages.

Table of contents

Copyright information 2

Box contents 5
- ActivPanel 5
- ActivSoundBar 6
- OPS-M 7
- ActivConnect OPS-G 7
- ActivConnect G-Series 8
- Promethean Chromebox 9
- Promethean Wi-Fi module (Nickel & Cobalt) 9

Overview 10
- Interfaces 10
- Controls 20

Installation 23
- Installing accessories 23
- Mounting the ActivPanel on the wall mount 34
- Mounting on the APTMS 38
- Mounting on the APTASBB400-70/90 39

Setup 42
- Installing batteries in the ActivPanel remote control 42
- Switching on the ActivPanel 43
- Setting up the ActivPanel for the first time 44
- Activating the battery in the ActivSoundBar remote control 46
- Connecting the ActivSoundBar 46
- Switching on the ActivSoundBar 47
- Connecting the ActivConnect G-Series 48
- Switching on the OPS-M, ActivConnect OPS-G, and ActivConnect G-Series 49
- Connecting the Promethean Chromebox 50
- Switching on the Promethean Chromebox 50
- Connecting a laptop or desktop computer to the ActivPanel 51
- Selecting an HDMI source on the ActivPanel 52
- Connecting to the Internet on the ActivPanel 53

Operation 55
- Using touch on the ActivPanel 55

About the menu 56
Accessing the menu 57
Opening apps 58
Changing settings 59
Updating the ActivPanel firmware 60

Warranty, registration and support 62
Warranty 62
Registration 62
Support 62

Troubleshooting 63
ActivPanel 63
ActivSoundBar 64

List of serviceable parts 65

Box contents

ActivPanel

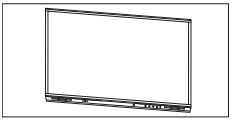
x1

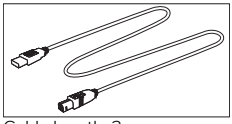
x1
Cable length: 3 m

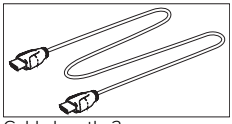
x1
Cable length: 3 m

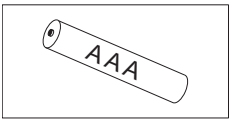

x2

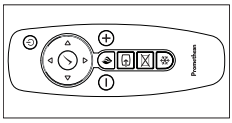
x1

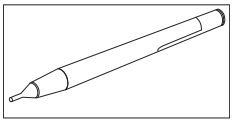
x1

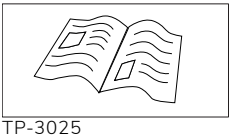
x1
TP-3025

NAM

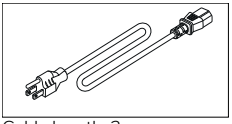
x1
Cable length: 3 m

EMEA

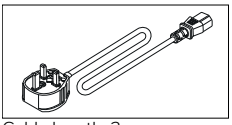
x1
Cable length: 3 m

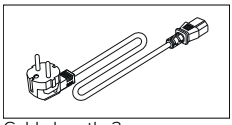
x1
Cable length: 3 m

China

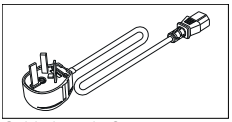
x1
Cable length: 3 m

x1

Saudi Arabia

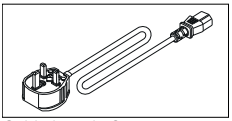
x1
Cable length: 3 m

South Africa

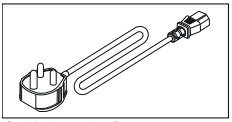
x1
Cable length: 3 m

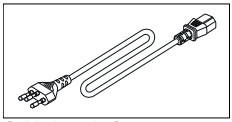
x1
Cable length: 3 m

AUS/NZ

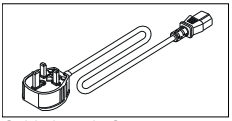
x1
Cable length: 3 m

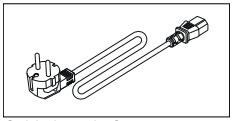
x1
Cable length: 3 m

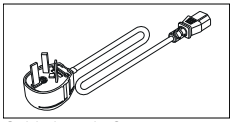
x1
Cable length: 3 m

ActivSoundBar

This product is an optional accessory.

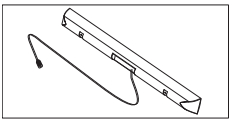
x1

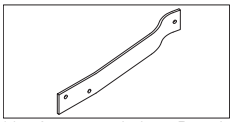
x2
Not for use with ActivPanel

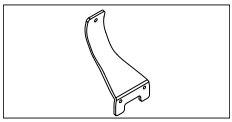
x2

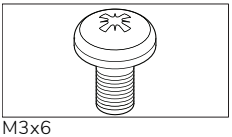
x4
M3x6

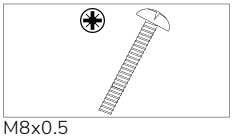
x4
M8x0.5

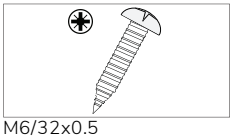
x2
M6/32x0.5

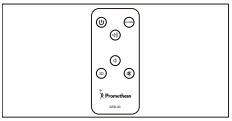
x1

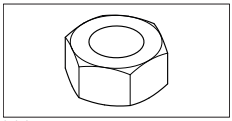
x4
M4

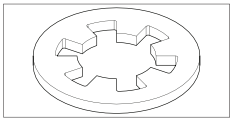
x4

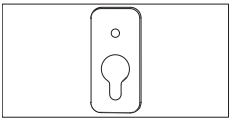
x2

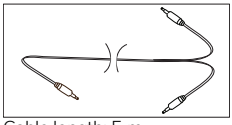
x1
Cable length: 5 m

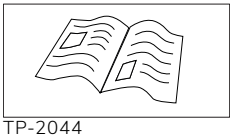
x1
TP-2044

EMEA/USA

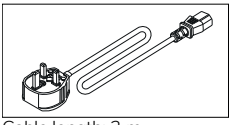
x1
Cable length: 3 m

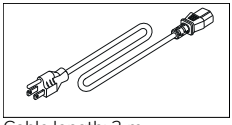
x1
Cable length: 3 m

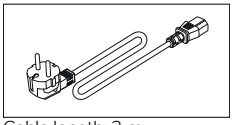
x1
Cable length: 3 m

ASIA

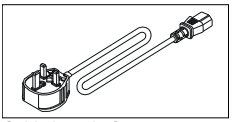
x1
Cable length: 3 m

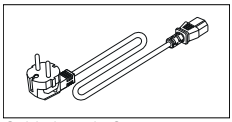
x1
Cable length: 3 m

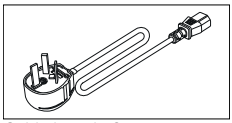
x1
Cable length: 3 m

SOUTH AFRICA

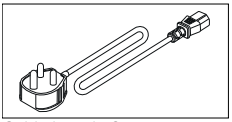
x1
Cable length: 3 m

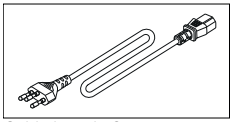
x1
Cable length: 3 m

SAUDI ARABIA

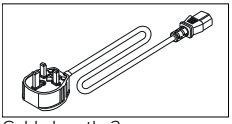
x1
Cable length: 3 m

OPS-M

This product is an optional accessory.

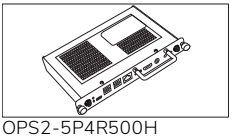
x1
OPS2-5P4R500H
OPS2-5P8R256S

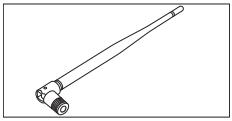
x2

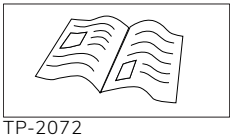
x1
TP-2072

ActivConnect OPS-G

This product is an optional accessory.

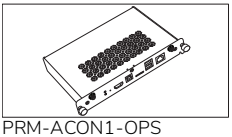
x1
PRM-ACON1-OPS

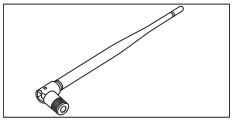
x2

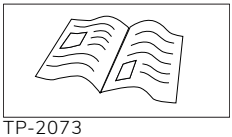
x1
TP-2073

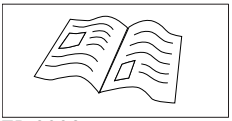
x1
TP-2093

ActivConnect G-Series

This product is an optional accessory.

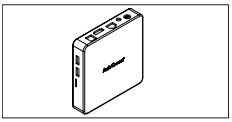

x1

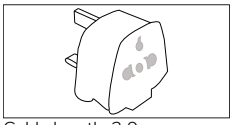

x5

Cable length: 2.9 m

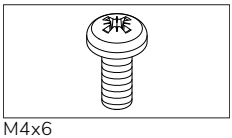

x4

M4x6

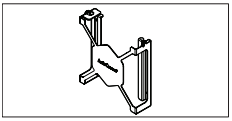

x1

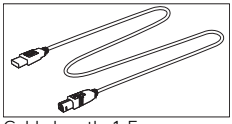

x1

Cable length: 1.5 m

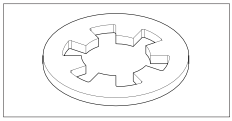

x4

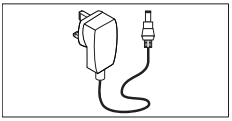

x1

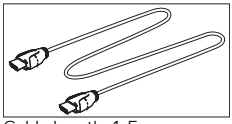

x1

Cable length: 1.5 m

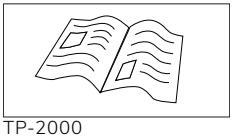

x1

TP-2000

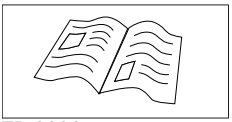

x1

TP-2006

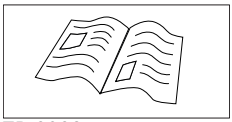

x1

TP-2023

Promethean Chromebox

This product is an optional accessory.

x1
PRM-CHROMEBOX-OS-COMP

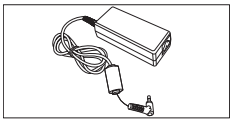
x1

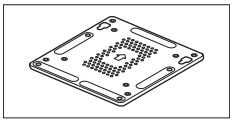
x1

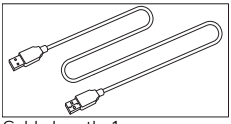
x1
Cable length: 1 m

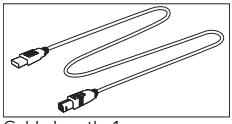
x1
Cable length: 1 m

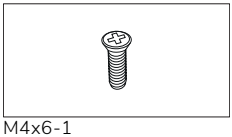
x4
M4x6-1

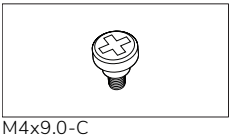
x2
M4x9.0-C

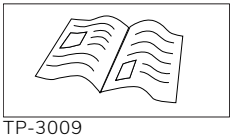
x1
TP-3009

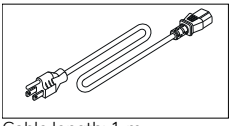
x1
Cable length: 1 m
US

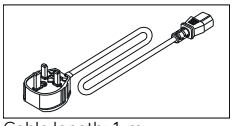
x1
Cable length: 1 m
UK

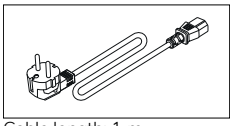
x1
Cable length: 1 m
EU

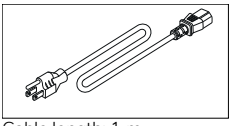
x1
Cable length: 1 m
AUS

Promethean Wi-Fi module (Nickel & Cobalt)

This product is an optional accessory.

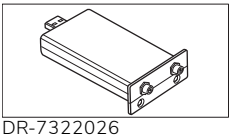
x1
DR-7322026

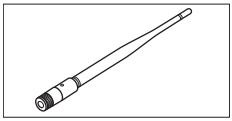
x2

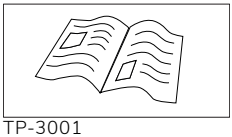
x1
TP-3001

Overview

Interfaces

AP7-U65

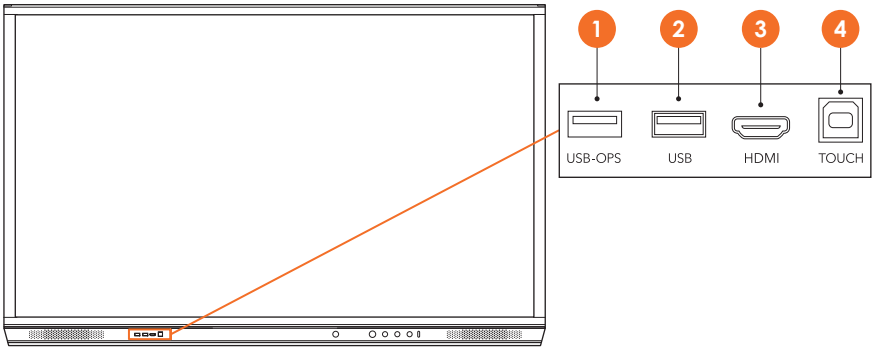

1	USB-OPS	2	USB
3	HDMI 1	4	TOUCH USB

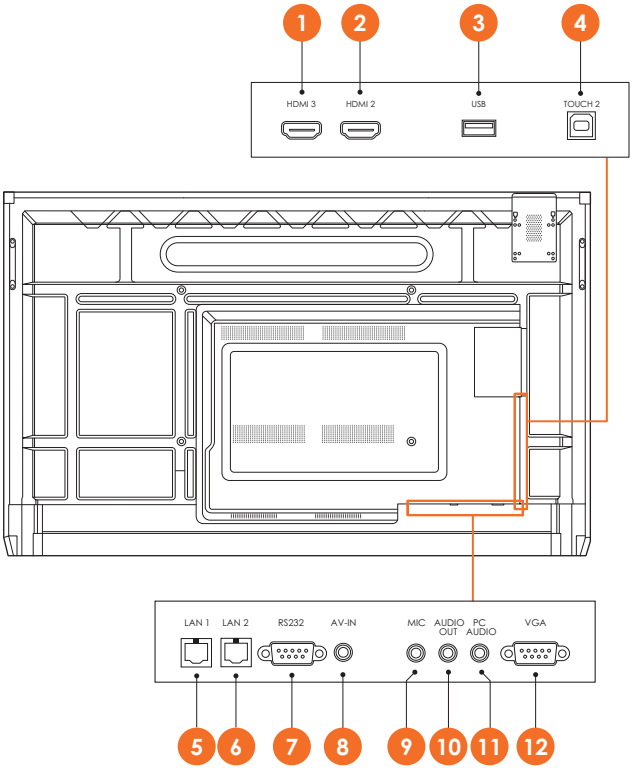

1	HDMI 3	2	HDMI 2
3	USB	4	TOUCH USB 2
5	LAN	6	LAN
7	RS232	8	AV IN
9	MICROPHONE	10	AUDIO OUT
11	PC AUDIO	12	VGA IN

AP7-U75

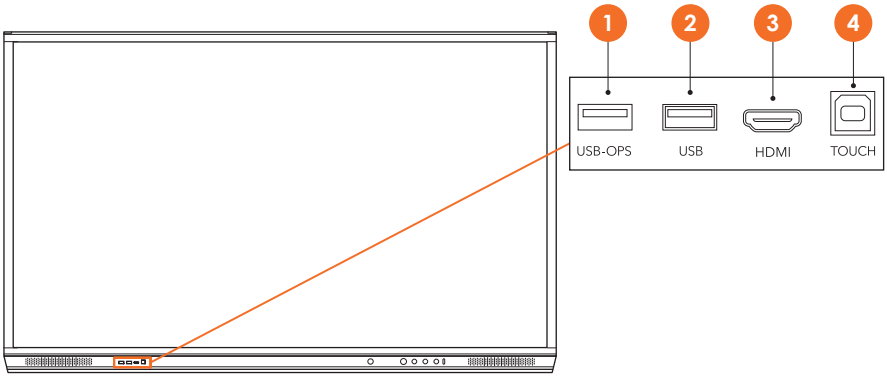

1	USB-OPS	2	USB
3	HDMI 1	4	TOUCH USB

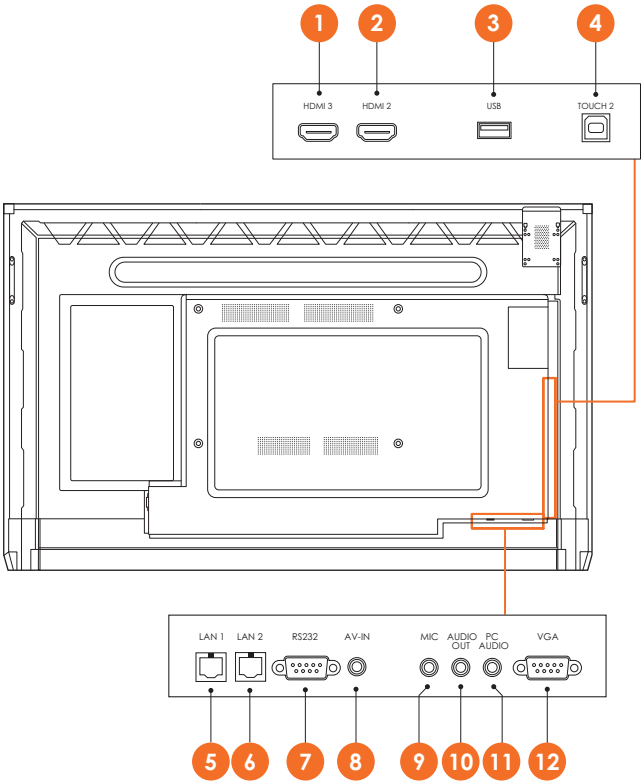

1	HDMI 3	2	HDMI 2
3	USB	4	TOUCH USB 2
5	LAN	6	LAN
7	RS232	8	AV IN
9	MICROPHONE	10	AUDIO OUT
11	PC AUDIO	12	VGA IN

AP7-U86

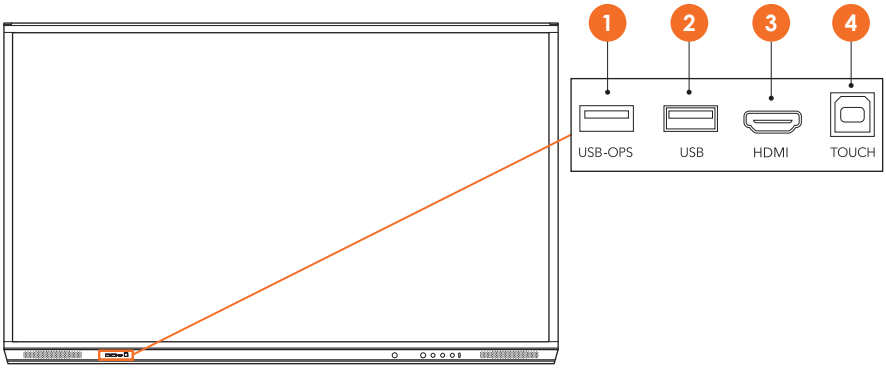

1	USB-OPS	2	USB
3	HDMI 1	4	TOUCH USB

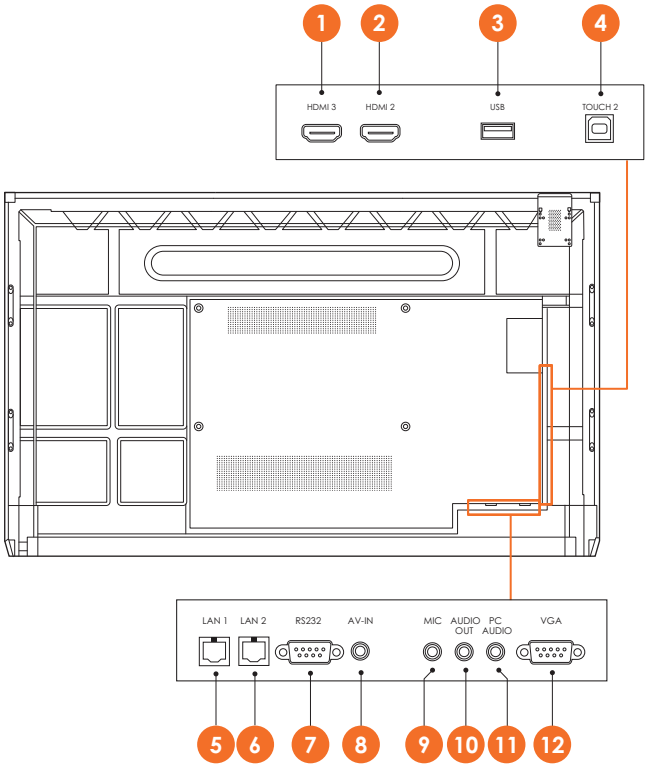

1	HDMI 3	2	HDMI 2
3	USB	4	TOUCH USB 2
5	LAN	6	LAN
7	RS232	8	AV IN
9	MICROPHONE	10	AUDIO OUT
11	PC AUDIO	12	VGA IN

ActivSoundBar

This product is an optional accessory.

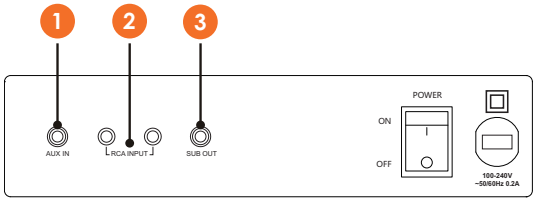

1	AUXILIARY	2	AUDIO IN
3	SUB-WOOFER OUT		

OPS-M

This product is an optional accessory.

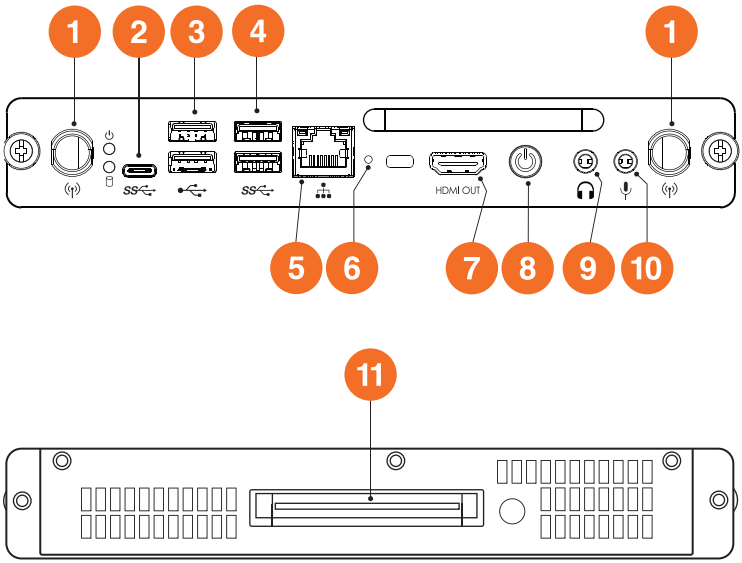

1	Wireless antenna	2	USB-C
3	USB 2.0	4	USB 3.0
5	LAN	6	Reset
7	HDMI out	8	Power
9	Audio out	10	Audio in
11	OPS connector		

ActivConnect OPS-G

This product is an optional accessory.

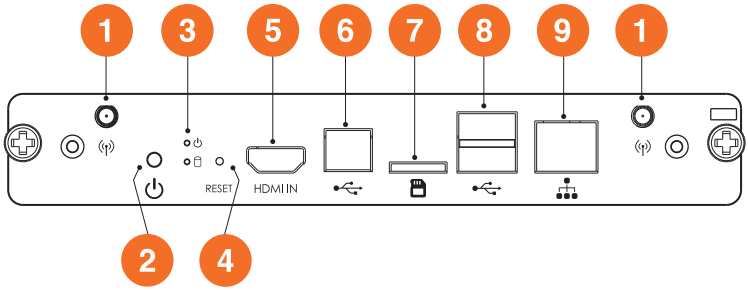

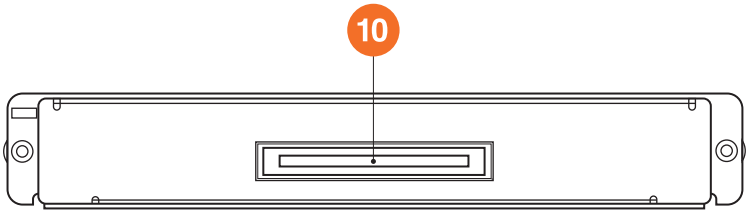

1	Wireless antenna	2	Power
3	Reset LED	4	Reset
5	HDMI in	6	USB-B
7	SD card	8	USB 2.0
9	LAN	10	OPS connector

ActivConnect G-Series

This product is an optional accessory.

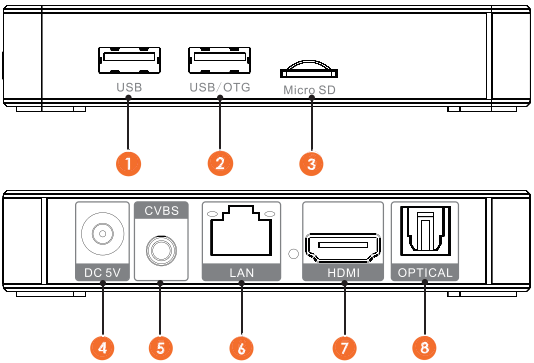

1	USB	2	USB/OTG
3	Micro SD	4	Power input
5	CVBS	6	RJ45 LAN
7	HDMI	8	Optical

Promethean Chromebox

This product is an optional accessory.

1	Audio output	2	USB 3.0 (supports battery charging)
3	MicroSD	4	Power
5	Kensington lock port	6	Reset

1	LAN	2	USB 2.0
3	USB 3.0	4	HDMI
5	Power socket	6	USB-C

Controls

ActivPanel

You can control the ActivPanel in the following ways:

- With the buttons on the control panel on the front of the device.
- With the buttons on the remote control.
- Using touch to manipulate menus and controls on screen.

You can access basic controls, as well as On-Screen Display (OSD) menus for adjusting audio and visual settings.

Control panel

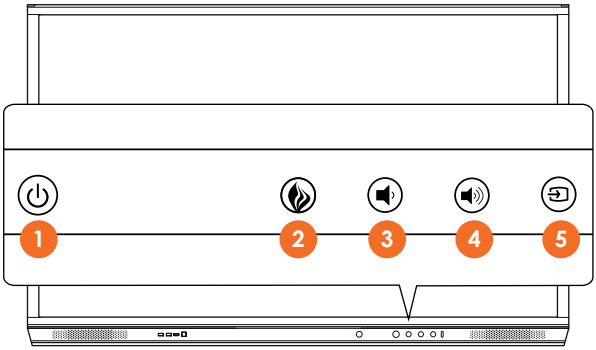

1	Power on/off	2	Menu
3	Decrease volume	4	Increase volume
5	Select source		

The Power on/off and the Menu button light up to indicate whether the panel is powered on, in standby or in sleep mode.

	Power on	Standby	Sleep
Power on/off button	○	●	●
Menu button	○	○	-

Remote control

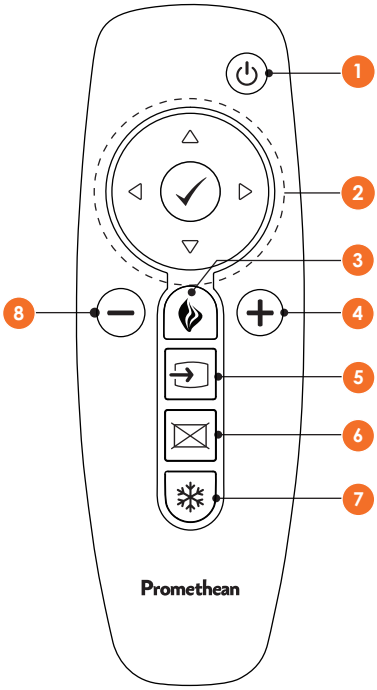

1	Power on/off	2	Confirm current selection/operation cursor keys: • up/down: select item to be adjusted • left/right: adjust value of selected item
3	Display OSD menus	4	Increase volume (+)
5	Open source menu	6	Blank screen function
7	Freeze screen	8	Decrease volume (-)

ActivSoundBar

This product is an optional accessory.

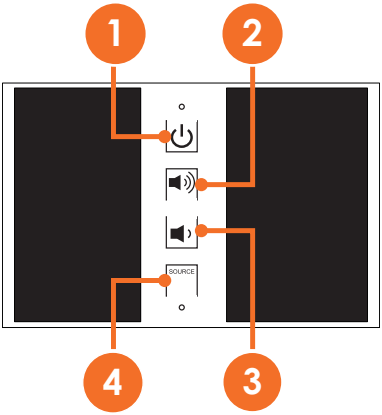

1	Power on/off	2	Increase volume
3	Decrease volume	4	Select audio source

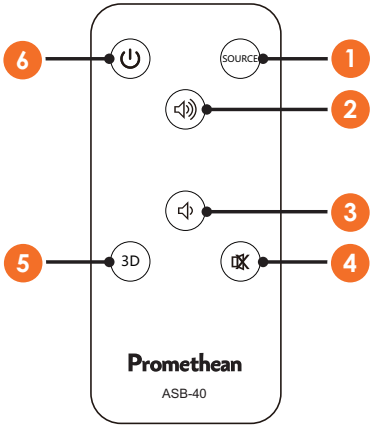

1	Select audio source	2	Increase volume
3	Decrease volume	4	Mute volume
5	3D sound function on/off	6	Power on/off

Installation

Installing accessories

Installing the ActivSoundBar

This product is an optional accessory.

1

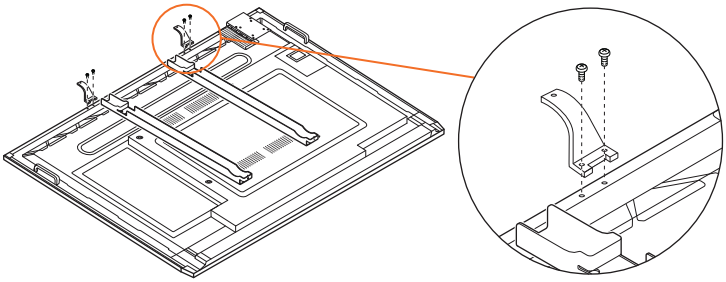

2

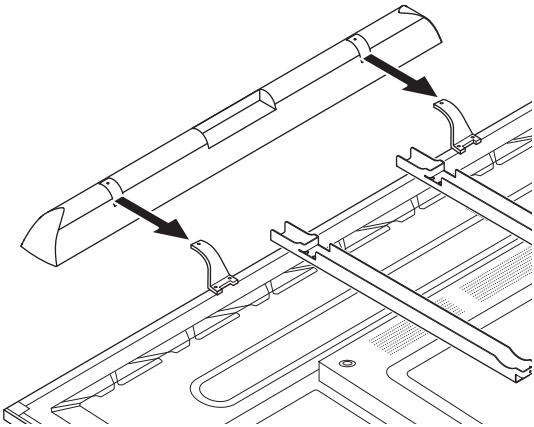

3

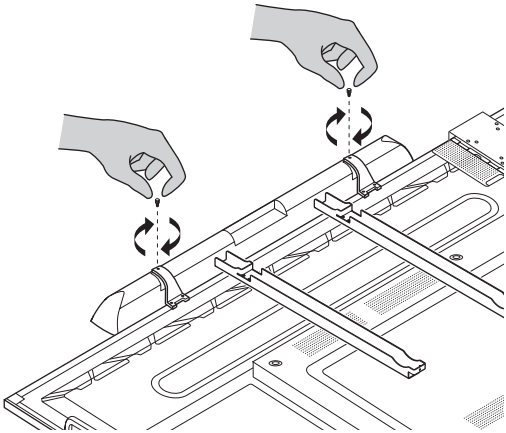

Installing the OPS-M

This product is an optional accessory.

Before installing or removing the product, disconnect the ActivPanel from the power supply.

1

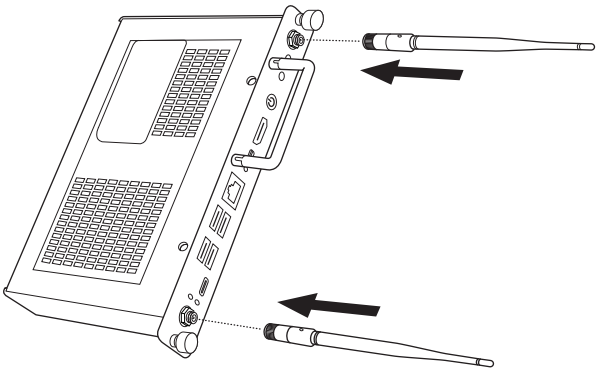

2

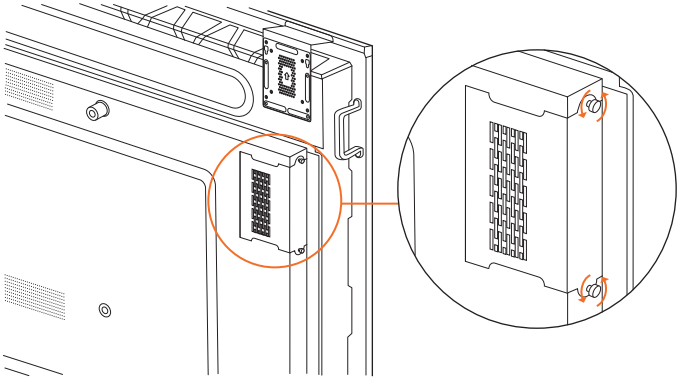

3

Note: When installing the OPS-M, ensure the venting holes are not covered when in position.

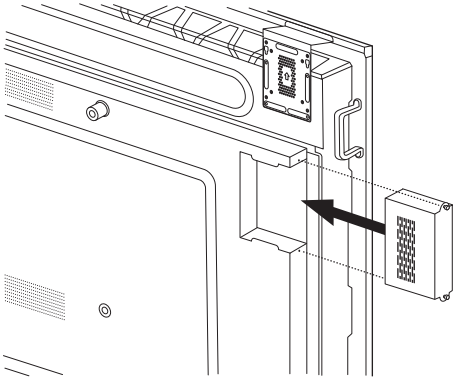

4

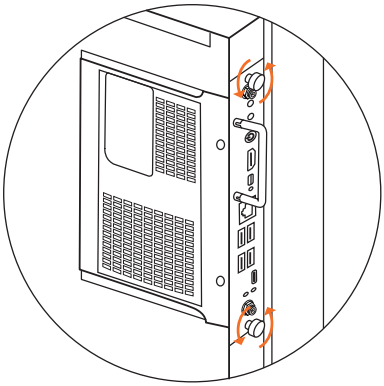

Installing the ActivConnect OPS-G

This product is an optional accessory.

Before installing or removing the product, disconnect the ActivPanel from the power supply.

1

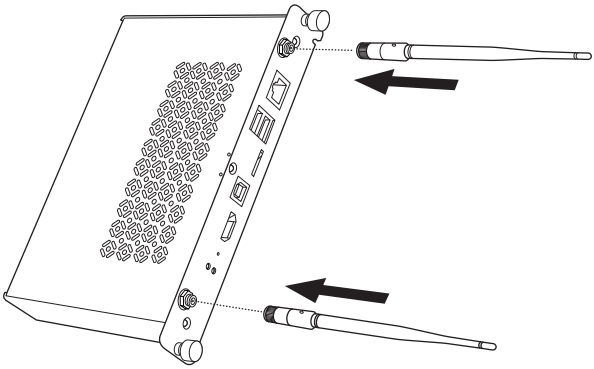

2

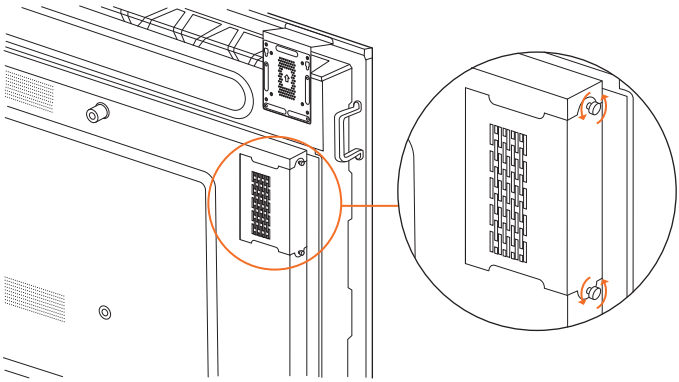

3

Note: When installing the ActivConnect OPS-G, ensure the venting holes are not covered when in position.

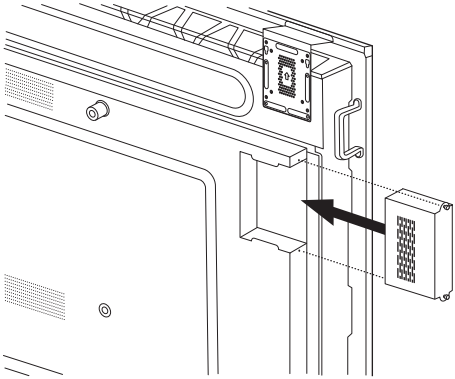

4

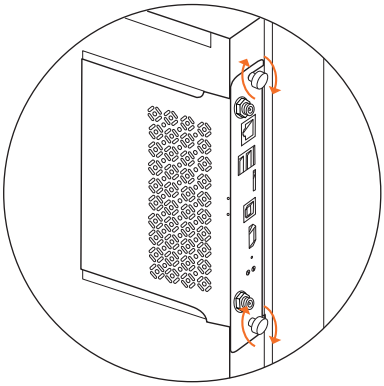

Installing the Mini-PC bracket

You can install an external computing device, for example an ActivConnect G-Series or a Promethean Chromebox, on the Mini-PC bracket.

1

i

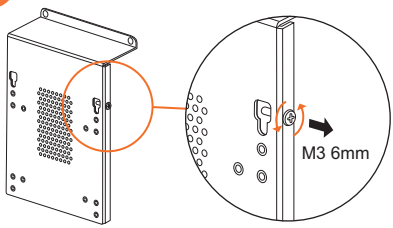

ii

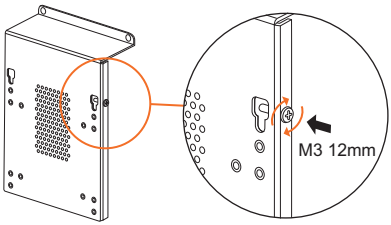

2

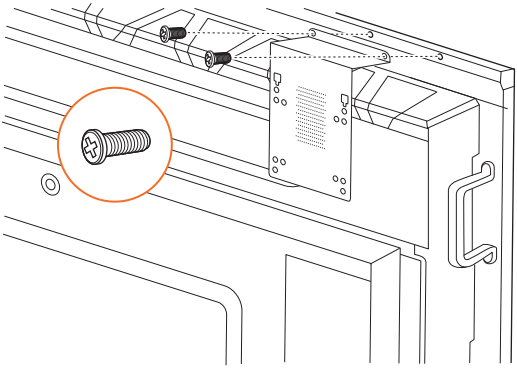

Installing the ActivConnect G-Series

This product is an optional accessory.

1

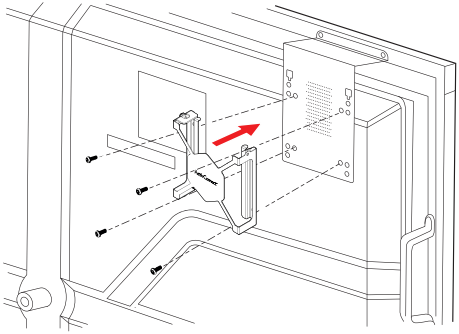

2

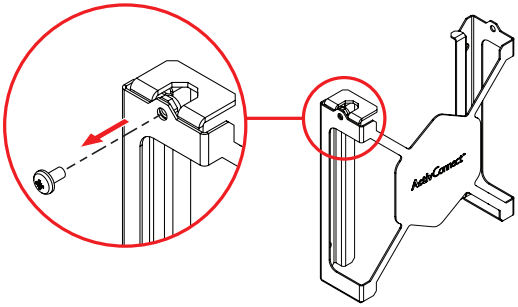

3

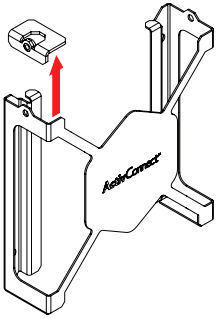

4

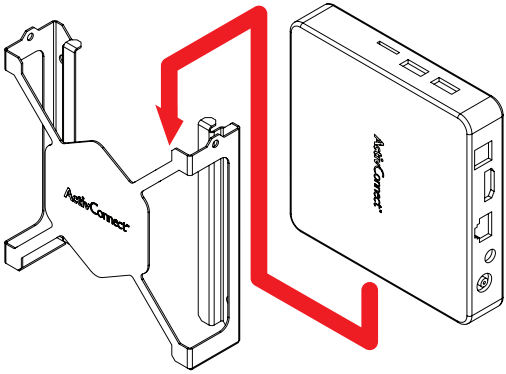

5

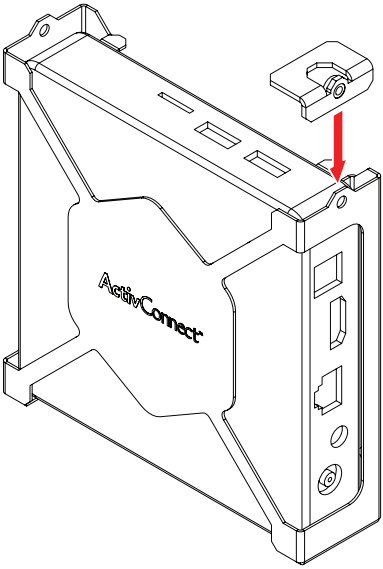

6

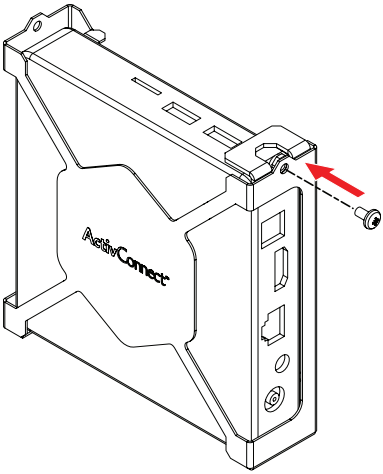

Installing the Promethean Chromebox

This product is an optional accessory.

1

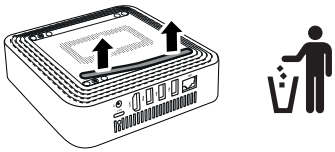

2

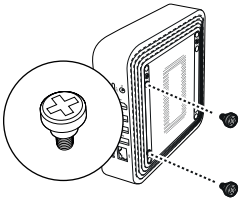

3

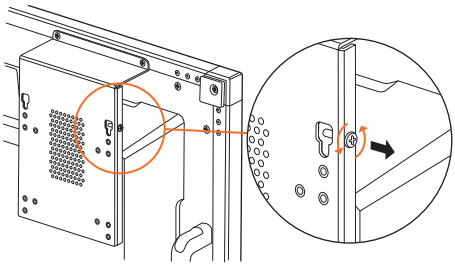

4

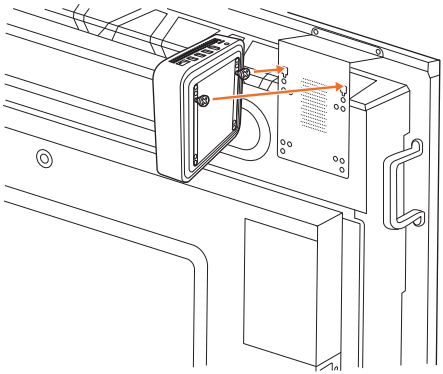

5

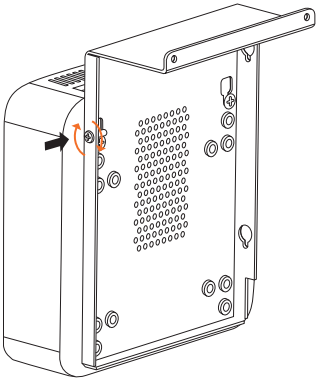

Installing the Promethean Wi-Fi module (Nickel & Cobalt)

This product is an optional accessory.

1

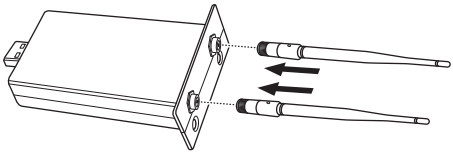

2

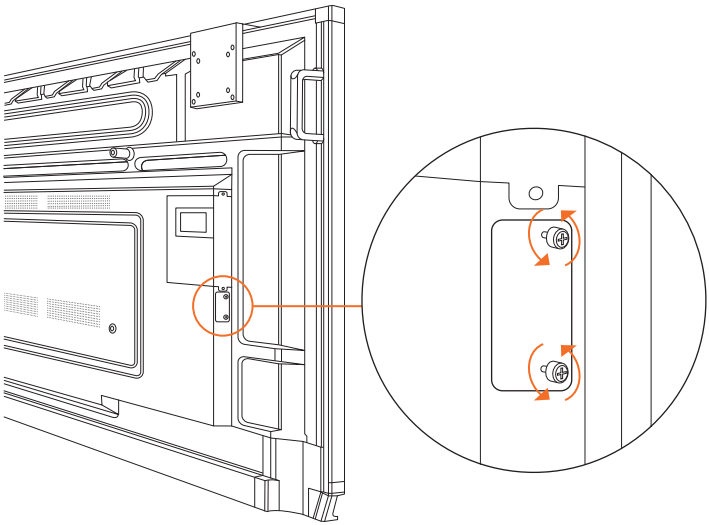

3

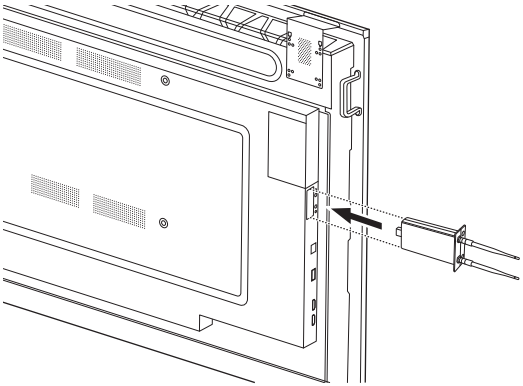

4

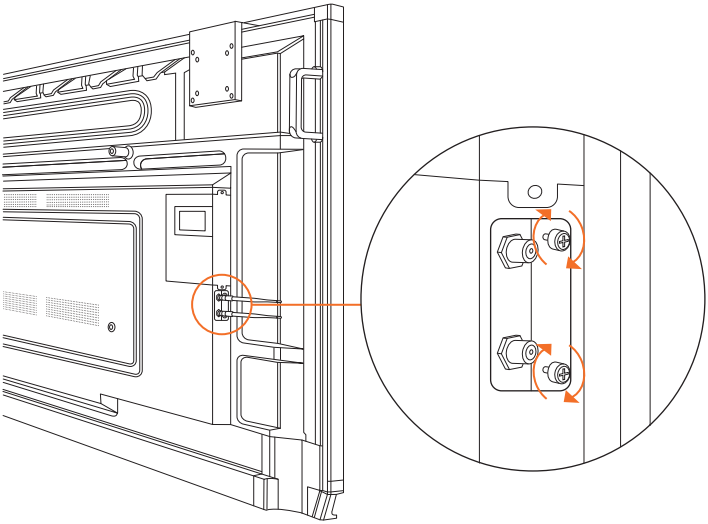

Mounting the ActivPanel on the wall mount

This product is an optional accessory.

For more information, see TP-3024.

1

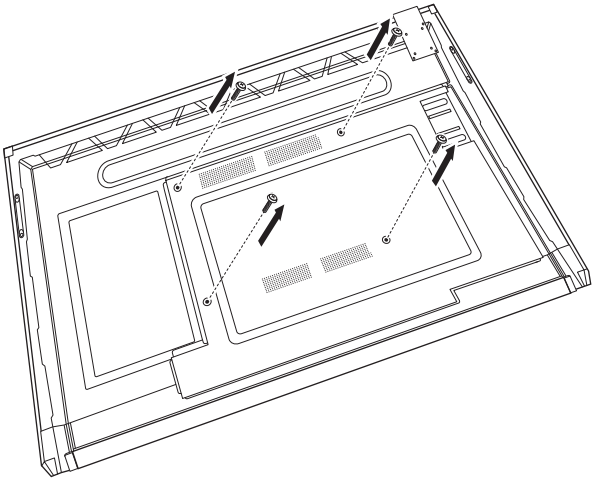

2

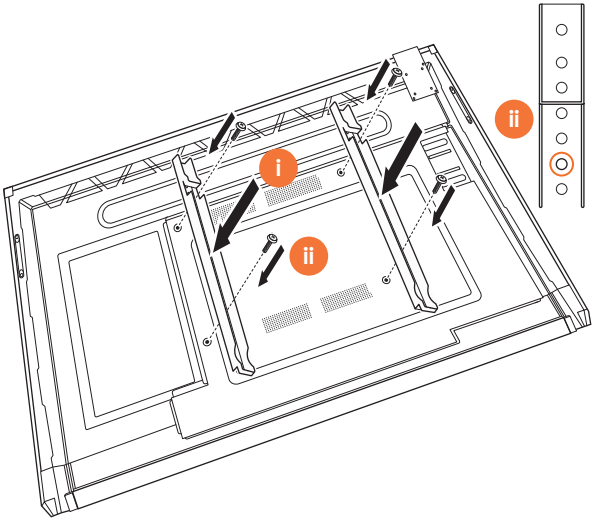

3

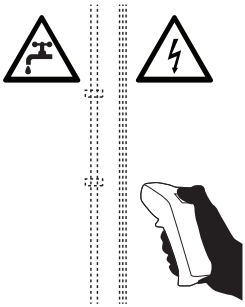

4

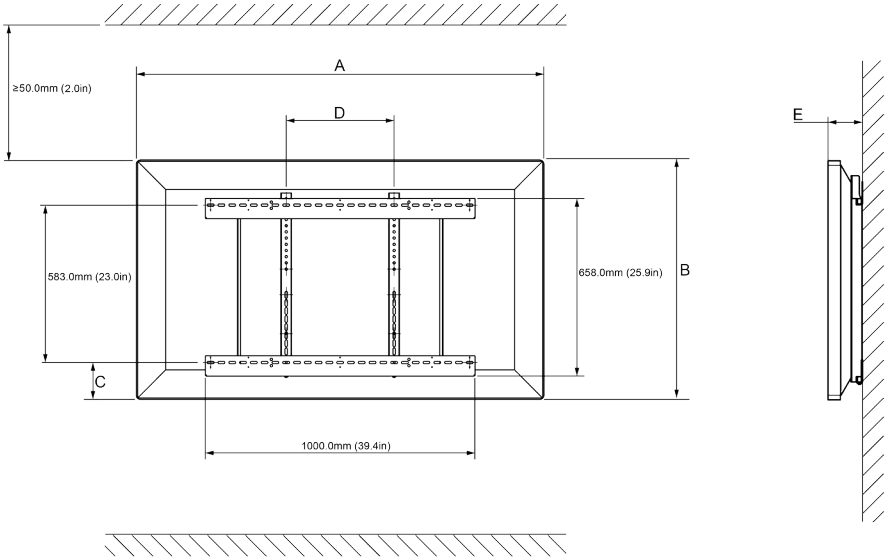

	65"	75"	86"
A	1536.0 mm (60.5")	1767.0 mm (69.6")	2018.0 mm (79.4")
B	960.0 mm (37.8")	1093.0 mm (43")	1236.0 mm (48.7")
C	151.0-289.0 mm (5.9-11.4")	228.0-365.0 mm (9.0-14.4")	292.0-430.0 mm (11.5-16.9")
D	600.0 mm (23.6")	600.0 mm (23.6")	700.0 mm (27.6")
E	134.0 mm (5.3")	146.0 mm (5.7")	155.0 mm (6.1")

5

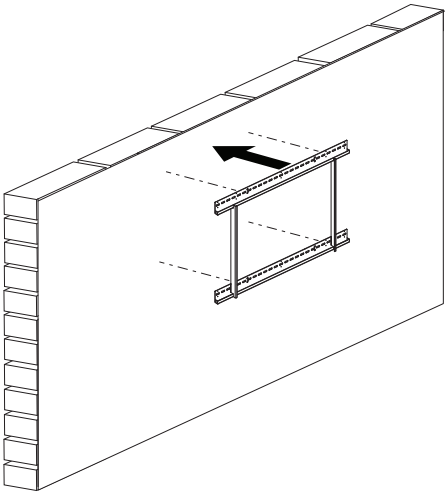

6

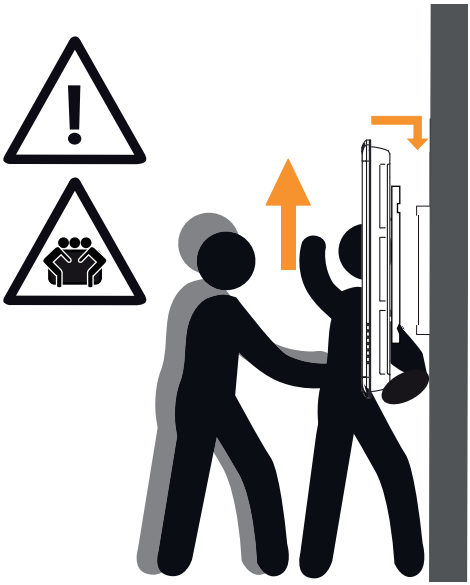

65"	46 kg	101.4 lbs
75"	64 kg	141.1 lbs
86"	84 kg	185.2 lbs

7

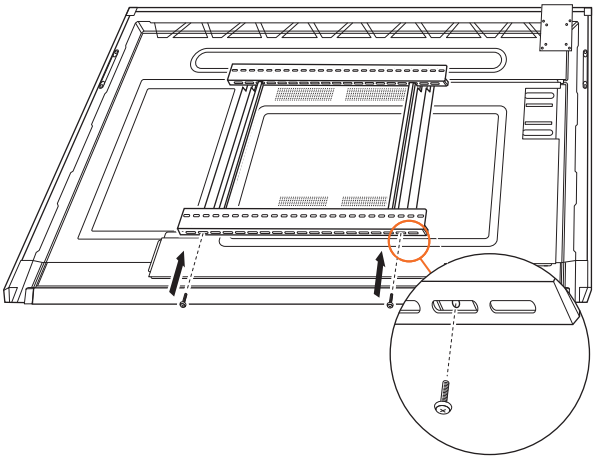

Mounting on the APTMS

For more information, see TP-1924.

1

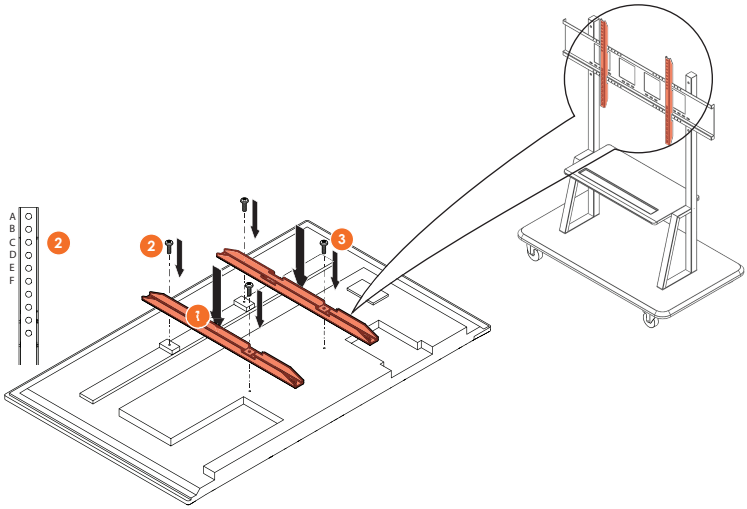

Model	Highest vertical blade position
AP7-U65	F
AP7-U75	C
AP7-U86	C

2

Mounting on the APTASBB400-70/90

For more information, see 902852-01.

1

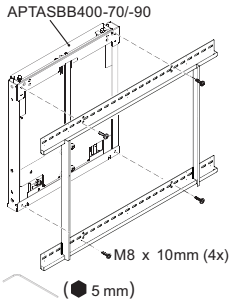

2

M4 x 12mm (10x) / M6 x 12mm (10x) / M8 x 12mm (10x)

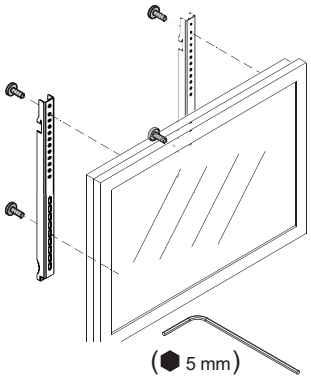

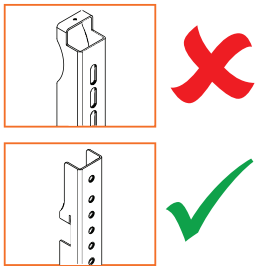

Model	Highest vertical blade position
AP7-U65	F
AP7-U75	C
AP7-U86	C

3

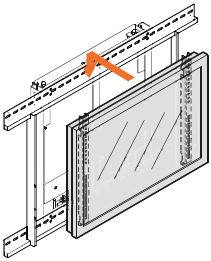

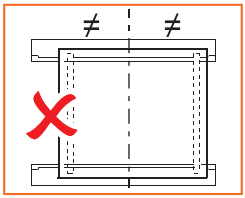

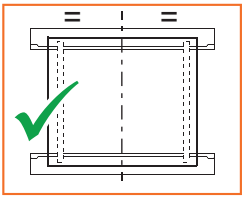

4

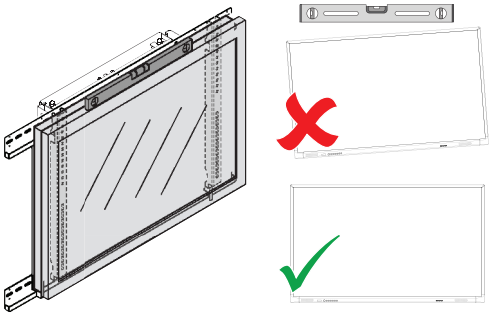

Setup

Installing batteries in the ActivPanel remote control

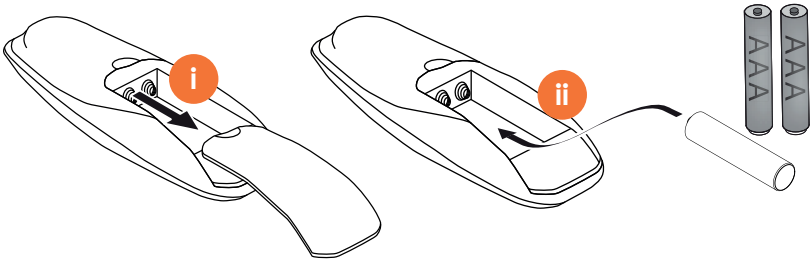

Switching on the ActivPanel

1

AP7-U65

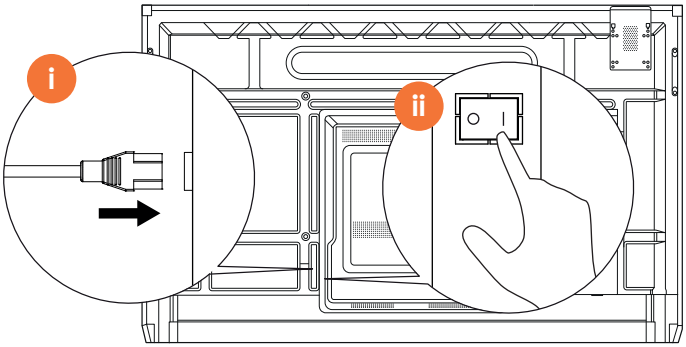

AP7-U75

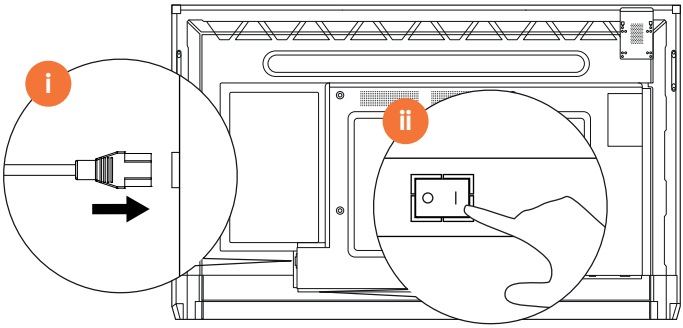

AP7-U86

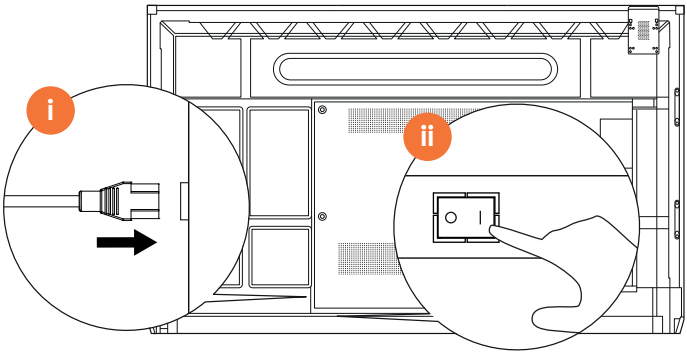

2

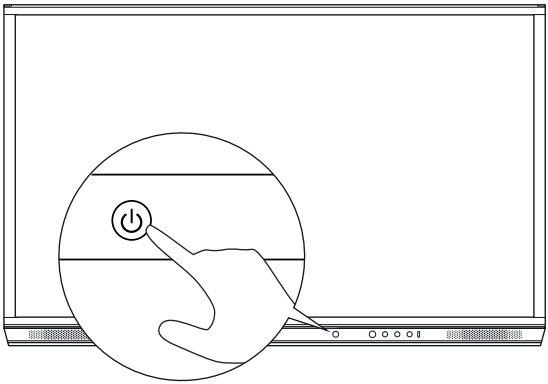

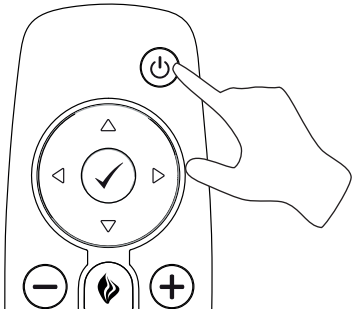

Setting up the ActivPanel for the first time

1

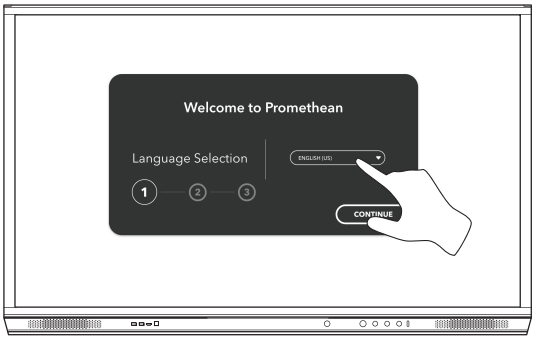

2

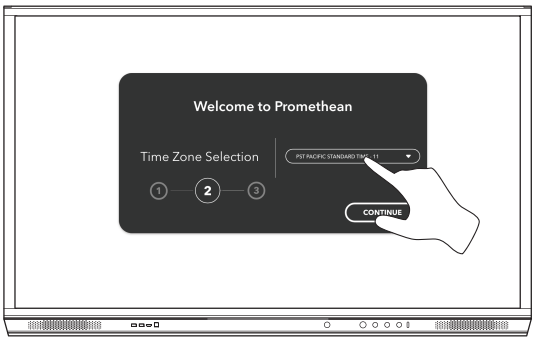

3

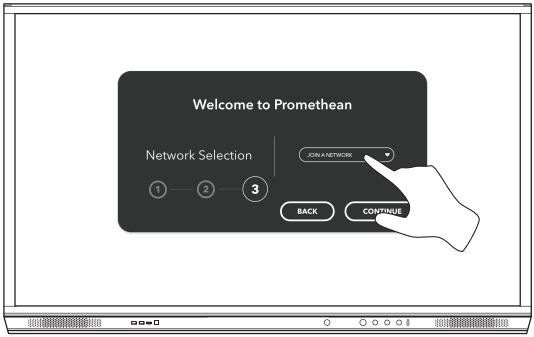

If you connect your ActivPanel to the Internet by an Ethernet cable, you will not be prompted to select a network.

4

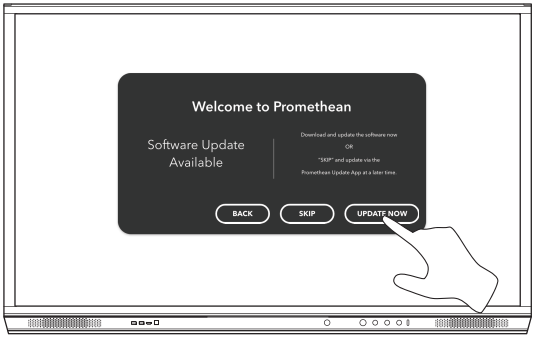

5

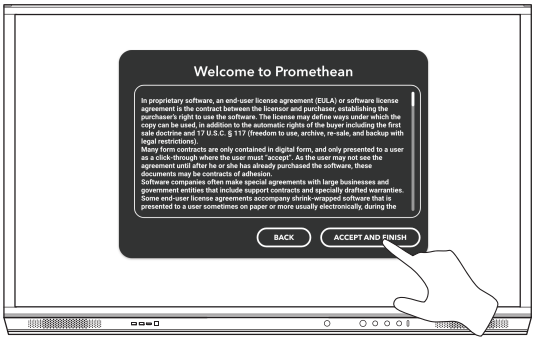

Activating the battery in the ActivSoundBar remote control

This product is an optional accessory.

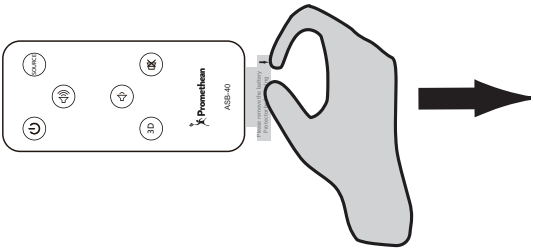

Connecting the ActivSoundBar

This product is an optional accessory.

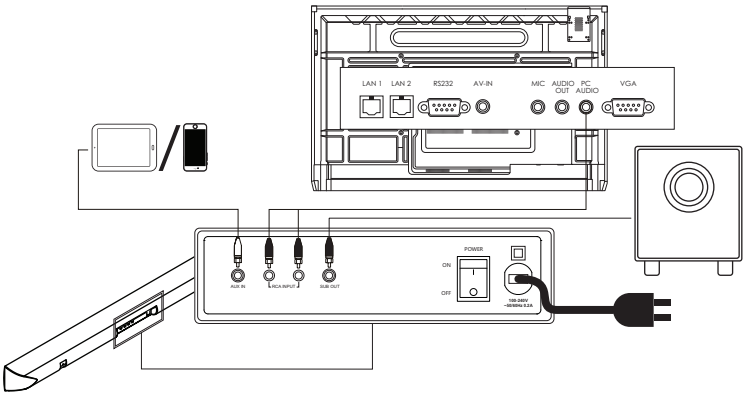

Switching on the ActivSoundBar

This product is an optional accessory.

1

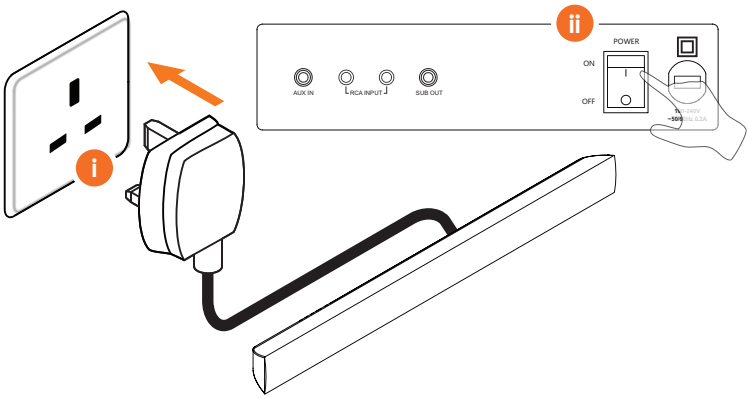

2

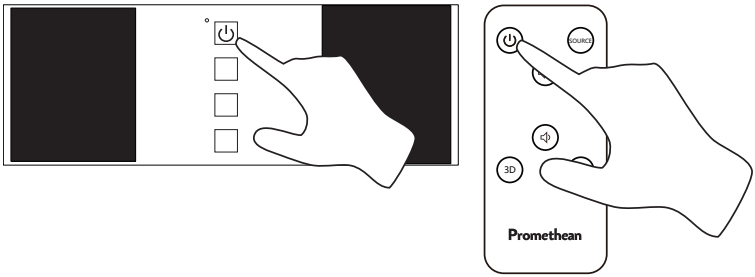

Connecting the ActivConnect G-Series

This product is an optional accessory.

1

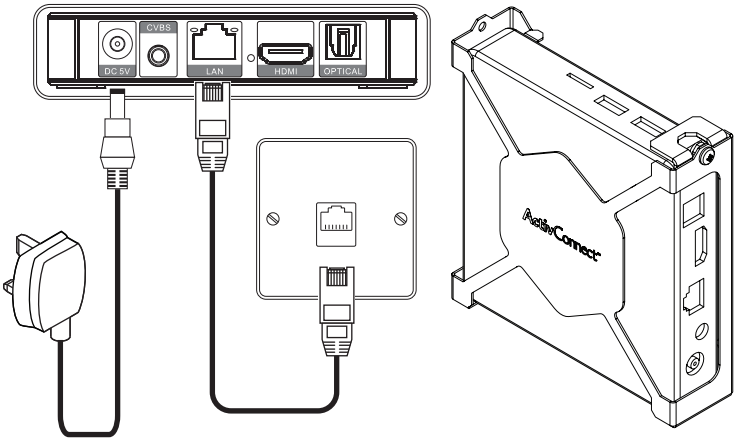

2

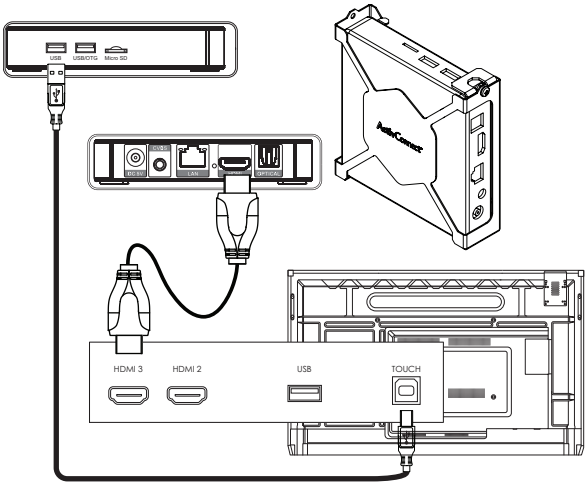

Switching on the OPS-M, ActivConnect OPS-G, and ActivConnect G-Series

1

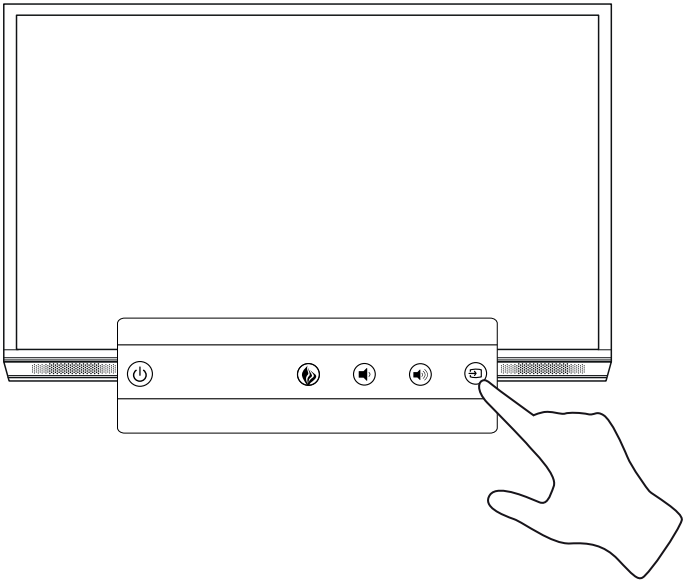

2

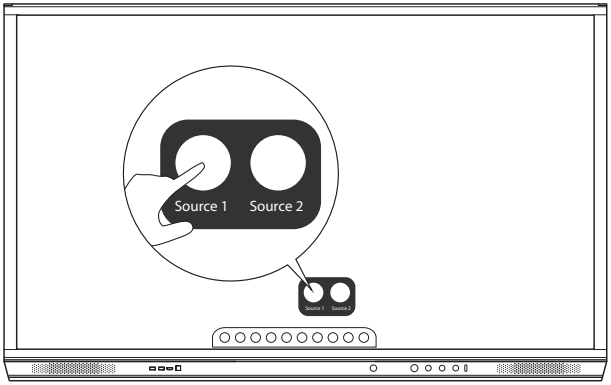

Connecting the Promethean Chromebox

This product is an optional accessory.

1

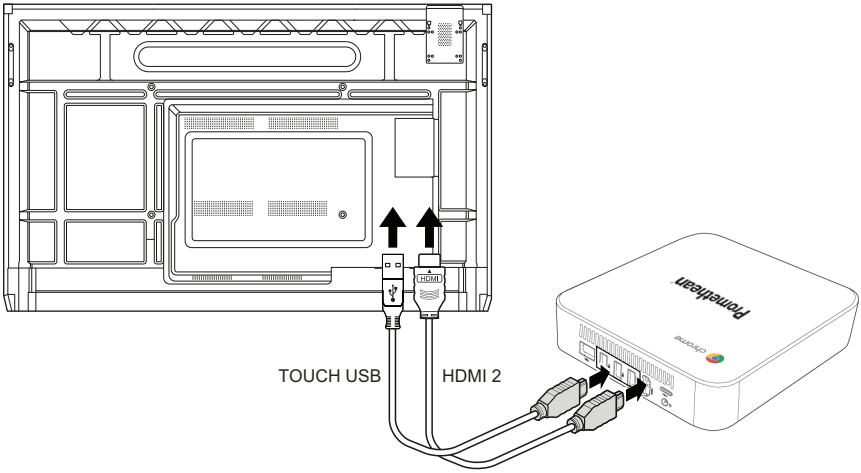

Switching on the Promethean Chromebox

This product is an optional accessory.

1

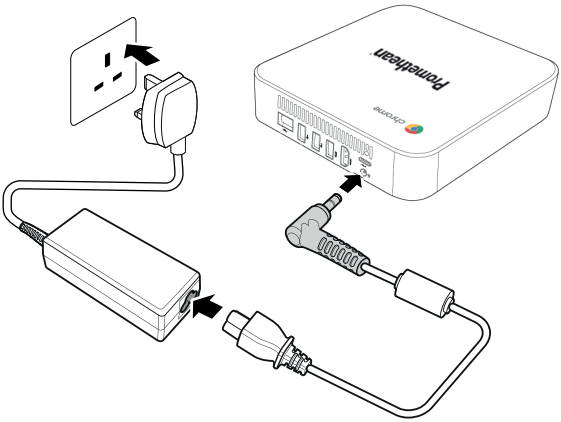

2

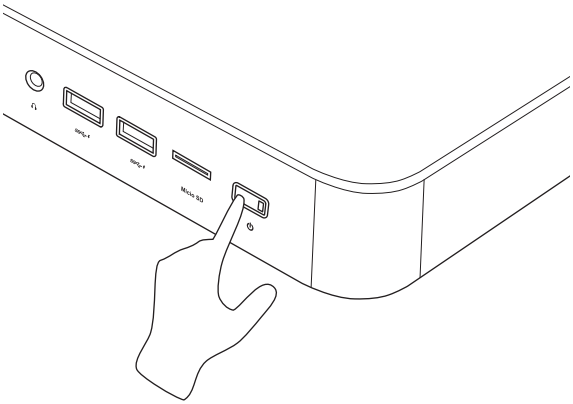

Connecting a laptop or desktop computer to the ActivPanel

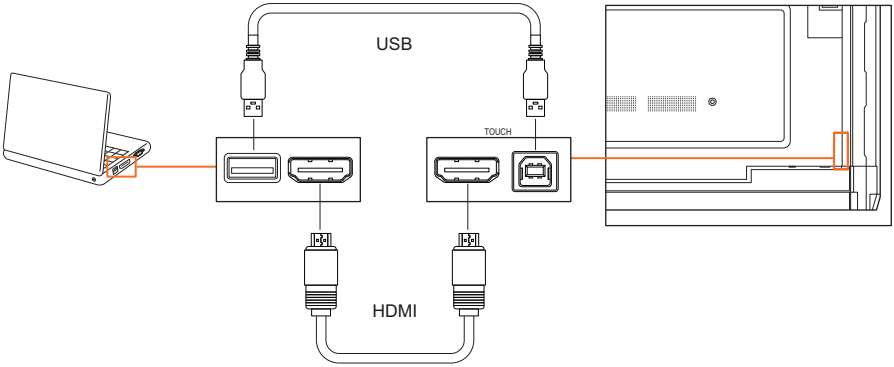

Selecting an HDMI source on the ActivPanel

1

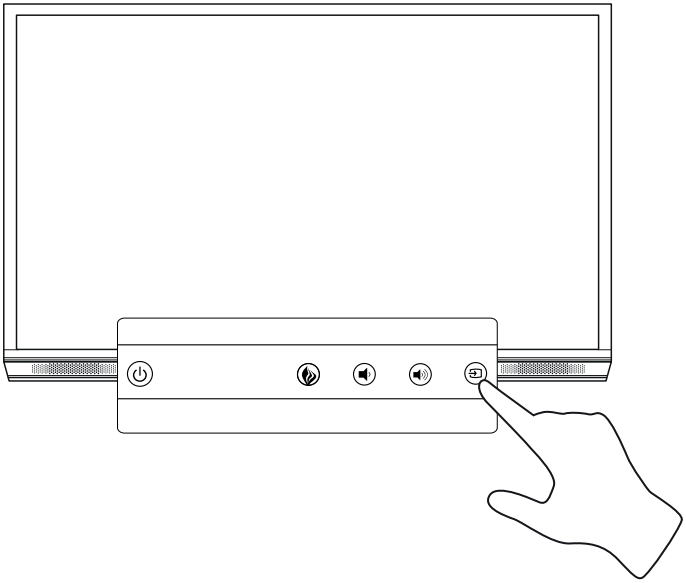

2

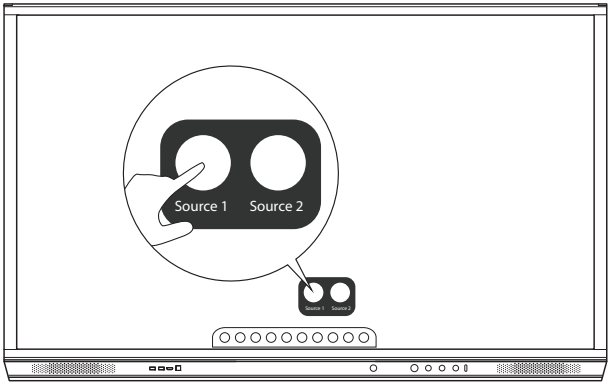

Connecting to the Internet on the ActivPanel

1

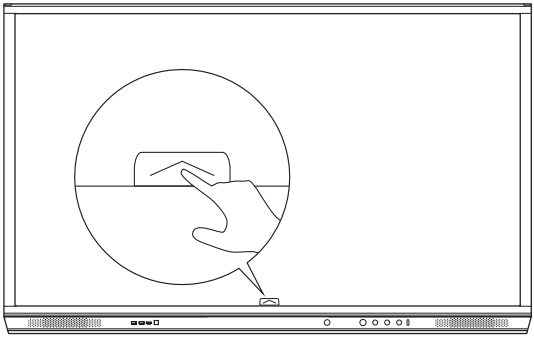

2

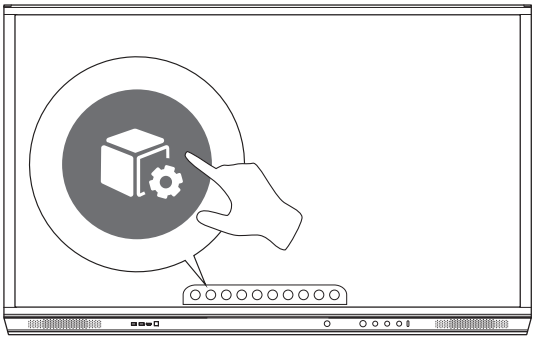

3

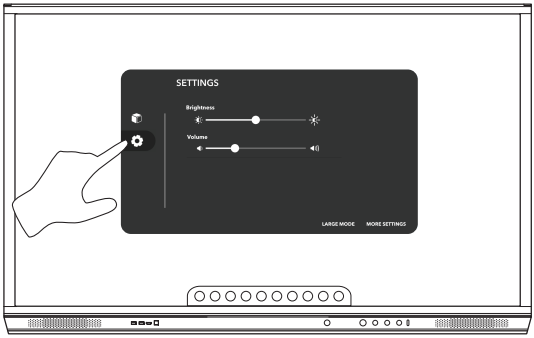

4

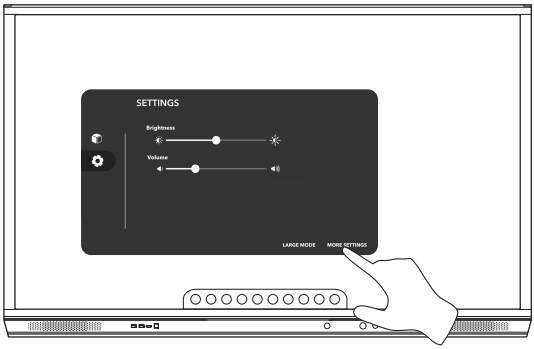

Connecting to a wireless network

1. Select **Wi-Fi**.
2. Turn **Wi-Fi** on.
3. Select the network you want to connect to.

Changing the network proxy settings

1. Select **Ethernet configuration** > **Proxy** > **Manual**.
2. Enter the relevant proxy details.
3. Select **Connect**.

Operation

Using touch on the ActivPanel

Moving objects

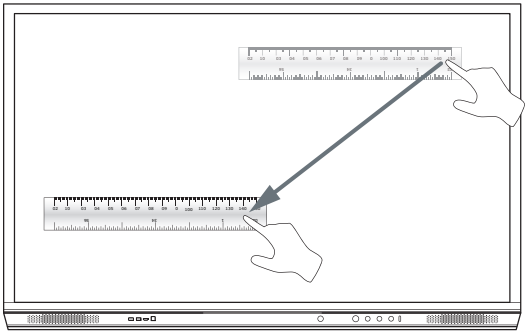

Rotating objects

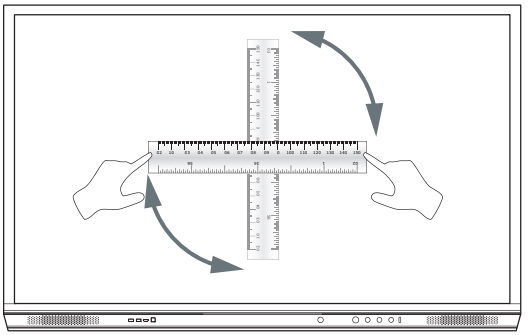

Enlarging objects

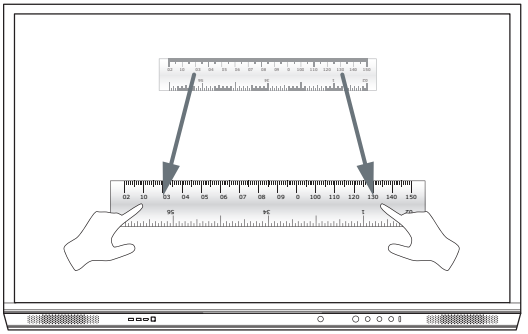

About the menu

Icon	Name	Description
	Back	Navigates to the previous screen.
	Locker	Includes the following sub menus: • Apps (provides access to all applications) • Settings (provides access to the ActivPanel settings such as brightness, volume, and language)
	Owner	Navigates to the Owner menu with QR codes to connect user profiles to the ActivPanel.
	Home	Navigates to the main menu.
	Whiteboard	Turns the screen into an interactive whiteboard.
	Capture	Captures a screenshot of the current screen.
	Annotate	Adds a drawing layer on top of the current screen.
	Source	Changes the input source.
	Screen Share	Launches the Screen Share software.
	Recent Apps	Navigates to the Apps menu.

Accessing the menu

To access the menu, you can do either of the following:

- Touch the Menu arrow at the bottom or side of the screen
- Press the Menu button on the front of the ActivPanel or the remote control

1

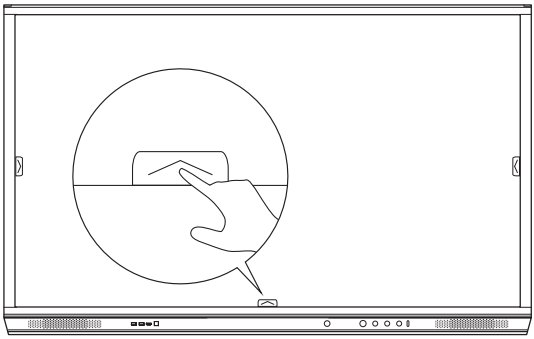

2

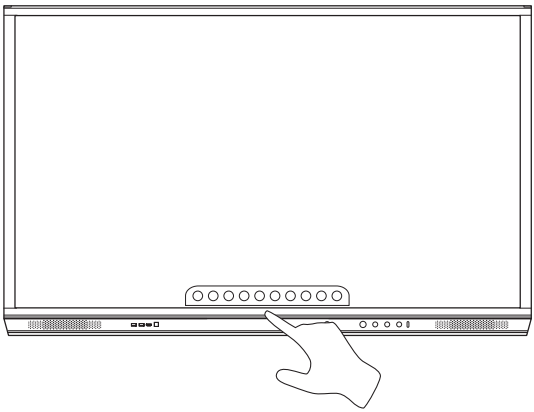

Opening apps

1

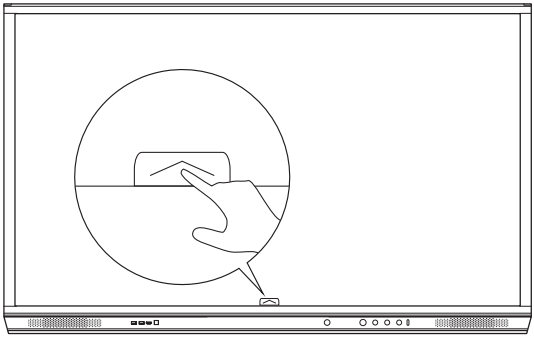

2

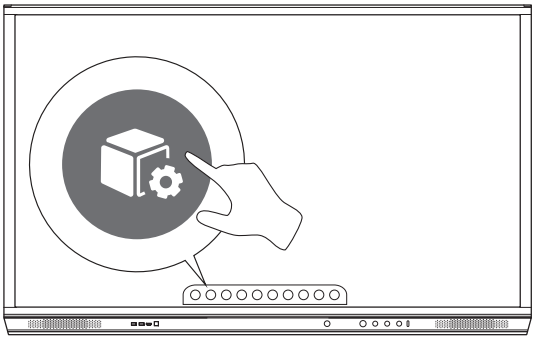

3

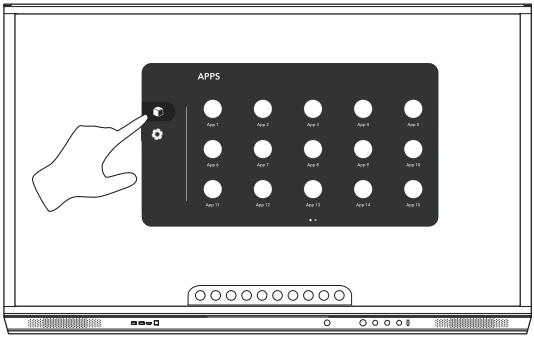

Changing settings

1

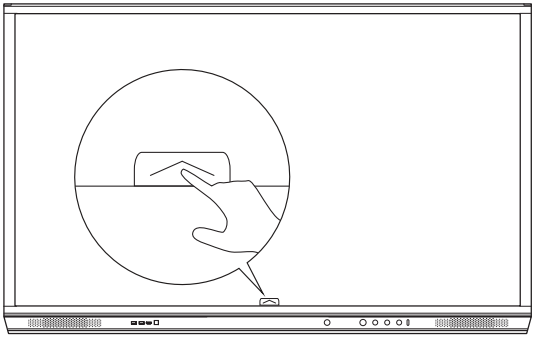

2

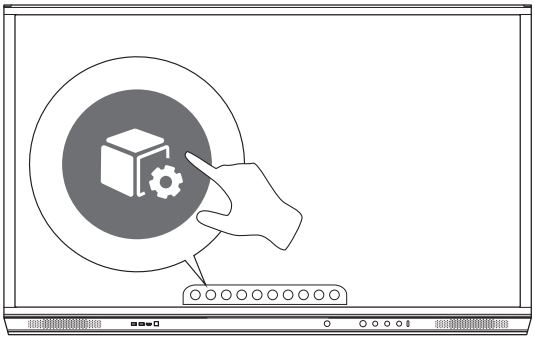

3

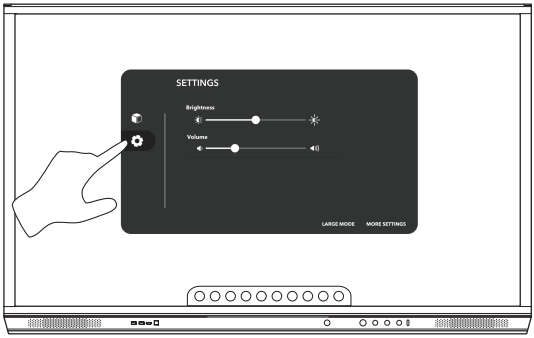

4

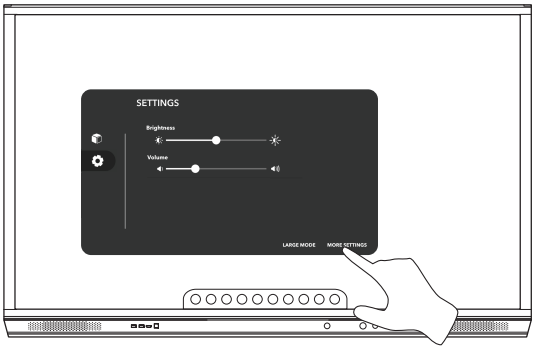

Updating the ActivPanel firmware

1

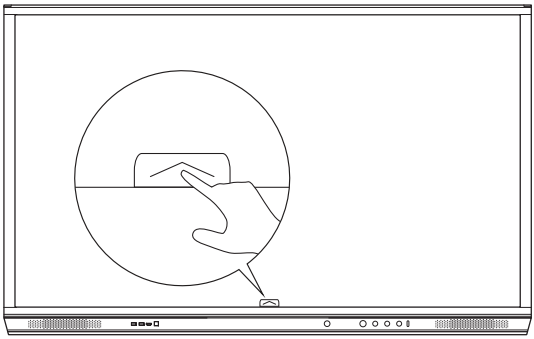

2

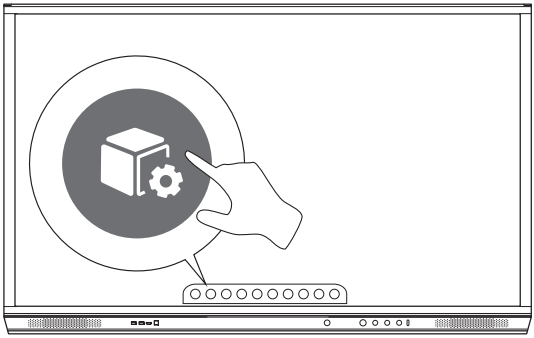

3

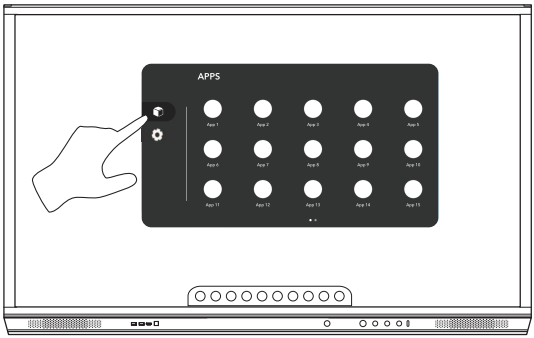

4

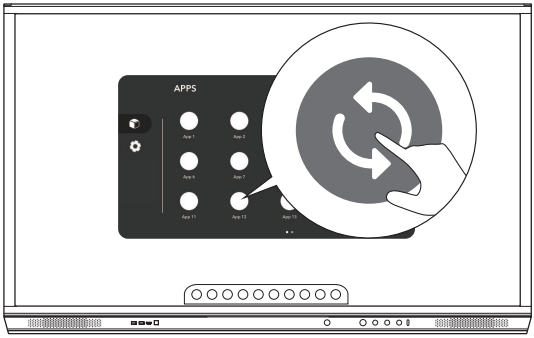

Warranty, registration and support

Warranty

- Promethean is confident in its product quality and to support this, offers an exceptional warranty for its parts and materials to be free of defects from date of installation (when registered). To view warranty information for your region, visit https://www.prometheanworld.com/activcare
- The installation of this product should be completed by a Promethean trained installer or other qualified installer. Promethean cannot warrant any fault occurring due to improper installation.
- This product is designed and manufactured to operate within defined design limits.
- Use of components not supplied by Promethean or not meeting minimum specifications may impact performance and affect the warranty.

Registration

- To ensure you maximize the standard warranty offered or if you have purchased an enhanced warranty and need to activate it, please register the product within 90 days of installation at: http://registration.prometheanworld.com

Support

- If your Promethean product suffers a fault, please visit our Support Portal for initial troubleshooting: https://support.prometheanworld.com
- If the troubleshooting does not correct the fault, please contact Promethean Technical Customer Support via our Support Portal: https://support.prometheanworld.com/contact

Troubleshooting

ActivPanel

If your ActivPanel is not operating correctly, please check the following table before contacting Technical Customer Support.

Problems	Solutions
No sound	• Try increasing the volume of the speaker. • Check that the ActivPanel is not turned off. • Check the ActivPanel volume level. • Make sure the correct input is selected. • Make sure the correct cables are properly connected.
Remote Control does not work	• Make sure the batteries are correctly inserted. • Take the batteries out and clean the terminals in the remote and the ends of the batteries. • If reinserting the battery has no effect, please replace the battery.
No power	• Make sure the AC power cable is securely connected to a power outlet. • Make sure the AC socket is properly connected. • Try another electrical device on the power outlet to ensure that there is an electrical current.

ActivSoundBar

This product is an optional accessory.

If your ActivSoundBar is not operating correctly, please check the following table before contacting Technical Support.

Problems	Solutions
No sound	• Try increasing the volume of the speaker. • Check that the ActivSoundBar is not turned off. • Check the ActivSoundBar volume level. • Make sure the correct input is selected. • Make sure the correct cables are properly connected.
Remote Control does not work	• Make sure the battery is correctly inserted. • Take the battery out, press the buttons once or twice, then reinsert the battery and try again. • If reinserting the battery has no effect, please replace the battery.
No power	• Make sure the AC power cable is securely connected to a power outlet. • Make sure the AC power cord is securely connected to the power connector. • Try another electrical device on the power outlet to ensure that there is an electrical current.
Speaker emits buzzing or humming sound	• Make sure both ends of the audio cable are properly connected. • Test the sound bar with another audio cable. • Test the sound bar with another audio device.

List of serviceable parts

Part name	Part number
AP5 3M Mains Cable EU	AP5-CB-MAINS-EU
AP5 3M Mains Cable US	AP5-CB-MAINS-US
AP5 3M Mains Cable AP	AP5-CB-MAINS-AP
AP5 3M Mains Cable CN (AP)	AP5-CB-MAINS-CN-1
AP5 3M Mains Cable CN (CN)	AP5-CB-MAINS-CN-2
AP5 3M Mains Cable ZA	AP5-CB-MAINS-ZA
AP7 Pen Nickel	AP7-PEN-U
AP Remote Control	AP-REMOTE-CONTROL

TP-3026-EN-V04 ©2020 Promethean Limited. All Rights Reserved. Products are subject to availability by country. Product specifications are subject to change without notice.