Panasonic®

Operating Instructions Basics

Installation Instructions provided

4K Integrated Camera

Model No. AW-UE4KG

Model No. AW-UE4KGN

Model No. AW-UE4WG

Model No. AW-UE4WGN

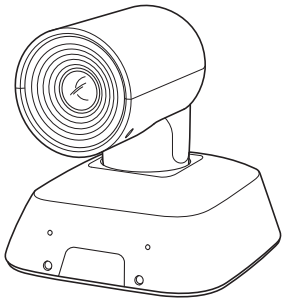

HDMI™

ENGLISH Basics	Before using this product, be sure to read “Read this first!” (pages 6, 24 to 27). This “Basics” describes the procedure for basic operation and installation. For more information, please visit the Panasonic website (https://pro-av.panasonic.net/manual/en/index.html), and refer to the Operating Instruction (Operations and Settings).
FRANÇAIS	Avant d’utiliser cet appareil, assurez-vous de lire la section « Lire ces informations en premier ! » (pages 6, 28 à 30). Pour de plus amples informations sur le mode d’emploi, visiter le site Web de Panasonic (https://pro-av.panasonic.net/manual/en/index.html) et consulter le mode d’emploi.
ESPAÑOL	Antes de usar este producto, asegúrese de leer “Lea esto primero” (páginas 7, 31 a 33). Si desea obtener más información acerca de las instrucciones de funcionamiento, visite el sitio web de Panasonic (https://pro-av.panasonic.net/manual/en/index.html) y consulte las instrucciones de funcionamiento.
DEUTSCH	Bitte lesen Sie sorgfältig die „Bitte lesen Sie zuerst diesen Hinweis!“ vor der Nutzung dieses Produkts. (Seiten 7, 34 bis 36). Weitere Informationen zu den Bedienungsanleitungen finden Sie auf der Panasonic-Webseite (https://pro-av.panasonic.net/manual/en/index.html) und in den Bedienungsanleitungen.
ITALIANO	Prima di utilizzare il prodotto, assicurarsi di leggere “Leggere prima quanto segue!” (pagine da 8, 37 a 39). Per maggiori informazioni sulle istruzioni per l’uso, per favore visitare il sito web Panasonic (https://pro-av.panasonic.net/manual/en/index.html), e fare riferimento alle istruzioni per l’uso.
РУССКИЙ	Перед использованием данного прибора ознакомьтесь с информацией в разделе «Прочитайте нижеследующее до начала эксплуатации!» (стр. 8, 40 до 42). Для получения дополнительной информации из инструкций по эксплуатации посетите веб-сайт Panasonic (https://pro-av.panasonic.net/manual/en/index.html) и обратитесь к инструкциям по эксплуатации.

AV0619MY6016 -AV-PS
Printed in Taiwan
Issued in January 2026

ENGLISH

DVQX1992TA

Български	Посетете следния уебсайт относно последната информация за безопасността и важни уведомления за продукта.
Hrvatski	Za najnovije sigurnosne informacije i važne obavijesti o proizvodu posjetite sljedeću internetsku stranicu.
Čeština	Na následujícím webu najdete nejaktuálnější bezpečnostní informace a důležité poznámky k tomuto produktu.
Dansk	Besøg følgende webside for den seneste sikkerhedsinformation og vigtige bemærkninger vedrørende produktet.
Nederlands	Ga naar de volgende website voor de recentste veiligheidsinformatie en belangrijke meldingen over het product.
Eesti	Toodet puudutava värskeima ohutusteabe ja oluliste märkuste saamiseks külastage järgmist veebilehte.
Suomi	Käy seuraavalla verkkosivulla saadaksesi uusimmat turvallisuustiedot ja tärkeät tiedot liittyen laitteeseen.
Ελληνικά	Για τις πιο πρόσφατα επικαιροποιημένες πληροφορίες σχετικά με θέματα ασφάλειας και σημαντικές ειδοποιήσεις που αφορούν το προϊόν σας, επισκεφτείτε τον ιστότοπο που ακολουθεί.
Magyar	A termékkel kapcsolatos legfrissebb biztonsági információkért és fontos értesítésekért látogasson el az alábbi weboldalra.
Latviešu	Lai iegūtu jaunāko informāciju par drošību un skatītu svarīgus paziņojumus par šo produktu, apmeklējiet tālāk norādīto tīmekļa vietni.
Lietuvių	Jei reikia naujausios saugos informacijos ir svarbių pranešimų apie gaminį, apsilankykite toliau nurodytoje svetainėje.
Polski	Najnowsze informacje o bezpieczeństwie i ważne informacje o produkcie znajdują się w poniższej witrynie internetowej.
Português	Consulte o seguinte website para as mais recentes informações de segurança e importantes notificações sobre o produto.
Română	Vizitați următoarea pagină web pentru ultimele informaţii de securitate și notificări importante cu privire la produs.
Slovensky	Pre najnovšie bezpečnostné informácie a dôležité oznámenia súvisiace s produktom navštívte túto webovú stránku.
Slovenščina	Za najnovejše varnostne informacije in pomembna obvestila v zvezi z izdelkom obiščite naslednje spletno mesto.
Svenska	Besök följande webbplats för senaste säkerhetsinformation och viktiga meddelanden om produkten.
العربية	زر موقع الويب التالي لمعرفة أحدث معلومات السلامة والإخطارات الهامة بشأن المنتج.

https://pro-av.panasonic.net/manual/en/index.html

Trademarks and Registered Trademarks

- Microsoft®, Windows®, Windows® 7, Windows® 10, Microsoft Edge, Internet Explorer® are either registered trademarks or trademarks of Microsoft Corporation in the United States and other countries.
- Apple, Mac, macOS, OS X and Safari are registered trademarks of Apple Inc., in the United States and other countries.
- Google Chrome™ browser is trademarks of Google LLC.
- Intel® and Intel® Core™ are trademarks or registered trademarks of Intel Corporation in the United States and other countries.
- Adobe® and Reader® are either registered trademarks or trademarks of Adobe Systems Incorporated in the United States and/or other countries.
- The terms HDMI and HDMI High-Definition Multimedia Interface, and the HDMI Logo are trademarks or registered trademarks of HDMI Licensing Administrator, Inc. in the United States and other countries.
- Other names of companies and products contained in these Operating Instructions may be trademarks or registered trademarks of their respective owners.

About Copyright and License

Distributing, copying, disassembling, reverse compiling, reverse engineering, and also exporting in violation of export laws of the software provided with this unit are expressly prohibited.

Abbreviations

For the purposes of this manual, the model numbers of the units are given as listed in the table below.

Model number of unit	Model number given in manual
AW-UE4KG, AW-UE4WG AW-UE4KGN, AW-UE4WGN	AW-UE4
AW-RP60G	AW-RP60

Illustrations and screen displays featured in the manual

What is shown in the manual's illustrations and screen displays may differ from how it is actually appears.

Contents

Read this first!.....6
Lire ces informations en premier!.....6
Lea esto primero!.....7
Bitte lesen Sie zuerst diesen Hinweis!.....7
Leggere prima quanto segue!.....8
Прочитайте нижеследующее до начала эксплуатации!.....8
Installation Precautions.....9
How to Connect and Install the Unit.....13
Checking the Installation Location.....13
Preparing the Power Source.....14
Ceiling Mount Installation.....14
When using the WV-Q105A (optional accessory).....17
Stand-alone installation.....18
Connecting Cables.....19
Connecting with HDMI Monitor.....20
System example 1 (IP control, PoE).....21
System example 2 (IP image transmission, PoE).....22
System example 3 (USB connection).....23
Read this First!.....24
Lire ces informations en premier!.....28
Lea esto primero!.....31
Bitte lesen Sie zuerst diesen Hinweis!.....34
Leggere prima quanto segue!.....37
Прочитайте нижеследующее до начала эксплуатации!.....40
Characteristics.....43
Required Personal Computer Environment.....45
Accessories.....48
Optional accessories.....48

Operating Precautions 49
Parts and Functions 52
Camera Unit 52
Tilting the Camera Up and Down 53
Panning the Camera Right and Left 54
Wireless Remote Control 55
Wireless Remote Control (optional accessory) 57
Network Settings 59
Use the Easy IP Setup Software to Establish the Unit's Settings 59
Setting the Initial Account 61
Starting the Web Setting Screen 62
Starting the Web Setting Screen (Live Screen/Setup Screen) 62
Power on and Power Off the Camera Unit 65
Power on the Camera Unit 65
Power off the Camera Unit 66
Troubleshooting 67
Specifications 70
Index 71

Read this first!

ENGLISH

WARNING:

To prevent injury, this apparatus must be securely attached to the floor/wall in accordance with the installation instructions.

WARNING:

Installation should only be performed by qualified installation personnel.
Improper installation may result in the entire apparatus falling down and causing injury.

CAUTION:

When mounting this unit on a ceiling etc., be sure to use the supplied Wall Mount for correct installation. Attaching with other mounts or methods may cause a serious accident such as a fall.

[ ] indicates safety information.

Lire ces informations en premier!

FRANÇAIS

AVERTISSEMENT:

Pour éviter tout risque de blessures, l'appareil doit être solidement fixé au plancher/mur conformément aux instructions d'installation.

AVERTISSEMENT:

L'installation ne doit être effectuée que par du personnel d'installation qualifié.
Une mauvaise installation peut avoir pour conséquence la chute de l'appareil et provoquer des blessures.

ATTENTION:

Lors du montage de cet appareil sur un plafond, etc., assurez-vous d'utiliser la fixation murale fournie pour garantir une installation correcte. Le montage à l'aide d'autres fixations ou d'autres méthodes pourrait provoquer un accident grave tel qu'une chute

[ ] Informations concernant la sécurité.

Lea esto primero!

ESPAÑOL

ADVERTENCIA:

Para evitar heridas, este aparato debe estar firmemente instalado al piso/pared de acuerdo con las instrucciones de instalación.

ADVERTENCIA:

La instalación solamente debe llevarla a cabo personal cualificado.
Una instalación incorrecta podría provocar la caída del dispositivo y causar lesiones.

PRECAUCIÓN:

Al montar esta unidad en el techo, etc., asegúrese de utilizar el soporte de pared suministrado para su correcta instalación. El uso de otros soportes o métodos podría provocar un grave accidente como, por ejemplo, a consecuencia de una caída

[ ] indica información de seguridad.

Bitte lesen Sie zuerst diesen Hinweis!

DEUTSCH

WARNUNG:

Um Verletzungen zu verhüten, muss dieser Apparat gemäß der Installationsanleitung sicher am Boden bzw. an der Wand befestigt werden.

WARNUNG:

Die Installation darf nur durch qualifiziertes Personal ausgeführt werden.
Fehlerhafte Installation kann zum Herunterfallen des Gerätes und zu Verletzungen führen.

VORSICHT:

Wenn Sie dieses Gerät an einer Decke etc. montieren, achten Sie darauf, für eine ordnungsgemäße Installation die mitgelieferte Wandhalterung zu verwenden. Das Anbringen mit andern Halterungen oder Methoden könnte zu einem schweren Unfall wie einem Herunterfallen führen.

[ ] ist die Sicherheitsinformation.

Leggere prima quanto segue!

ITALIANO

AVVISO:

Per prevenire ferite, questo apparecchio deve essere montato saldamente al pavimento/muro in conformità alle istruzioni di installazione.

AVVISO:

L'installazione deve essere realizzata unicamente da tecnici qualificati.
Un'installazione incorretta può risultare nella caduta dell'apparecchio con conseguenti danni alle persone.

PRECAUZIONE:

Durante il montaggio dell'unità al soffitto ecc., assicurarsi di utilizzare il montaggio su parete per un'installazione corretta. L'applicazione di altri tipi di montaggio o di altri metodi potrebbe causare gravi incidenti come una caduta.

[ ] sono le informazioni sulla sicurezza.

Прочитайте нижеследующее до начала эксплуатации!

РУССКИЙ

ОСТОРОЖНО:

Во избежание повреждения данный прибор должен быть надежно закреплен на полу/стене в соответствии с инструкцией по установке.

ОСТОРОЖНО:

Установка должна выполняться только квалифицированным специалистом по установке.
Ненадлежащая установка может привести к падению всего аппарата и получению травмы.

ПРЕДОСТЕРЕЖЕНИЕ:

При установке данного устройства на потолке и т. п., для правильной установки обязательно используйте настенное крепление, которое входит в комплект поставки. Монтаж с использованием других креплений или способов может стать причиной тяжелого несчастного случая, например, в результате падения.

[ ] Данный знак обозначает информацию, относящуюся к технике безопасности.

Installation Precautions

Panasonic does not accept any responsibility for accident or damage during installation if procedure in this manual is not followed.

To installation personnel

Read the “Installation Instructions” thoroughly and then perform the operation correctly and safely.
Also, always read the “Read this First!” of this manual as they contain important information.
After the installation, give the “Operating Instructions <Basics>” to the customer to save for future use.

■ Ensure that the installation work complies with the technical standards governing electrical equipment.

■ This unit is for indoor use only.

It cannot be used outdoors.
Avoid installation in a location where the unit will be exposed to direct sunlight for extended periods or near a cooling or heating appliance.
Otherwise, deformation, discoloration, malfunctioning and/or problems in operation may result. Operate the unit where it will not be splashed or sprayed by water.

■ Concerning the installation location

Install the unit in a stable location which will not be susceptible to shaking. If the unit is installed in a location which is susceptible to shaking, this will cause the unit’s images to shake in turn.
Install the unit after conferring in detail with your dealer.
Install the unit on a ceiling that is strong enough (such as a concrete ceiling).
If the unit is to be installed on a ceiling which is not strong enough, reinforce the ceiling sufficiently first.

■ Use the unit with an installation where the unit is suspended from an overhead surface or with a stand-alone installation.

Do not use the unit on its side or tilted at an angle.

[Note]

- Be absolutely sure to use the four bracket mounting screws (M4) for mounting the mount bracket. These are supplied with the unit.
  Do not use wood screws, nails, etc.
  In the case of a concrete ceiling, secure the unit using anchor bolts (for M4) or AY plug bolts (for M4).
  Recommended clamping torque M4 : 1.47 N · m {15 kgf · cm}
- The withdrawal strength of the mounting location for each screw must be at least 461 N {47 kgf}.
- When mounting the unit on a ceiling made of plasterboard, for instance, if it is not strong enough to support its weight, either reinforce the ceiling adequately or use the WV-Q105A direct ceiling mount bracket, which is sold separately.
- When using a mount bracket which is sold separately, read the handling instructions.

■ Do not install or use the unit in the following kinds of locations.

- On walls (where the unit would be installed sideways)
- In locations (including places such as under the eaves of a building) where the unit would be directly exposed to rain or water
- In locations such as kitchens where there are high concentrations of steam and grease
- In outdoor locations or hot places where the temperature will exceed 40˚C (104˚F)
- In cold locations where the temperature will drop below 0˚C (32 °F)
- In locations where the humidity will exceed 85%RH
- In locations where chemicals are used such as near swimming pools
- At sea, in coastal areas or in locations where corrosive gases are emitted
- In locations where radiation, X-rays, or strong radio waves or magnetic fields are generated
- In locations where the unit would be subject to a great deal of vibration such as on board a vehicle or ship (this unit is not designed to be used in vehicles)
- In locations where the temperature is subject to sudden changes such as near the air outlet of an air conditioner or near a door which allows the outside air to come in

■ Be absolutely sure to use the supplied brackets and screws to install the camera.

- Do not mount the unit by employing any methods other than those specified.
- Do not remodel the mounting bracket or mounting screws provided with the unit.

■ What to avoid to ensure that the unit will perform stably over a prolonged period

- Using the unit for a prolonged period in a location with high temperature and humidity levels will cause its parts to deteriorate and shorten its service life.
- Ensure that a cooling unit or heating unit will not blow any air directly toward the installation location.

■ Before installation, always disconnect the DC connector

When installing, always use the supplied components. Do not disassemble or modify the wall mount adaptor.

■ Tightening up the mounting screws

- Tighten up the screws and bolts securely to the degree that is appropriate for each of the materials used in the mounting location and structures.
- After tightening up the screws and bolts, check that there is no unsteadiness and that the parts have been tightened securely.
- Use the specified tools and tighten the screws firmly.
- Tighten up the screws using the specified torque driver. Do not use electrical drivers or impact drivers.

■ When the unit is no longer going to be used, do not leave it lying around, but be absolutely sure to dispose of it properly.

■ When installing, transferring or disposing of the unit, be absolutely sure to hold it by its pedestal area.

Problems may result if the camera head is held or rotated.

■ Do not attach a filter, hood, extender or other parts to the unit.

■ Install the external DC power supply near the main power outlet, and position it in such a way that its power plug can be plugged into and unplugged from the outlet easily.

When connecting the external DC power supply to a power outlet on the ceiling or on any other surface where dust may collect, wipe off the dust on the power plug at periodic intervals as an anti-tracking measure.

■ If there is a possibility of noise interference

Either wire the cables so that the power cable (ceiling light cord) of
AC 100 V (AC 220 V) or more, and the signal cable are placed at least 1 meter (3.3 ft.) apart.
Alternatively run each cable through its own metal conduit. (The metal conduits must be grounded.)

■ When connecting the cables, ensure that the connector areas will not be subject to any load.

Doing so may cause malfunctioning

■ Power switch

This unit does not have a power switch.
Before proceeding with maintenance, be absolutely sure to disconnect the power plug from the power outlet.
[Note]

- Under factory default conditions, the unit will be in Power ON mode when power is supplied for the first time. (Status display lamp: Lit green).
- When the power supply is cut off while the unit is in Standby mode, the unit will be in Standby mode the next time power is supplied. (Status display lamp: Lit orange)
- When the power supply is cut off while the unit is in Power ON mode, the unit will be in Power ON mode the next time power is supplied. (Status display lamp: Lit green)

■ Radio signal interference

If the unit is positioned near a TV or radio transmitting antenna or a strong electrical field or magnetic field (such as that generated by a motor, transformer or power lines), its images may be distorted and/ or the images may be affected by noise.

■ Allowing the generated heat to escape

This unit allows the heat generated inside to escape from its surfaces.
Do not install the unit in a location where it will be surrounded by walls or other surfaces and where heat will be trapped.
In addition, the heat is dissipated to the bottom panel which will warm up over time: This is normal and not indicative of any trouble.

■ PoE power supplies

Use a PoE [IEEE802.3af] compatible hub or power supply device.

■ Network settings

The network function of this unit does not work unless an initial account is set up (except when using the Easy IP Setup Software. A personal computer is required to set up an initial account.

[Note]

Network connection with AW-UE4 also requires setup of an initial account. When an initial account is not set up, AW-UE4 can detect but cannot control this unit.

How to Connect and Install the Unit

Be absolutely sure to read through the “Information for Your Safety” and “Installation precautions”.

1) Connect and install in the following order:
2) Checking the installation location
3) Preparing the power source
4) Ceiling-suspended Installation/Standing Installation/Mount to a Tripod
5) Connecting the cables

Checking the Installation Location

Refer to the illustration, and determine where the unit is to be installed and in which direction it should be mounted with due consideration for the unit and the wiring space on the back.

- Ensure that there is at least 200 mm (7-7/8) of space for wiring behind the rear cover. Unit: mm (inch)

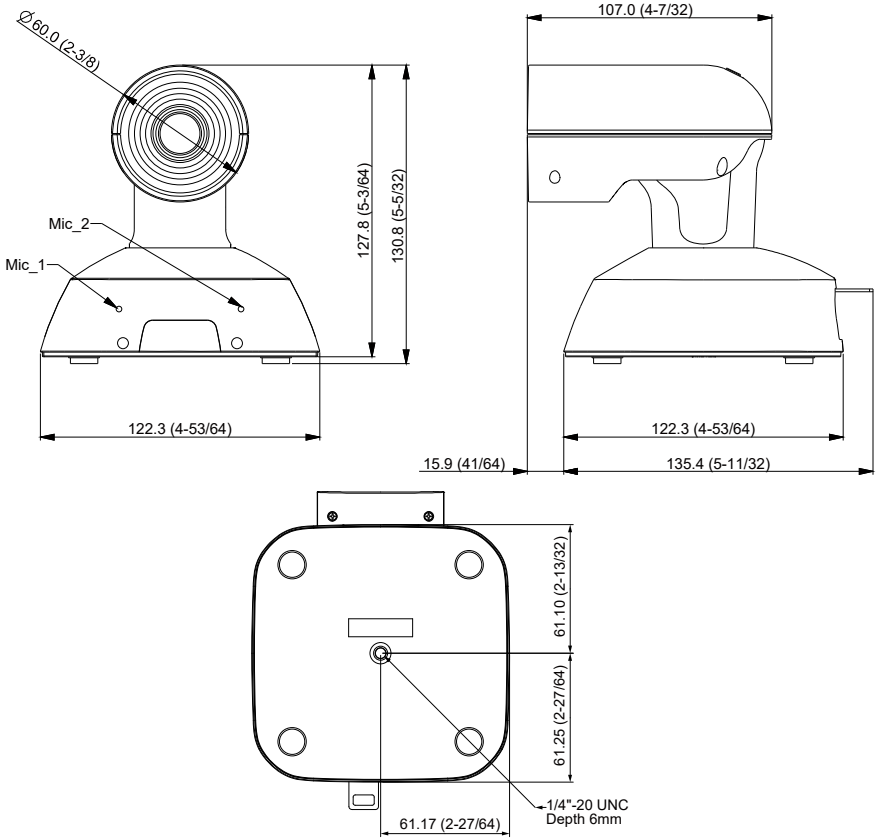

L-mount kit

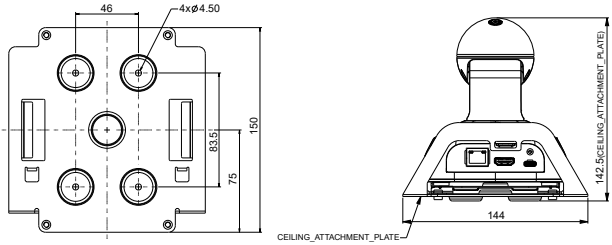

Preparing the Power Source

- Power can be provided through the USB cable connection from the connected device(ex: laptop, PC)
- Use the PoE switch/hub connect to LAN port and provide the power to the AW-UE4 unit.
- Please use AC adapter (5V, 1A or more) or PoE switch / Hub to output HDMI.
- **Warning:**
  This product is intended to be supplied by a UL Listed Power Adapter or DC power source marked "L.P.S." (or "Limited Power Source"), rated 5Vdc, 1.0A minimum, Tma =40 degree C minimum. If need further assistance, please contact Panasonic for further information.

Ceiling Mount Installation

- Do not use any screws other than those supplied with the unit (do not use wood screws, nails, etc.).
- Make sure the camera is firmly mounted to the ceiling, with no tilting or wobbling.

1. Install the mount kit (included) to bottom of the camera. Use the mount screw (included) to security the mount kit and camera.

Screw: I-head type, 1/4 x20 UNC
Clamping torque: 1.47N · m(15kgf · cm)

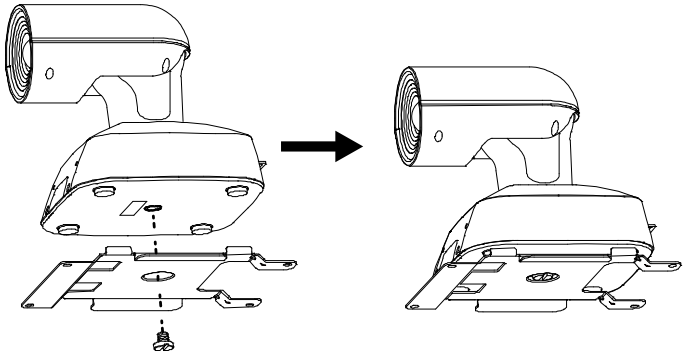

2. Use M4 10mm length screw (included) to secure the L-mount kit on the ceiling.

Screw: M4, 10mm length, bind-head Clamping torque: 1.47N · m(15kgf · cm)

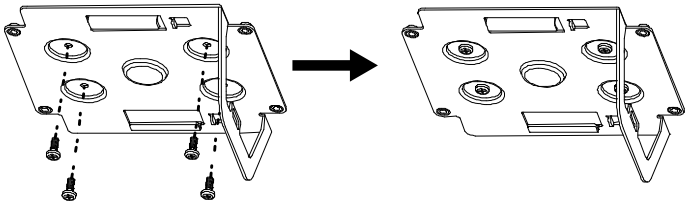

3. Slide the camera with mount kit is installed into L-mount as figure shown.

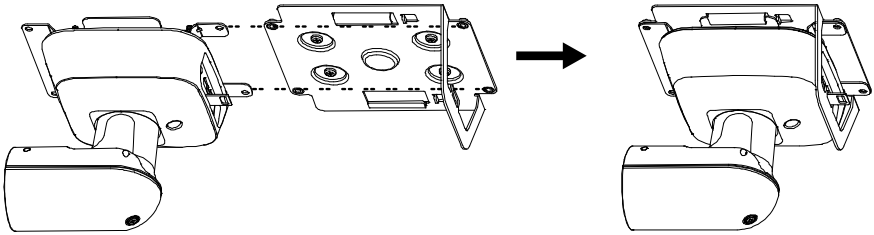

4. Use M4 5mm length screw (included) to secure the camera on the L-mount kit.

Screw: M4, 5mm length, bind-head Clamping torque: 1.47N · m(15kgf · cm)

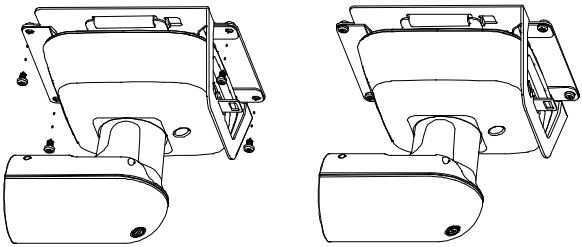

5. Mount the drop-prevention wire to the ceiling.

Attach the drop-prevention wire to the drop-prevention wire-mounting portion of the unit and secure to the ceiling panel with screws.
The drop-prevention wire is designed to be used for installation where the unit is suspended from an overhead surface so do not subject it to the weight of units other than the unit.

- Installation suggestion:

Screw: M4, bind-head
Clamping torque: 1.47N · m(15kgf · cm)
Ceiling: Concrete ceiling

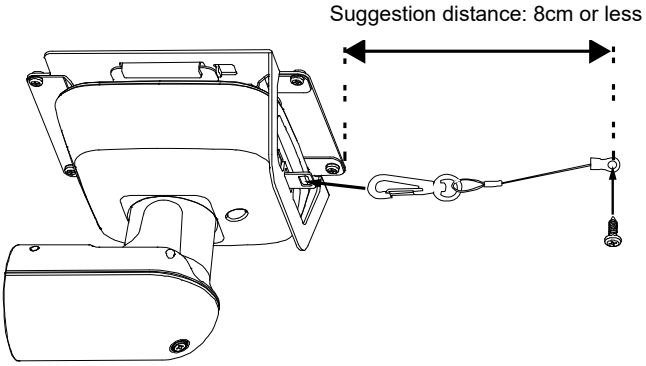

[Note] Do not do this work while holding the camera head since doing so may result in malfunctioning of the unit.

When using the WV-Q105A (optional accessory)

It is recommended that you provide an inspection opening or other such space for access purposes in the area near where the equipment is installed in order to facilitate installation and the wiring connections work.

Before mounting the mount bracket, check that the installation location is strong enough to withstand the total mass (approx. 4.7 kg (10.34 lb)) which will be exerted once the camera is mounted.

Use the mount bracket where the space between the ceiling panel and the concrete ceiling is at least 100 mm (3-15/16 inches) high. The bracket can be mounted where the thickness of the ceiling panel ranges from 5 mm (3/16 inches) to 40 mm (1-9/16 inches).

The drop-prevention wire (supplied with the WV-Q105A) must be used when mounting the direct ceiling mount bracket.

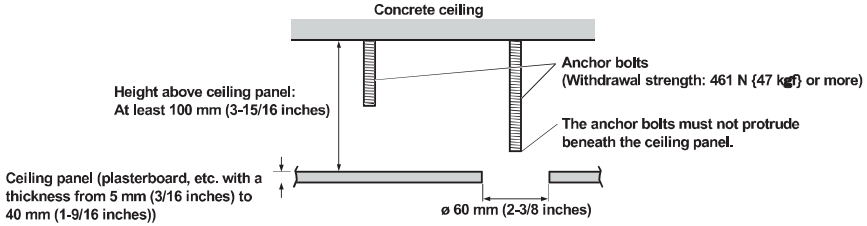

1. **Refer to the Operating Instructions of the WV-Q105A direct ceiling mount bracket, and attach the WV-Q105A as well as the drop-prevention wire angle and drop-prevention wire supplied with the WV-Q105A to the anchor bolts.**

> **Mounting the anchor bolts and direct ceiling mount bracket (□)**
> This job is facilitated if the direct ceiling mount bracket is loosely secured to the ceiling panel in one place, and the direct ceiling mount bracket and anchor bolts are vertically aligned before the nuts are tightened up.

2. **First, remove the screws which were loosely fastened in step 1, and then align the camera mount bracket of the AW-UE4 with the screw holes in the WV-Q105A direct ceiling mount bracket and mount it in place.**
   - Use the mounting screws (the M4-L60 Phillips head screws with adhesive) supplied with the WV-Q105A as the mounting screws.

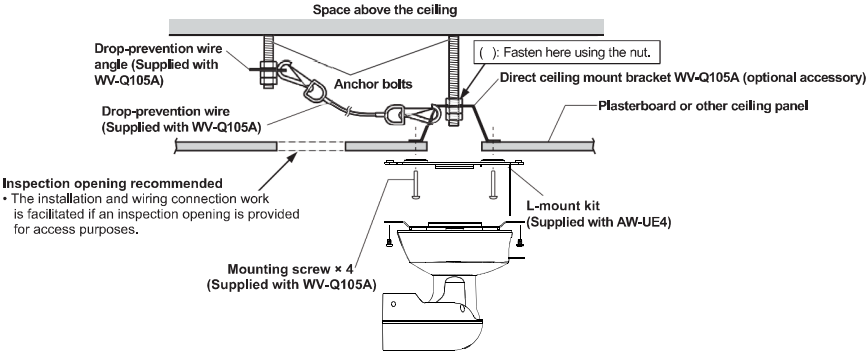

Stand-alone installation

(when the mount bracket is not going to be used)

■ When installing the unit on a desktop

Place the unit flat on the surface.

[Note]

- Install the unit in a stable location which will not be susceptible to shaking. If the unit is installed in a location which is susceptible to shaking, this will cause the unit's images to shake in turn.
- Take care not to allow the unit to fall or otherwise be damaged during installation.
- When carrying the unit, do not hold it by its head.
- Take care not to pull the connected cables. Doing so may cause the unit to fall and/or it may result in injury.

  Ensure that the unit will not fall off.

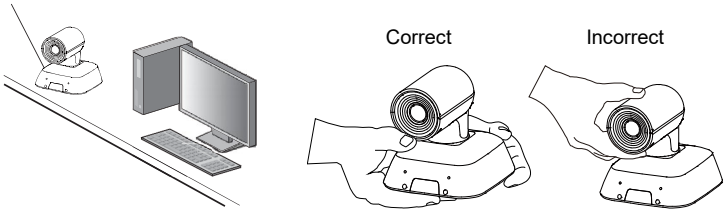

■ When mounting the unit on a tripod

Attach the tripod to the threaded holes for mounting the camera on the camera's bottom panel. Place the tripod on a completely flat and level surface.

Tighten the screws by hand to mount the tripod securely.

Use screw for mounting tripod that satisfy the following standard.

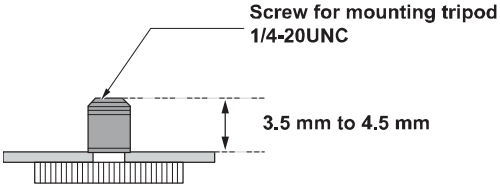

[Note]

- Do not install the unit where people will be passing back and forth.
- When using the unit mounted on a tripod, do not put the tripod high above the floor level.
- Mount the unit securely so there is no looseness. Looseness may cause the unit to fall off and/or result in injuries.
- When the unit is going to be used for a prolonged period of time, take steps to ensure that the unit will not topple or fall over and that it will not fall off or fall down. After using the unit, restore the installation location to its original state without delay.

Connecting Cables

[Note]

- After installing the unit on a ceiling, secure the drop-prevention wire in the space above the ceiling panel and connect the LAN cable, the HDMI cable or USB cable.
- Please use “High Speed HDMI Cables” that have the HDMI logo (as show below the HDMI connector). Cables not conforming to the HDMI standard will not work.
- Always use a USB cable that is included in accessories.
- Remember to screw tight the USB cable with the additional screw on the USB cable.

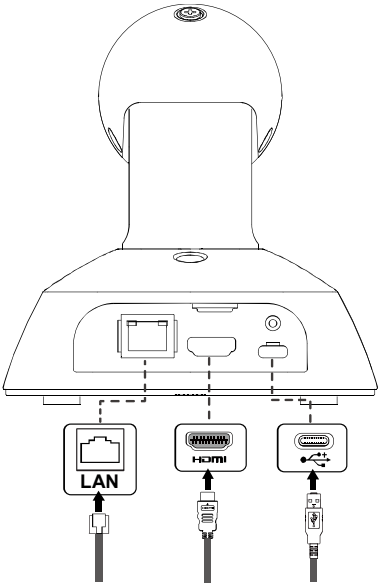

Connecting with HDMI Monitor

A. HDMI cable:
   An HDMI video/audio signal is output.
B. Wireless remote control (optional)
C. USB cable(connect power adapter for external power supply)

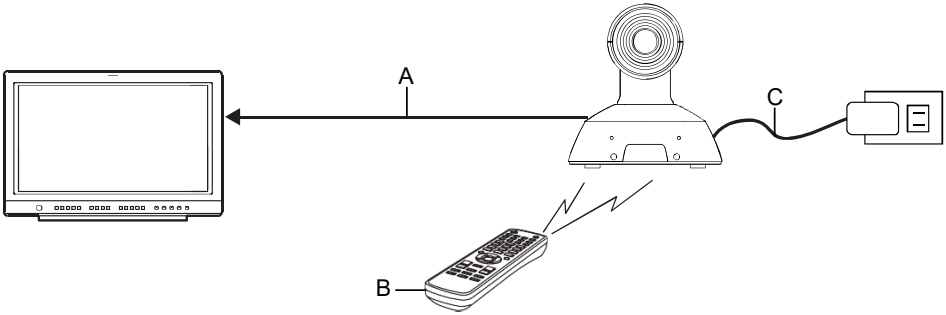

[Note] Please use “High Speed HDMI Cables” that have the HDMI logo (as shown below the HDMI connector). Cables not conforming to the HDMI standard will not work.

System example 1 (IP control, PoE)

: HDMI cable

: LAN cable

: Use an appropriate cable to suit the connected devices.

A. HDMI/SDI converter

B. Remote Camera Controller AW-RP60

C. PoE switching hub

D. Monitor 1/Monitor 2

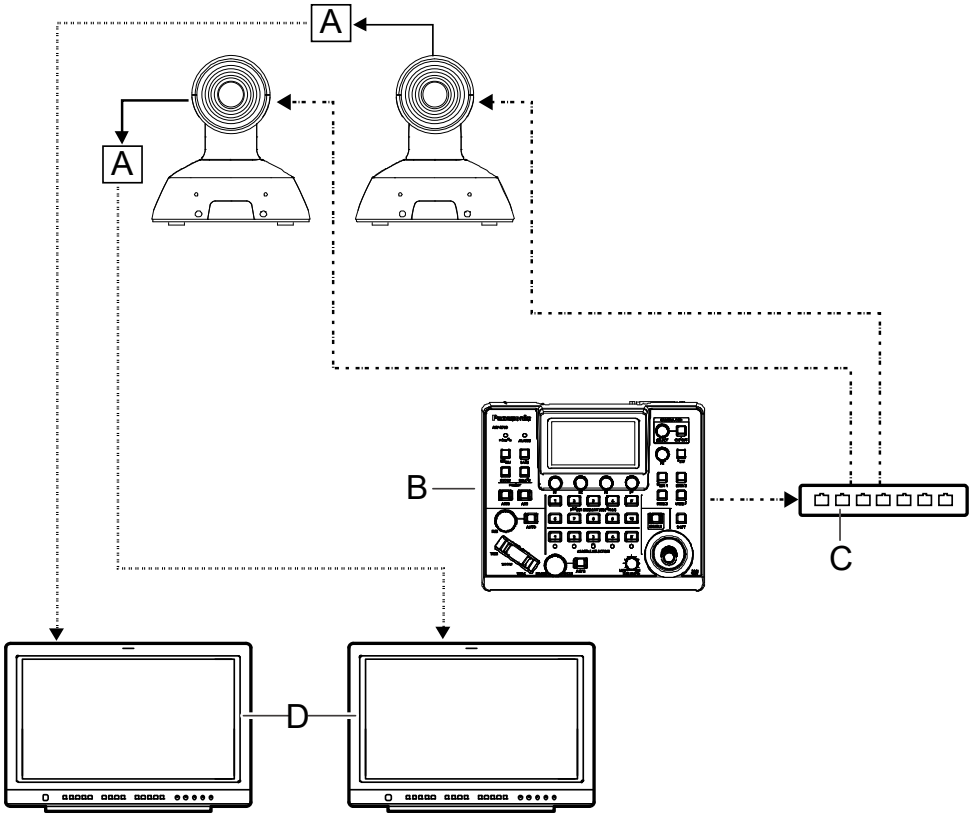

[Note] Use a category 5e cable for the LAN cable.

System example 2 (IP image transmission, PoE)

◄———— : LAN cable

A. LAN connector

B. Personal computer

C. PoE compatible switching hub or PoE injector

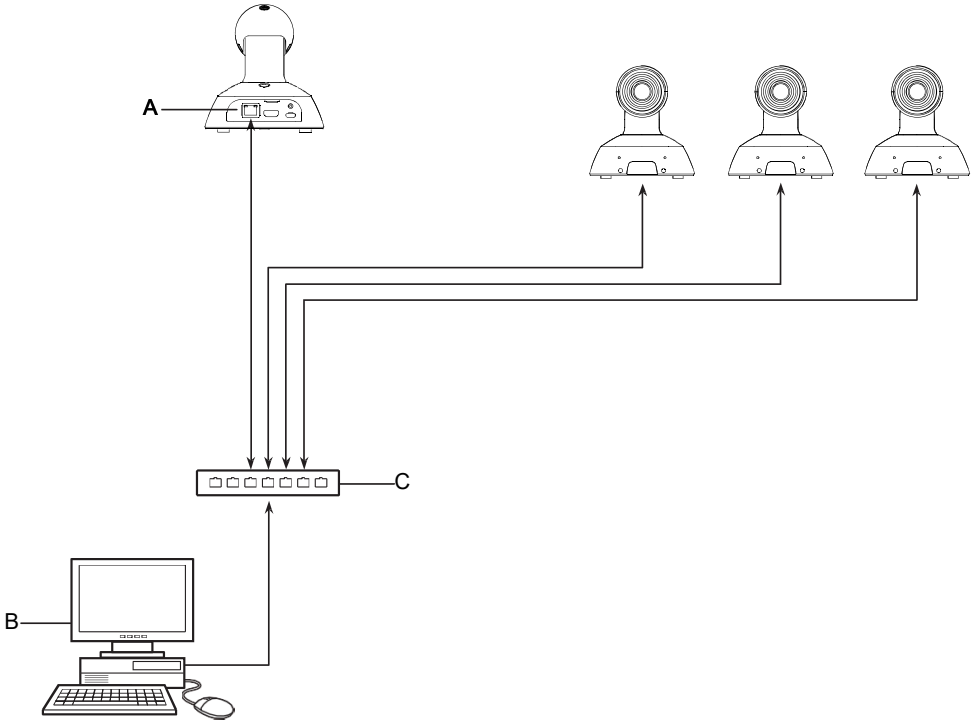

System example 3 (USB connection)

← : USB cable(with power supply from connected device)

A. Personal computer

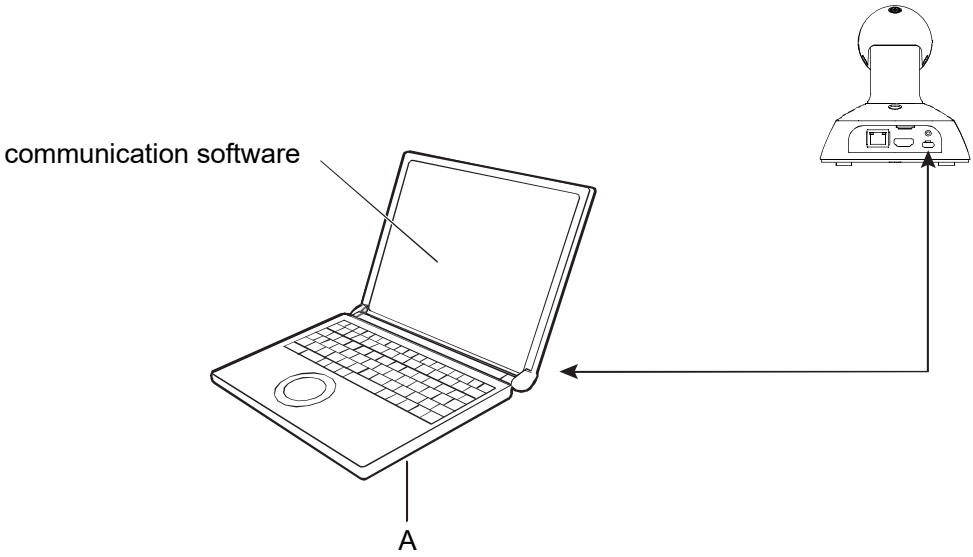

Read this First!

WARNING:

- To reduce the risk of fire or electric shock, do not expose this equipment to rain or moisture.
- To reduce the risk of fire or electric shock, keep this equipment away from all liquids. Use and store only in locations which are not exposed to the risk of dripping or splashing liquids, and do not place any liquid containers on top of the equipment.

WARNING:

Always keep the main unit mounting screw, bracket mounting screws and drop-prevention wire mounting screw out of the reach of infants and small children.

WARNING:

This equipment is compliant with Class A of CISPR 32.
In a residential environment this equipment may cause radio interference.

CAUTION:

Do not remove panel covers by unscrewing.
To reduce the risk of electric shock, do not remove the covers. No user serviceable parts inside.
Refer servicing to qualified service personnel.

CAUTION:

In order to maintain adequate ventilation, do not install or place this unit in a bookcase, built-in cabinet or any other confined space. To prevent risk of electric shock or fire hazard due to overheating, ensure that curtains and any other materials do not obstruct the ventilation.

CAUTION:

To reduce the risk of fire or electric shock and annoying interference, use the recommended accessories only.

CAUTION:

Check the installation at least once a year.
An improper installation could cause the unit to fall off resulting in personal injury.

CAUTION:

Do not pick up and move the unit while the tripod is attached.
The fitting may break under the weight of the tripod, which may result in injury.

[ ] indicates safety information.

FCC NOTICE (USA)

Supplier's Declaration of Conformity
Trade Name: Panasonic
Model Number: AW-UE4KG, AW-UE4KGN, AW-UE4WG, AW-UE4WGN
Responsible Party: Panasonic Corporation of North America Two Riverfront Plaza, Newark, NJ 07102
Support contact: 1-800-524-1448

This device complies with part 15 of the FCC Rules.
Operation is subject to the following two conditions:
(1) This device may not cause harmful interference, and (2) this device must accept any interference received, including interference that may cause undesired operation.

FCC Warning:

To assure continued FCC emission limit compliance, follow the attached installation instructions and the user must use only shielded interface cables when connecting to host computer or peripheral devices. Also, any unauthorized changes or modifications to this equipment could void the user's authority to operate this device.

FCC CAUTION:

This equipment has been tested and found to comply with the limits for a class A digital device, pursuant to Part 15 of the FCC Rules. These limits are designed to provide reasonable protection against harmful interference when the equipment is operated in a commercial environment. This equipment generates, uses, and can radiate radio frequency energy and, if not installed and used in accordance with the instruction manual, may cause harmful interference to radio communications.
Operation of this equipment in a residential area is likely to cause harmful interference in which case the user will be required to correct the interference at his own expense.

NOTIFICATION (Canada)

CAN ICES(A)/NMB(A)

Turkey Only
AEEE Yönetmeliğine Uygundur.
AEEE Complies with Directive of Turkey.

EMC NOTICE FOR THE PURCHASER/USER OF THE APPARATUS

1. Pre-requisite conditions to achieving compliance with the above standards

<1> Peripheral equipment to be connected to the apparatus and special connecting cables

- The purchaser/user is urged to use only equipment which has been recommended by us as peripheral equipment to be connected to the apparatus.
- The purchaser/user is urged to use only the connecting cables described below.

<2> For the connecting cables, use shielded cables which suit the intended purpose of the apparatus.

- Video signal connecting cables
  Use double shielded coaxial cables, which are designed for 75-ohm type high-frequency applications, for SDI (Serial Digital Interface).
  Coaxial cables, which are designed for 75-ohm type high-frequency applications, are recommended for analog video signals.
- Audio signal connecting cables
  If your apparatus supports AES/EBU serial digital audio signals, use cables designed for AES/EBU.
  Use shielded cables, which provide quality performance for high-frequency transmission applications, for analog audio signals.
- Other connecting cables (IEEE1394, USB)
  Use double shielded cables, which provide quality performance for high-frequency applications, as connecting cables.
- When connecting to the DVI signal terminal, use a cable with a ferrite core.
- If your apparatus is supplied with ferrite core(s), they must be attached on cable(s) following instructions in this manual.

2. Performance level

The performance level of the apparatus is equivalent to or better than the performance level required by these standards.
However, the apparatus may be adversely affected by interference if it is being used in an EMC environment, such as an area where strong electromagnetic fields are generated (by the presence of signal transmission towers, cellular phones, etc.). In order to minimize the adverse effects of the interference on the apparatus in cases like this, it is recommended that the following steps be taken with the apparatus being affected and with its operating environment:

1. Place the apparatus at a distance from the source of the interference.
2. Change the direction of the apparatus.
3. Change the connection method used for the apparatus.
4. Connect the apparatus to another power outlet where the power is not shared by any other appliances.

Disposal of Old Equipment
Only for European Union and countries with recycling systems
This symbol on the products, packaging, and/or accompanying documents means that used electrical and electronic products must not be mixed with general household waste. For proper treatment, recovery and recycling of old products, please take them to applicable collection points in accordance with your national legislation.
By disposing of them correctly, you will help to save valuable resources and prevent any potential negative effects on human health and the environment. For more information about collection and recycling, please contact your local authority, dealer or supplier. Penalties may be applicable for incorrect disposal of this waste, in accordance with national legislation.

Manufactured by: Panasonic Corporation
1006 Kadoma, Kadoma City, Osaka, Japan
Importer: Panasonic Connect Europe GmbH
Hagenauer Strasse 43, 65203 Wiesbaden, Germany
Authorized Representative in EU: Panasonic Connect Europe GmbH
Panasonic Testing Centre
Winsbergring 15, 22525 Hamburg, Germany
Importer for UK: Panasonic Connect UK,
a branch of Panasonic Connect Europe GmbH,
Maxis 2, Western Road, Bracknell, Berkshire, RG12 1RT

UK CA

■ **The symbols on this product (including the accessories) represent the following. (Some symbols are not displayed on this unit.)**

I	ON
⏻	Standby (OFF)
~	AC
⎓	DC
⧈	Class II equipment (The construction of the product is double-insulated.)

Інформація для покупця

Виробник:	Panasonic Corporation	Панасонік Корпорация
Адреса виробника:	Kadoma, Osaka, Japan	Кадома Осака Японія
Країна походження:	Taiwan	Тайвань

Імпортер:	ТОВ “ПАНАСОНІК УКРАЇНА ЛТД”
Адреса імпортера:	вул. Васильківська, буд. 30, м. Київ 03022, Україна

Примітки:

Термін служби виробу	7 років

Дата виготовлення може бути визначена за допомогою комбінації літер та цифр серійного номера, розташованого на продукті.

Приклад: X X XXXXXXX

Рік: остання цифра року (7 – 2017, 8 – 2018,…0 – 2020)	
Місяць: A – Січень, B – Лютий… L – Грудень	

Lire ces informations en premier!

FRANÇAIS

AVERTISSEMENT:

- Pour réduire les risques d'incendie ou de choc électrique, évitez d'exposer cet appareil à la pluie ou à l'humidité.
- Pour réduire tout risque de feu ou de choc électrique, éloigner l'appareil des liquides — utiliser et ranger uniquement dans un endroitne risquant pas de recevoir des gouttes ou d'être aspergé de liquides, et ne pas mettre de récipient renfermant des liquides sur le dessus de l'appareil.

AVERTISSEMENT:

Gardez toujours la vis de montage de l'appareil principal, celles de montage de la potence et celle de montage du fil antichute hors de portée des enfants et des nourissons.

AVERTISSEMENT:

Cet appareil est conforme à la Classe A de la norme CISPR 32.
Dans un environnement résidentiel, cet appareil peut provoquer des interférences radio.

ATTENTION:

Ne pas dévisser le couvercle.
Pour réduire tout risque d'électrocution, ne pas retirer le couvercle. Il ne se trouve à l'intérieur aucune pièce qui puisse être réparée par l'utilisateur.
Confier toute réparation à un personnel qualifié.

ATTENTION:

Pour maintenir une bonne ventilation, ne pas installer ni placer l'appareil dans une étagère, un meuble encastré ni aucun endroit confiné.
Pour éviter tout risque de choc électrique ou de feu dû à une surchauffe, vérifier qu'aucun rideau ni aucun autre matériau ne fait obstacle à la ventilation.

ATTENTION:

Pour éviter tout risque d'incendie, de chocs électriques ou d'interférences, n'utiliser que les accessoires recommandés.

ATTENTION:

Vérifiez l'installation au moins une fois par an.
Une mauvaise installation peut provoquer la chute de l'appareil et engendrer des blessures.

ATTENTION:

Ne pas soulever et déplacer l'appareil quand le trépied est en place.
L'attache risque de se casser sous le poids du trépied, ce qui peut entraîner des blessures

Informations concernant la sécurité.

NOTE D'INFORMATION SUR LA CEM POUR L'ACHETEUR/UTILISATEUR DE L'APPAREIL

1. Conditions requises pour obtenir la conformité aux normes ci-dessus

<1> Equipements périphériques à connecter à l'appareil et câbles de connexion spéciaux

- L'acheteur/utilisateur est invité à utiliser uniquement des équipements recommandés par notre société comme équipements périphériques à connecter à l'appareil.
- L'acheteur/utilisateur est invité à n'utiliser que les câbles de connexion décrits ci-dessous.

<2> Pour les câbles de connexion, utilisez des câbles blindés appropriés à l'utilisation de l'appareil.

- Câbles de connexion signal vidéo
  Utilisez des câbles coaxiaux blindés, conçus pour des applications à haute fréquence du type 75 ohms, pour la SDI (Serial Digital Interface).
  Les câbles coaxiaux, conçus pour des applications à haute fréquence du type 75 ohms, sont conseillés pour les signaux vidéo analogiques.
- Câbles de connexion signal audio
  Si votre appareil prend en charge les signaux audio numériques série AES/EBU, utilisez des câbles conçus pour AES/EBU.
  Utilisez des câbles blindés, qui assure des performances de qualité pour les applications de transmission haute fréquence, pour les signaux audio analogiques.
- Autres câbles de connexion (IEEE1394, USB)
  Utilisez des câbles blindés, qui assurent des performances de qualité pour les applications haute fréquence, comme des câbles de connexion.
- Lors du raccordement à la borne de signal DVI, utilisez un câble avec un noyau de ferrite.
- Si votre appareil est fourni avec un ou plusieurs tore(s) magnétique(s), ils doivent être fixés sur le(s) câble(s) selon les instructions figurant dans la présent manuel.

2. Niveau de performance

Le niveau de performance de l'appareil est équivalent ou supérieur au niveau de performance requis par les normes en question.
Cependant, l'appareil pourrait être affecté de façon négative par des interférences s'il est utilisé dans un environnement CEM, tel qu'une zone où de forts champs électromagnétiques sont générés (par la présence de pylônes de transmission, téléphones portables etc.). Pour réduire au minimum les effets négatifs des interférences sur l'appareil dans des cas de ce genre, il est conseillé d'adopter les mesures suivantes en ce qui concerne l'appareil concerné et son environnement de fonctionnement:

1. Placez l'appareil à une certaine distance de la sources des interférences.
2. Changez la direction de l'appareil.
3. Changez la méthode de connexion utilisée pour l'appareil.
4. Connectez l'appareil à une autre prise électrique sur laquelle l'alimentation n'est partagée par aucun autre appareil.

L'élimination des équipements usagés

Applicable uniquement dans les pays membres de l'Union européenne et les pays disposant de systèmes de recyclage.

Apposé sur le produit lui-même, sur son emballage, ou figurant dans la documentation qui l'accompagne, ce pictogramme indique que les appareils électriques et électroniques usagés, doivent être séparés des ordures ménagères.

Afin de permettre le traitement, la valorisation et le recyclage adéquats des appareils usagés, veuillez les porter à l'un des points de collecte prévus, conformément à la législation nationale en vigueur.

En les éliminant conformément à la réglementation en vigueur, vous contribuez à éviter le gaspillage de ressources précieuses ainsi qu'à protéger la santé humaine et l'environnement. Pour de plus amples renseignements sur la collecte et le recyclage, veuillez vous renseigner auprès des collectivités locales, votre revendeur ou fournisseur.

Le non-respect de la réglementation relative à l'élimination des déchets est passible d'une peine d'amende.

Fabriqué par: Panasonic Corporation
1006 Kadoma, ville de Kadoma, Osaka, Japon
Importateur : Panasonic Connect Europe GmbH
Hagenauer Strasse 43, 65203 Wiesbaden, Allemagne
Représentant autorisé dans l'UE : Panasonic Connect Europe GmbH
Panasonic Testing Centre
Winsbergring 15, 22525 Hambourg, Allemagne

■ Les symboles présents sur ce produit (y compris sur les accessoires) signifient les choses suivantes. (Ne sont pas représentés sur certains produits.)

I	MARCHE
⏻	Veille (ARRÊT)
~	CA
⎓	CC
⧈	Équipement de Classe II (Le produit a été fabriqué avec une double isolation.)

Lea esto primero!

ESPAÑOL

ADVERTENCIA:

- Para reducir el riesgo de producir un incendio o recibir una descarga eléctrica, no exponga este equipo a la lluvia ni a la humedad.
- Para reducir el riesgo de incendio o sacudida eléctrica, mantenga este equipo alejado de todos los líquidos. Utilícelo y guárdelo solamente en lugares donde no corra el riesgo de que le caigan gotas o le salpiquen líquidos, y no coloque ningún recipiente de líquidos encima del equipo.

ADVERTENCIA:

Mantenga siempre el tornillo de montaje de la unidad, los tornillos de montaje de la ménsula y el tornillo de montaje del cable para evitar caídas fuera del alcance de los niños y bebés.

ADVERTENCIA:

Este equipo es compatible con la Clase A de CISPR 32.
En un entorno residencial, este equipo puede causar interferencias de radio.

PRECAUCIÓN:

No quite la cubierta desatornillándola.
No quite la tapa para evitar el riesgo de sacudidas eléctricas. Las piezas del interior no requieren mantenimiento por parte del usuario.
Solicite las reparaciones al personal de servicio calificado.

PRECAUCIÓN:

Para mantener unas buenas condiciones de ventilación, no instale ni ponga este aparato en una librería, mueble empotrado u otro espacio reducido. Para evitar el riesgo de que se produzcan sacudidas eléctricas o peligros de incendio debidos al recalentamiento, asegúrese de que las cortinas y otros materiales no obstruyan la ventilación.

PRECAUCIÓN:

Para reducir el riesgo de incendios, sacudidas eléctricas e interferencias molestas, utilice solamente los accesorios recomendados.

PRECAUCIÓN:

Compruebe la instalación al menos una vez al año.
Una instalación incorrecta podría provocar la caída de la unidad, lo cual podría causar lesiones al usuario.

PRECAUCIÓN:

No agarre ni mueva la unidad estando ésta colocada en el trípode.
El adaptador podría romperse debido al peso del trípode, lo que podría causarle lesiones

indica información de seguridad.

AVISO SOBRE CEM PARA EL COMPRADOR/USUARIO DEL APARATO

1. Condiciones previas para conseguir la conformidad con las normas mencionadas

<1> Equipo periférico por conectar al aparato y cables de conexión especiales

- Se recomienda que el comprador/usuario utilice solo equipos recomendados por nosotros como equipos periféricos que se pueden conectar al aparato.
- Se recomienda que el comprador/usuario utilice solo los cables de conexión descritos más abajo.

<2> Para los cables de conexión, utilizar cables apantallados que se ajusten al destino del aparato.

- Cables de conexión de señales de vídeo
  Utilizar cables coaxiales apantallados dobles, diseñados para aplicaciones de alta frecuencia del tipo de 75 ohm, para SDI (Interfaz digital en serie).
  Cables coaxiales, diseñados para aplicaciones de alta frecuencia del tipo de 75 ohm, están recomendados para señales de vídeo analógicas.
- Cables de conexión de señales de audio
  Si el aparato es compatible con las señales de audio digitales en serie AES/EBU, utilizar cables diseñados para AES/EBU.
  Utilizar cables apantallados, que proporcionan un rendimiento de calidad para aplicaciones de transmisión en alta frecuencia, para señales de audio analógicas.
- Otros cables de conexión (IEEE1394, USB)
  Utilizar cables apantallados, que proporcionan un rendimiento de calidad para aplicaciones de transmisión en alta frecuencia, como cables de conexión.
- Para conectar el terminal de señales DVI, utilice un cable con un núcleo de ferrita.
- Si el aparato está equipado con núcleo(s) de ferrita, tiene que conectarse al cable(s) siguiendo las instrucciones contenidas en este manual.

2. Nivel de rendimiento

El nivel de rendimiento del aparato es equivalente a o mejor respecto al nivel de rendimiento requerido por estas normas.
Sin embargo, el aparato puede quedar perjudicado por las interferencias si se está utilizando en un ambiente CEM, como una zona donde haya fuertes campos electromagnéticos (generados por la presencia de torres de transmisión de señales, teléfonos móviles, etc.). Para minimizar los efectos negativos de la interferencia en el aparato en casos como éste, se recomienda llevar a cabo las siguientes operaciones en el aparato afectado y en su ambiente de funcionamiento.

1. Colocar el aparato a cierta distancia de la fuente de la interferencia:
2. Cambiar de dirección el aparato.
3. Cambiar el método de conexión utilizado para el aparato.
4. Conectar el aparato a otra toma de corriente que no comparta su energía con otros dispositivos.

Eliminación de Aparatos Viejos

Solamente para la Unión Europea y países con sistemas de reciclado.

Este símbolo en los productos, su embalaje o en los documentos que los acompañen significa que los productos eléctricos y electrónicos usadas no deben mezclarse con los residuos domésticos.

Para el adecuado tratamiento, recuperación y reciclaje de los productos viejos llévelos a los puntos de recogida de acuerdo con su legislación nacional.

Si los elimina correctamente ayudará a preservar valiosos recursos y evitará potenciales efectos negativos sobre la salud de las personas y sobre el medio ambiente. Para más información sobre la recogida o reciclaje, por favor contacte con su ayuntamiento, su distribuidor o su proveedor.

Puede haber sanciones por una incorrecta eliminación de este residuo, de acuerdo con la legislación nacional

Fabricado por: Panasonic Corporation
1006 Kadoma, Ciudad de Kadoma, Osaka, Japón
Importador: Panasonic Connect Europe GmbH
Hagenauer Strasse 43, 65203 Wiesbaden, Alemania
Representante Autorizado para la UE: Panasonic Connect Europe GmbH
Panasonic Testing Centre
Winsbergring 15, 22525 Hamburgo, Alemania

■ Los símbolos en este producto (incluidos los accesorios) representan lo siguiente. (Algunos productos no están representados.)

I	ENCENDIDO
⏻	En espera (APAGADO)
~	CA
⎓	CC
⧈	Equipamiento de Clase II (Producto fabricado con aislamiento doble.)

Bitte lesen Sie zuerst diesen Hinweis!

DEUTSCH

WARNUNG:

- Zur Reduzierung der Gefahr von Brand und elektrischem Schlag dieses Gerät weder Nässe noch Feuchtigkeit aussetzen.
- Um Brand- oder Stromschlaggefahr zu reduzieren, muss dieses Gerät von allen Flüssigkeiten ferngehalten werden. Vermeiden sie Gebrauch und Lagerung des Gerätes an Orten, an denen die Gefahr besteht, dass es mit Flüssigkeiten betropft oder bespritzt wird, und stellen sie keine Flüssigkeitsbehälter auf das Gerät.

WARNUNG:

Bewahren Sie die Haupteinheit-Befestigungsschrauben, die Halterungs-Befestigungsschrauben und die Befestigungsschraube für Fallschutzdraht stets außer Reichweite von Säuglingen und Kleinkindern auf.

WARNUNG:

Dieses Gerät ist mit der Klasse A von CISPR 32 kompatibel.
In einer Wohngegend kann dieses Gerät Funkstörungen verursachen.

VORSICHT:

Öffnen Sie nicht das Gerät durch Abschrauben von Gehäuseteilen.
Zur Vermeidung von elektrischem Schlag darf das Gehäuse nicht geöffnet werden. Im Geräteinneren befinden sich keine Teile, die vom Benutzer gewartet werden können.
Wartungs- und Reparaturarbeiten grundsätzlich autorisiertem Kundendienstpersonal überlassen.

VORSICHT:

Um eine ausreichende Belüftung zu gewährleisten, dieses Gerät nicht in einem Bücherregal, Einbauschrank oder an einem anderen engen Platz aufstellen. Sicherstellen, dass die Ventilationsöffnungen im Gehäuse nicht durch Vorhänge oder andere Materialien blockiert werden; anderenfalls besteht die Gefahr von elektrischem Schlag oder Feuer aufgrund von Überhitzung.

VORSICHT:

Nur das empfohlene Zubehör verwenden, um die Gefahr von Feuer und elektrischem Schlag sowie Störungen auszuschalten.

VORSICHT:

Die Installation ist mindestens einmal jährlich zu überprüfen.
Bei fehlerhafter Installation besteht Verletzungsgefahr durch Herunterfallen des Gerätes.

VORSICHT:

Unterlassen Sie das Aufheben und Transportieren des Gerätes bei angebrachtem Stativ.
Die Fassung kann unter dem Gewicht des Stativs brechen, was zu einer Verletzung führen kann

[ ] ist die Sicherheitsinformation.

EMV-HINWEIS FÜR DEN KÄUFER/ANWENDER DES GERÄTS

1. Erforderliche Bedingungen zur Einhaltung der oben genannten Standards

<1> An das Gerät angeschlossene Geräte und spezielle Verbindungskabel

- Der Käufer/Anwender sollte nur Geräte verwenden, die von uns als Zusatzgeräte für den Anschluss an das Gerät empfohlen wurden.
- Der Käufer/Anwender sollte nur die unten aufgeführten Verbindungskabel verwenden.

<2> Für den Anschluss abgeschirmte Kabel verwenden, die dem Gerätezweck entsprechen

- Videokabel
  Für SDI (Serial Digital Interface) doppelt abgeschirmte 75-Ohm HF-Koaxialkabel verwenden.
  Für analoge Videosignale werden 75-Ohm HF-Koaxialkabel empfohlen.
- Audiokabel
  Verwenden Sie Kabel für AES/EBU, wenn Ihr Gerät serielle digitale AES/EBU-Audiosignale unterstützt.
  Verwenden Sie für analoge Audiosignale abgeschirmte Kabel für hochwertige HF-Übertragungen.
- Weitere Kabel (IEEE1394, USB)
  Verwenden Sie abgeschirmte Kabel für hochwertige HF-Anwendungen.
- Für die Verbindung zum DVI-Signalanschluss muss ein Kabel mit Ferritkern verwendet werden.
- Wird Ihr Gerät mit Ferritkernen geliefert, müssen diese an den Kabeln befestigt werden, siehe Angaben in dieser Anleitung.

2. Leistungsniveau

Das Leistungsniveau des Geräts entspricht oder übersteigt das von diesen Standards verlangte Leistungsniveau.
Das Gerät kann aber durch Nutzung in einer EMV-Umgebung, wie Bereichen mit starken elektromagnetischen Feldern (durch Sendemasten, Mobiltelefone etc.) störend beeinflusst werden.
Um in diesen Situationen die störenden Einflüsse auf das Gerät zu minimieren wird empfohlen, folgende Schritte für betroffene Geräte und Betriebsumgebungen durchzuführen:

1. Positionieren Sie das Gerät von der Störquelle entfernt.
2. Ändern Sie die Geräterichtung.
3. Ändern Sie die Anschlussmethode des Geräts.
4. Schließen Sie das Gerät an eine andere Stromverbindung, die mit keinen weiteren Geräten geteilt wird.

Entsorgung von Altgeräten

Nur für die Europäische Union und Länder mit Recyclingsystemen

Dieses Symbol, auf den Produkten, der Verpackung und/oder den Begleitdokumenten, bedeutet, dass gebrauchte elektrische und elektronische Produkte nicht in den allgemeinen Hausmüll gegeben werden dürfen.

Bitte führen Sie alte Produkte zur Behandlung, Aufarbeitung bzw. zum Recycling gemäß den gesetzlichen Bestimmungen den zuständigen Sammelpunkten zu.

Indem Sie diese Produkte ordnungsgemäß entsorgen, helfen Sie dabei, wertvolle Ressourcen zu schützen und eventuelle negative Auswirkungen auf die menschliche Gesundheit und die Umwelt zu vermeiden. Für mehr Informationen zu Sammlung und Recycling, wenden Sie sich bitte an Ihren örtlichen Abfallentsorgungsdienstleister, Händler oder Zulieferer.

Gemäß Landesvorschriften können wegen nicht ordnungsgemäßer Entsorgung dieses Abfalls Strafgelder verhängt werden

Hergestellt von: Panasonic Corporation
1006 Kadoma, Kadoma City, Osaka, Japan
Importeur: Panasonic Connect Europe GmbH
Hagenauer Strasse 43, 65203 Wiesbaden, Deutschland
Vertretungsberechtigter in der EU: Panasonic Connect Europe GmbH
Panasonic Testing Centre
Winsbergring 15, 22525 Hamburg, Deutschland

■ Die Symbole an diesem Produkt (einschließlich Zubehör) haben die folgenden Bedeutungen. (Nicht bei allen Produkten vorhanden.)

I	EIN
⏻	Standby (AUS)
~	Wechselstrom
⎓	Gleichstrom
⧈	Geräte der Klasse II (das Produkt wurde mit doppelter Isolierung konstruiert.)

Leggere prima quanto segue!

ITALIANO

AVVISO:

- Per ridurre il rischio d'incendio o di scosse, non esporre questo prodotto alla pioggia o all'umidità.
- Per ridurre il rischio d'incendio o di scosse elettriche, tenere questo prodotto lontano da tutti i liquidi. Usarlo e conservarlo soltanto in luoghi che non siano esposti a gocciolamenti o spruzzi di liquidi, e non mettervi sopra recipienti di liquidi.

AVVISO:

Mantenere sempre la vite di montaggio dell'unità principale, le viti di montaggio staffa e la vite di montaggio del cavo anticaduta lontano dalla portata dei bambini.

AVVISO:

Questa apparecchiatura è conforme alla Classe A della norma CISPR 32.
In ambienti residenziali questa apparecchiatura potrebbe causare interferenze radio.

PRECAUZIONE:

Non togliere il coperchio svitandolo.
Per ridurre i pericoli di scosse elettriche, non togliere il coperchio. All'interno non ci sono parti riparabili dall'utente.
Per le riparazioni, rivolgersi a personale tecnico qualificato.

PRECAUZIONE:

Per assicurare una buona ventilazione, non installare o sistemare questo apparecchio in uno scaffale, mobile incorporato od altro spazio chiuso. Per evitare i pericoli di scosse elettriche o d'incendio a causa di un surriscaldamento, accertarsi che tende od altro materiale non ostacolino la ventilazione.

PRECAUZIONE:

Per ridurre i pericoli d'incendio o di scosse elettriche e di fastidiose interferenze, usare soltanto gli accessori raccomandati.

PRECAUZIONE:

Controllare l'installazione almeno una volta all'anno.
Un'installazione incorretta può risultare nella caduta dell'apparecchio con conseguenti danni alle persone.

PRECAUZIONE:

Non sollevare o spostare l'unità quando è montata sul treppiede.
Il supporto potrebbe rompersi a causa del peso del treppiede e causare infortuni

[ ] sono le informazioni sulla sicurezza

AVVISO EMC PER L'ACQUIRENTE/UTENTE DELL'APPARATO

1. Prerequisiti essenziali per la conformità agli standard sopra menzionati

<1> Periferiche da collegare all'apparato e cavi di collegamento speciali

- Si raccomanda all'acquirente/utente di collegare l'apparato esclusivamente con periferiche da noi approvate.
- Si raccomanda all'acquirente/utente di utilizzare esclusivamente i cavi di collegamento descritti in basso.

<2> Per i cavi di collegamento, utilizzare cavi schermati idonei per l'utilizzo previsto per l'apparato.

- Cavi di collegamento per segnali video
  Utilizzare cavi coassiali con doppia schermatura, progettati per applicazioni in alta frequenza da 75-ohm, per SDI (interfaccia digitale seriale).
  Per i segnali video analogici sono consigliati cavi coassiali, progettati per applicazioni in alta frequenza da 75-ohm.
- Cavi di collegamento per segnali audio
  Se l'apparato dell'utente supporta i segnali audio digitali seriali AES/EBU, utilizzare i cavi progettati per segnali AES/EBU.
  Per i segnali audio analogici, utilizzare cavi schermati che garantiscono prestazioni di qualità per le applicazioni di trasmissione ad alta frequenza.
- Altri cavi di collegamento (IEEE1394, USB)
  Come cavi di collegamento, utilizzare cavi schermati che garantiscono prestazioni di qualità per le applicazioni ad alta frequenza.
- Per la connessione al terminale del segnale DVI utilizzare un cavo dotato di anello in ferrite.
- Se l'apparato dell'utente dispone di anima/e in ferrite, questa deve essere attaccata al cavo o ai cavi come indicato nelle istruzioni che seguono nel presente manuale.

2. Livello di prestazioni

Il livello di prestazioni dell'apparato è equivalente o superiore al livello di prestazioni richiesto da questi standard.
Tuttavia, l'apparato potrebbe essere disturbato da interferenze esterne qualora venga utilizzato in un ambiente EMC, come nel caso di un'area con forti campi elettromagnetici (generati dalla presenza di torri per la trasmissione di segnali, telefoni cellulari, ecc.). In casi simili, al fine di minimizzare il disturbo di tali interferenze sull'apparato, si consiglia di intervenire sull'apparato e sul suo ambiente operativo adottando le misure indicate di seguito:

1. Posizionare l'apparato lontano dalla fonte dell'interferenza.
2. Cambiare la direzione dell'apparato.
3. Cambiare il metodo di collegamento utilizzato per l'apparato.
4. Collegare l'apparato a un'altra presa sul muro che non sia condivisa con altri apparecchi.

Smaltimento di vecchie apparecchiature

Solo per Unione Europea e Nazioni con sistemi di raccolta e smaltimento

Questo simbolo sui prodotti, sull'imballaggio e/o sulle documentazioni o manuali accompagnanti i prodotti indica che i prodotti elettrici, elettronici non devono essere smaltiti come rifiuti urbani ma deve essere effettuata una raccolta separata.

Per un trattamento adeguato, recupero e riciclaggio di vecchi prodotti vi invitiamo a portarli negli appositi punti di raccolta secondo la legislazione vigente nel vostro paese.

Con uno smaltimento corretto, contribuirete a salvare importanti risorse e ad evitare i potenziali effetti negativi sulla salute umana e sull'ambiente. Per ulteriori informazioni su raccolta e riciclaggio, vi invitiamo a contattare il vostro comune, rivenditore o fornitore.

Lo smaltimento non corretto di questi rifiuti potrebbe comportare sanzioni in accordo con la legislazione nazionale

Fabbricato da: Panasonic Corporation
1006 Kadoma, Città di Kadoma, Osaka, Giappone
Importatore: Panasonic Connect Europe GmbH
Hagenauer Strasse 43, 65203 Wiesbaden, Germania
Rappresentante autorizzato nell'UE: Panasonic Connect Europe GmbH
Panasonic Testing Centre
Winsbergring 15, 22525 Amburgo, Germania

■ I simboli su questo prodotto (compresi gli accessori) rappresentano quanto segue. (Alcuni prodotti non sono rappresentati.)

I	ON
⏻	Standby (OFF)
~	CA
⎓	DC
⧈	Apparecchiatura di classe II (il prodotto dispone di doppio isolamento.)

Прочитайте нижеследующее до начала эксплуатации!

РУССКИЙ

ОСТОРОЖНО:

- Для снижения риска возникновения пожара или удара электрическим током не подвергайте данное оборудование воздействию дождя или влаги.
- Для снижения риска возникновения пожара или удара электрическим током держите данное оборудование подальше от любых жидкостей. Используйте и храните его только в местах, где оно не будет подвергаться риску попадания капель или брызг жидкости и не помещайте емкостей с жидкостью на оборудование.

ОСТОРОЖНО:

Всегда храните крепежный винт для основного устройства, крепежные винты для кронштейна и крепежный винт троса для защиты от падения вне доступа младенцев и маленьких детей.

ОСТОРОЖНО:

Это оборудование совместимо с классом A стандарта CISPR 32.
В жилых районах это оборудование может стать причиной радиопомех.

ПРЕДОСТЕРЕЖЕНИЕ:

Не отвинчивайте крышки панелей.
Для снижения риска удара электрическим током не снимайте панели. Внутри устройства нет деталей, подлежащих обслуживанию пользователем.
Обратитесь за сервисным обслуживанием к квалифицированному персоналу.

ПРЕДОСТЕРЕЖЕНИЕ:

Для обеспечения надлежащей вентиляции не устанавливайте и не размещайте данное устройство на книжном стеллаже, во встроенном шкафу или в другом закрытом пространстве. Для предотвращения риска поражения электрическим током или опасности возгорания вследствие перегрева убедитесь, что занавески или другие материалы не препятствуют вентиляции.

ПРЕДОСТЕРЕЖЕНИЕ:

Для снижения риска возникновения пожара или удара электрическим током и возникновения помех используйте только рекомендуемые дополнительные принадлежности.

ПРЕДОСТЕРЕЖЕНИЕ:

Проверяйте установку по крайней мере раз в год.
Ненадлежащая установка может привести к падению устройства и получению травмы.

ПРЕДОСТЕРЕЖЕНИЕ:

Не поднимайте и не передвигайте устройство при подсоединенном штативе.
Приспособление под весом штатива может поломаться, что может привести к травме.

Данный знак обозначает информацию, относящуюся к технике безопасности.

ПРИМЕЧАНИЕ ЕМС ДЛЯ ПОКУПАТЕЛЯ/ПОЛЬЗОВАТЕЛЯ

1. Условия, которые необходимо соблюдать для достижения соответствия указанным стандартам

<1> Периферийное оборудование, которое подключается к устройству, и специальные соединительные кабели

- Настоятельно рекомендуется использовать только то оборудование, которое поставляется как периферийные устройства для подключения к данному аппарату.
- Используйте только соединительные кабели, представленные ниже.

<2> В качестве соединительных кабелей используйте экранированные кабели, которые соответствуют задачам подключения устройства.

- Соединительные кабели для передачи видеосигнала
  Для подключения SDI (Serial Digital Interface) следует использовать двойной экранированный коаксиальный кабель, предназначенный для высокочастотных приложений с сопротивлением 75 Ом, для SDI (Serial Digital Interface).
  Для передачи аналоговых видеосигналов рекомендуется использовать коаксиальный кабель, предназначенный для высокочастотных приложений с сопротивлением 75 Ом.
- Соединительные кабели для передачи аудиосигнала
  Если видеокамера принимает цифровые аудиосигналы AES/EBU, следует использовать кабели, предназначенные специально для AES/EBU.
  Для передачи аналоговых аудиосигналов используйте экранированные кабели, которые обеспечивают высокую производительность при работе с высокочастотными приложениями.
- Другие типы соединительных кабелей (IEEE1394, USB)
  Следует использовать экранированные кабели, которые обеспечивают высокую производительность при работе с высокочастотными приложениями.
- При подключении к DVI signal terminal следует использовать кабель на основе феррита.
- Если камера поставляется с ферритовыми сердечниками, следует подсоединить их к кабелям, как показано в инструкции.

2. Уровень производительности

Уровень производительности данного устройства соответствует требованиям указанных стандартов или превосходит их.

При использовании устройства вблизи оборудования, которое является источником сильного электромагнитного излучения, могут возникать помехи (например, при использовании вблизи устройств передачи сигналов, мобильных телефонов и др.).

Для минимизации подобного воздействия на устройство рекомендуется выполнить следующие действия с устройством и другими источниками электромагнитного излучения:

1. Переместите камеру на достаточно большое расстояние от других устройств.
2. Измените направление расположения камеры.
3. Измените метод подключения камеры.
4. Подключите камеру к другому источнику питания, который не используется никакими устройствами.

■ **Символы на данном изделии (включая дополнительные принадлежности) означают следующее. (Некоторые символы не отображаются на этом устройстве.)**

I	ВКЛ
⏻	Режим ожидания
~	Переменный ток
⎓	Постоянный ток
⧈	Оборудование класса II (Конструкция изделия с двойной изоляцией.)

Characteristics

Overview

This 4K camera features ultra-wide angle 111° lens, and uses a 1/2.5” type MOS sensor and supports wider video output in various formats including 4K / 30p output.

A single cable solution with one Ethernet cable is enabled, and compatibility with remote cameras is enhanced by protocol support such as RTMP. Connecting a controller enables smooth camera operation by IP control. In addition, it is equipped with a USB camera function that can be easily connected and applied to various applications.

Characteristics

Multi-format support You can switch between the following formats via the camera menus or a web browser. [4K format] 2160/29.97p, 2160/30p, 2160/25p [HD format] 1080/59.94p, 1080/60p, 1080/50p, 1080/29.97p, 1080/30p, 1080/25p 720/59.94p, 720/60p, 720/50p **1/2.5” MOS sensor and ultra-wide angle 111° fixed focus lens** With the ultra-wide-angle (111 ° horizontal) lens, you can capture a wider space video, and you can reproduce clear images for a wide range of applications. Storage of up to 100 positions in the preset memory. **Single cable solution** By supporting PoE power supply, we have realized a single cable solution that enables video signal / control signal / power supply with one Ethernet cable **IP image output functions** It supports 4K30p output with RTMP (Real-Time Messaging Protocol), which can upload video directly to live distribution service, and it demonstrates high operability in live production use	**Affinity with remote camera** By supporting PoE power supply and RTMP / RTSP support, the affinity with the remote camera series is further enhanced **USB camera** It is also possible to use USB camera with easy connection one USB cable by USB power supply from PC. **Use of easy-to-operate wireless remote control (optional) is possible** A wireless remote control capable of operating up to four units can be used. It can easily be used to set the various functions or switch between them while viewing the menu screens. **Flexible camera layout enabled by simple connection and installation** IP control, lightweight body and simple up/down and inverse mechanism result in outstanding DIY (indoor applications only) connectivity and installation ease. Remember that this unit is designed to be used indoors only: It cannot be used in outdoor.

Energy-savings achieved by the compact main unit design The main unit is lightweight and compact at less than 0.5kg and low 5W energy consumption means multiple cameras can be connected easily.	**Easy connections and settings courtesy of IP control** Up to two hundred units can be operated by IP connection from a Panasonic controller (AW-RP60). (The maximum length of the LAN cables is 100 meters (328 ft).) Network connection with AW-RP60 requires setup of an initial account. When an initial account is not setup, AW-RP60 can detect but cannot control this unit.

Required Personal Computer Environment

CPU	Intel® Core™ i5 3.2GHz or higher (Skylake 6500 or later)
Memory	4 GB or more
Network function	100BASE-T/TX or 1000BASE-T, RJ-45 connector
Image display	Resolution: 1920 x 1080 pixels or more Color generation: True Color 24-bit or more
Supported operating systems and web browsers	For Windows: Microsoft® Windows® 7,10 Windows® Internet Explorer® 11 64-bit/32-bit Microsoft Edge Google Chrome
	For Mac: macOS 10.14 macOS 10.13 macOS 10.12 OS X 10.11 Safari Google Chrome
Other	Graphics card support hardware acceleration (for decode H.264/H.265/JPEG streaming) Adobe® Reader® (for viewing the operating instructions available on the website)

IMPORTANT
Failure to provide the required personal computer environment may slow down the delineation of the images on the screen, make it impossible for the web browser to work and cause other kinds of problems.

[Note]

- Depending on the software version of the unit, an update may be necessary.
- For the latest information on compatible operating systems, and web browsers, visit the support desk at the following website: https://pro-av.panasonic.net/

Disclaimer of Warranty

IN NO EVENT SHALL Panasonic Corporation BE LIABLE TO ANY PARTY OR ANY PERSON, EXCEPT FOR REPLACEMENT OR REASONABLE MAINTENANCE OF THE PRODUCT, FOR THE CASES, INCLUDING BUT NOT LIMITED TO BELOW:

1) ANY DAMAGE AND LOSS, INCLUDING WITHOUT LIMITATION, DIRECT OR INDIRECT, SPECIAL, CONSEQUENTIAL OR EXEMPLARY, ARISING OUT OF OR RELATING TO THE PRODUCT;
2) PERSONAL INJURY OR ANY DAMAGE CAUSED BY INAPPROPRIATE USE OR NEGLIGENT OPERATION OF THE USER;
3) UNAUTHORIZED DISASSEMBLE, REPAIR OR MODIFICATION OF THE PRODUCT BY THE USER;
4) INCONVENIENCE OR ANY LOSS ARISING WHEN IMAGES ARE NOT DISPLAYED, DUE TO ANY REASON OR CAUSE INCLUDING ANY FAILURE OR PROBLEM OF THE PRODUCT;
5) ANY PROBLEM, CONSEQUENTIAL INCONVENIENCE, OR LOSS OR DAMAGE, ARISING OUT OF THE SYSTEM COMBINED BY THE DEVICES OF THIRD PARTY;
6) ANY DEMANDS FOR COMPENSATION, CLAIMS, ETC. OCCASIONED BY THE INFRINGEMENT OF PRIVACY BY INDIVIDUALS OR ORGANIZATIONS WHOSE IMAGES WERE SHOT BY THE USER BECAUSE THESE IMAGES (INCLUDING THE RECORDINGS MADE) WERE MADE AVAILABLE BY THE USER BECAUSE IN THE PUBLIC DOMAIN FOR SOME REASON OR OTHER OR BECAUSE THE IMAGES ENDED UP BEING USED FOR PURPOSES OTHER THAN THE ONE DESCRIBED ABOVE
7) LOSS OF REGISTERED DATA CAUSED BY ANY FAILURE.

Network security

As you will use this unit connected to a network, your attention is called to the following security risks.

- Leakage or theft of information through this unit
- Use of this unit for illegal operations by persons with malicious intent
- Interference with or stoppage of this unit by persons with malicious intent

It is your responsibility to take precautions such as those described below to protect yourself against the above network security risks.

- Use this unit in a network secured by a firewall, etc.
- If this unit is connected to a network that includes personal computers, make sure that the system is not infected by computer viruses or other malicious entities (using a regularly updated antivirus program, anti-spyware program, etc.).
- Protect your network against unauthorized access by restricting users to those who log in with an authorized user name and password.
- After accessing the unit as an administrator, be sure to close all web browsers.
- Change the administrator password periodically.
- To avoid passwords that can be guessed easily by third parties, set a password of at least 8 characters in length, including at least 3 different types of characters, such as upper case, lower case, numbers, and symbols
- Restrict access to the unit by authenticating the users, for example, to prevent setting information stored on the unit from leaking over the network.
- Do not install the unit in locations where the unit, cables, and other parts can be easily damaged or destroyed by persons with malicious intent.
- Avoid connections that use public lines.

[Note]

Notes on user authentication

User authentication on the unit can performed via digest authentication or basic authentication. If basic authentication is used without the use of a dedicated authentication device, password leaks may occur.

We recommend using digest authentication or host authentication.

Usage restrictions

Use of the same segment is recommended for the network in which the unit and personal computer are connected.

If the equipment uses connections with different segments, events based on the settings inherent to the network equipment, for instance, may occur so check this thoroughly prior to operation.

Accessories

Check the accessories before using this unit. After removing the product from its container, dispose of the packing materials in an appropriate manner.

USB Cable

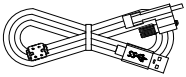

Drop-prevention wire

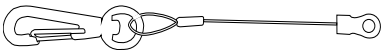

Mount kit

L-mount kit

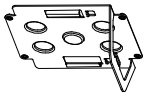

M4 screw
10 mm length (4 screws)

M4 screw
5 mm length (4 screws)

Tripod screw
(1/4"-20UNC, 5.5 mm length)

Optional accessories

- Wireless remote control
  AW-RM50G (Size "AA" dry battery x2, obtained separately)
- Direct ceiling mount bracket WV-Q105A

[Note]
For details on optional accessories, refer to the catalog or consult your local dealer.

Operating Precautions

■ Shoot under the proper lighting conditions.

To produce pictures with eye-pleasing colors, shoot under the proper lighting conditions. The pictures may not appear with their proper colors when shooting under fluorescent lights. Select the proper lighting as required.

■ To ensure a stable performance in the long term

Using the unit for prolonged periods in locations where the temperature and humidity levels are high will cause its parts to deteriorate, resulting in a reduction of its service life. (Recommended temperature: Max. 35 ºC (95 °F))
Ensure that a cooling unit or heating unit will not blow any air directly toward the installation location.

■ Do not point the camera at strong lights.

When parts of the MOS sensor are exposed to spotlights or other strong lights, blooming (a phenomenon where the edges of strong lights become blurred) may occur.

■ What happens with high-brightness subjects

Flare may occur if an extremely bright light source is pointed at the lens. In a case like this, change the angle or take some other remedial action.

■ Concerning the Image distortion.

Due to the characteristics of the lens, the edge of the image is distorted.

■ When using the automatic functions

In the [Scene] such as the camera menu, the initial settings on some items has been set to auto, making it impossible for these items to be operated manually. To operate them manually, switch from the auto settings to the manual settings as required.
When using the ATW (auto tracking white adjustment) function under fluorescent lights, the white balance may vary.

■ Operating temperature range

Avoid using the unit in cold locations where the temperature drops below 0 ºC (32 °F) or hot locations where the temperature rises above 40 ºC (104 °F) since these temperatures downgrade the picture quality and adversely affect the internal parts.
Also, it may take a few minutes to stabilize the image when used in low temperatures. We recommend that you turn on this unit before use.

■ Concerning the HDMI interface standard

This unit has been certified as HDMI-compatible, but on rare occasions images may not be displayed depending on the HDMI device which has been connected to the unit.

■ Color bars

Color bars are used to adjust the color phase, and the widths and positions of these bars may differ from other models.

■ Concerning PoE power supply

The unit complies with the IEEE802.3af standard. Use a compatible Ethernet hub and PoE injector to use a PoE power supply.

■ Turn off the power before connecting or disconnecting the cables.

Always be sure to turn off the power before connecting or disconnecting the cables.

■ H.264/H.265 patent pool licensing

This product is licensed based on the AVC Patent Portfolio License, and the license does not extend beyond uses by users, who engage in the acts described below, for their own personal and non-profit applications.

(i) Recoding of image information in compliance with the AVC standard (hereafter, “AVC videos”)

(ii) Playing of AVC videos recorded by consumers engaging in personal activities or AVC videos acquired from licensed providers

For details, visit MPEG LA, LLC website (http://www.mpegla.com).

■ Handle the unit carefully.

Do not drop the unit or subject it to strong impact or vibration. Doing so may cause the unit to malfunction.

■ Keep the unit away from water

Avoid all direct contact with water. Otherwise, problems may occur.

■ When the unit is not in use

Turn off the unit’s power when it is not in use. When the unit is no longer going to be used, do not leave it lying around, but be absolutely sure to dispose of it properly.

■ Do not touch the optical system.

Under no circumstances must they be touched. In the unlikely event that they have become dusty, remove the dust by using a camera blower or by wiping them gently with a lens cleaning paper.

■ Do not point the camera directly at the sun or a laser beam.

Taking images of the sun, laser beams, or other brightly lit subjects for prolonged periods of time may damage the MOS sensor.

■ Personal computer used

If the same image is displayed for a prolonged period on a PC monitor, the monitor may be damaged. Use of a screen saver is recommended.

■ Concerning the IP address setting

Do not run the Easy IP Setup Software on a multiple number of personal computers for a single camera and set the IP address at the same time.

Otherwise, you will be unable to complete the proper procedure and set the IP address correctly.

■ Disposal of the unit

When the unit has reached the end of its service life and is to be disposed of, asks a qualified contractor to dispose of the unit properly in order to protect the environment.

■ Maintenance

Turn off the unit's power before proceeding with maintenance. Otherwise, you may injure yourself. Wipe the surfaces using a soft dry cloth. Avoid all contact with benzene, paint thinners and other volatile substances, and avoid using these substances. Otherwise, the casing may become discolored.

■ Use the unit in an environment with minimal moisture and dust.

Avoid using the unit in an environment with high concentration of moisture or dust since these conditions will damage the internal parts.

■ Information on software used with this product

This product incorporates the following software:

(1) the software developed independently by or for Panasonic Holdings Corporation,

(2) the software owned by third party and licensed to Panasonic Holdings Corporation,

(3) the software licensed under the GNU General Public License, Version 2.0 (GPL V2.0),

(4) the software licensed under the GNU LESSER General Public License, Version 2.1 (LGPL V2.1), and/or

(5) open source software other than the software licensed under the GPL V2.0 and/or LGPL V2.1.

The software categorized as (3) - (5) are distributed in the hope that it will be useful, but WITHOUT ANY WARRANTY, without even the implied warranty of MERCHANTABILITY or FITNESS FOR A PARTICULAR PURPOSE. Please refer to the detailed terms and conditions that can be downloaded from the web screen

At least three (3) years from delivery of this product, Panasonic will give to any third party who contacts us at the contact information provided below, for a charge no more than our cost of physically performing source code distribution, a complete machine-readable copy of the corresponding source code covered under GPL V2.0, LGPL V2.1 or the other licenses with the obligation to do so, as well as the respective copyright notice thereof.

https://pro-av.panasonic.net

However, do not contact Panasonic for questions regarding obtained source codes.

Parts and Functions

Camera Unit

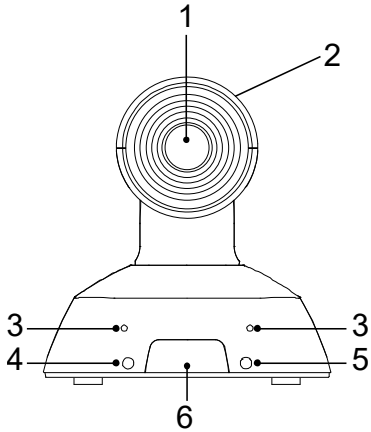

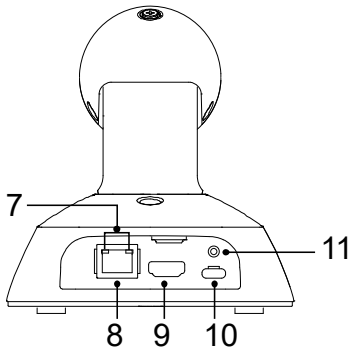

1. **Lens**
2. **Camera head**
3. **Internal microphone**
4. **Power status indicator**
   - Orange light: Standby mode
   - Green light: The unit is turned on
   - Flashing green light: The unit is receiving a wireless remote control signal with a matching remote control ID
   - Flashing(1Hz) orange light: The unit is receiving a wireless remote control signal with a different remote control ID
   - High speed (5Hz) flashing orange light: When a signal from the wireless remote control is received while the wireless control is set to “Disable” from the web screen menu.
   - Flash red light: Firmware updating
   - Red light: Firmware update failure or other abnormal.
5. **Tally status indicator**
6. **Wireless remote control signal light-sensing area**
7. **LAN indicator(LINK/ACT)**
   Lights up when data is transmitted/received via LAN.
8. **LAN connector**
   Use a category 5e or above LAN cable with a maximum length of 100 m (328 ft.)
9. **HDMI terminal**
10. **USB terminal** [ ]
    Power can be supplied from any device that complies with USB battery charging standards.
    Always use a USB cable is included in accessories.
11. **Screw hole for USB cable**

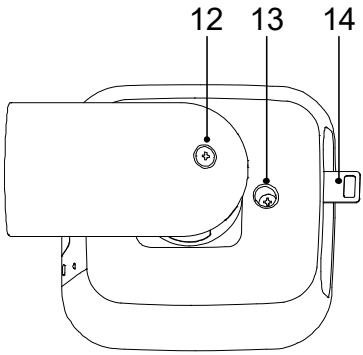

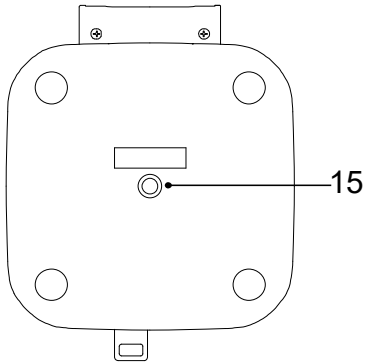

12. **Perpendicular fixing screw**
13. **Horizontal fixing screw**
14. **Drop-prevention wire mounting portion**
15. **Mount hole**
    [Screw: I-head type, 1/4 x 20 UNC
    Clamping torque: 1.47N · m(15kgf · cm)]

Tilting the Camera Up and Down

When the perpendicular fixing screw (A) is loosened, the camera can be tilted approximately 25°up or down.

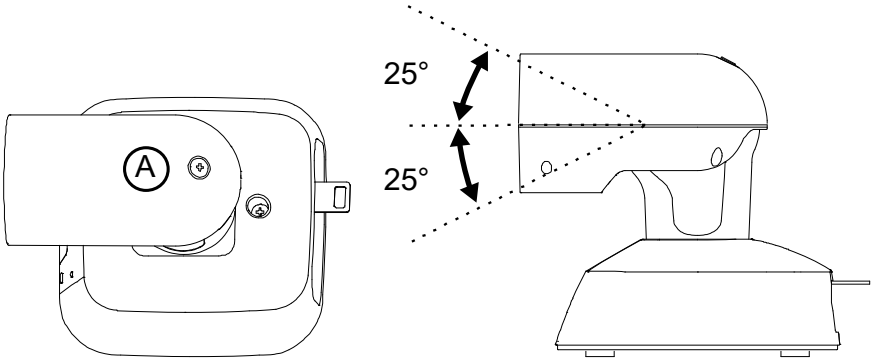

After adjusting the position of the camera, firmly tighten the screw to fix the camera in position.

Panning the Camera Right and Left

When the horizontal fixing screw (B) is loosened, the camera can be pan 110° in the horizontal right or left.

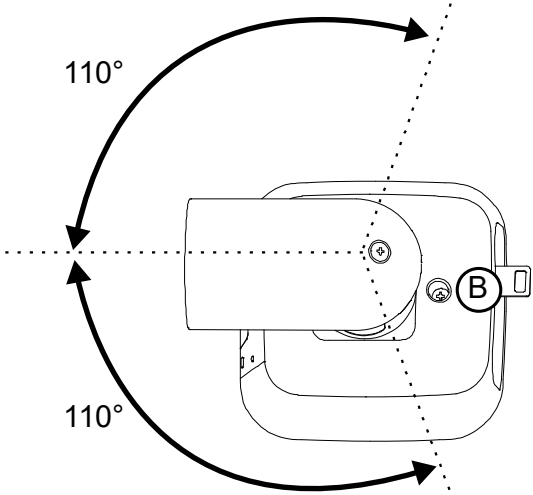

After adjusting the position of the camera, firmly tighten the screw to fix the camera in position.

Wireless Remote Control

You can operate the unit with the optional wireless remote control (AW-RM50G).

Consult your dealer concerning the purchase of a wireless remote control.

Buttons used for operating this unit are described.

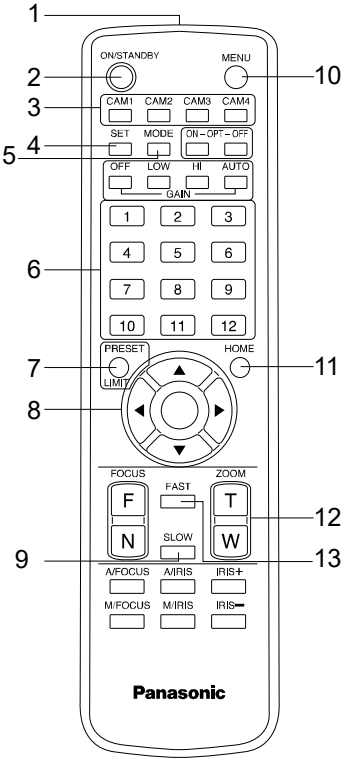

1	Signal transmission window
2	**ON/STANDBY button** Each time this is pressed for 2 seconds, operation switches between turning on the unit‘s power and establishing the standby status.
3	**CAM1 to CAM4 buttons** Selects a camera to be operated. Once a button has been selected, the unit corresponding to the selected button can be operated.
4	**SET button** If this button is pressed when the [AWB A] memory or [AWB B] memory has been selected for the white balance adjustment, the white balance is automatically adjusted and registered in the selected memory.
5	**MODE button** Each time you press the button, the signal switches between the color bar signal output and the camera image output.
6	**1 to 12 buttons** These are used to call the information on the unit’s directions and other settings, which have been registered in the units preset memories No.1 to No.12, and reproduce those settings. Setting in preset memories No.13 and above cannot be called from the wireless remote control
7	**PRESET button** Press this button and any of the buttons from 1 to 12 simultaneously to register a preset memory.

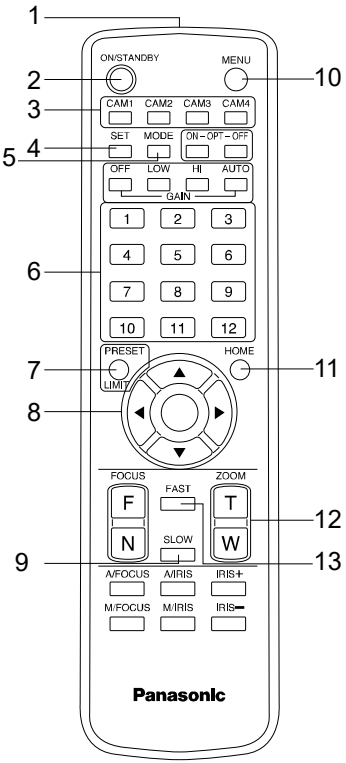

8	**Pan-tilt buttons and menu operation buttons** (1)These are used to change the unit's direction. The unit is tilted in the up/down direction using the [▲] and [▼] buttons and panned in the left/right direction using the [◀] and [▶] buttons. The [○] button does not work during tilting and panning. When the [▲] or [▼] and [◀] or [▶] buttons are pressed at the same time, the unit moves diagonally. (2) The buttons are used for menu operations when the unit displays the camera menus. Use the [▲] and [▼] buttons to select the menu items. When a selected item has a sub-menu, the sub-menu will be displayed by pressing the [○] or [▶] button. When the [○] or [▶] button is pressed on the setting menu at the bottom hierarchical level, the new setting is entered.
9	**SLOW button** Changes the pan/tilt or zoom speed to low speed.
10	**MENU button** Press and hold for 2 seconds to display the camera menu of the unit.
11	**HOME button** **If you press and hold the button for 2 seconds, the zoom level of the unit is changed to x1.**
12	**ZOOM button** These are used to adjust the digital zoom. The zoom is adjusted in the wide-angle using the [W] button and in the telephoto using the [T] button
13	**FAST button** Changes the pan/tilt or zoom speed to high speed.

Wireless Remote Control (optional accessory)

This unit can be operated by remote control using a wireless remote control (model number: AW-RM50G) purchased separately. Check out the following points before using the wireless remote control.

- **Point the wireless remote control at the unit's wireless remote control signal light-sensing area (front side), and operate it within a range of 10 meters (32.8 ft.) from the area.**
- **Refer to <Layout of wireless remote control signal light-sensing areas> on the below.**
- **The signal sensing distance is reduced if the angle at which the wireless remote control signals are sensed is increased.**
  The light-sensing sensitivity is reduced to about one-half when the wireless remote control is pointed at an angle of 40 degrees from each position in front of a wireless remote control signal light-sensing area (front panel or back panel).
  If the remote control is operated from the behind the unit, it may be either difficult or impossible to perform the desired operations.
- **If the unit is installed near fluorescent lights, plasma monitors or other such products or if the unit is exposed to sunlight, the effects of the light may make it impossible for the unit to be operated using the wireless remote control.**
  Be sure to follow the steps below for installation and use.
  - ✓ Take steps to ensure that the wireless remote control signal light- sensing area will not be exposed to the light from fluorescent lights, plasma monitors or other such products or from the sun.
  - ✓ Install the unit away from fluorescent lights, plasma monitors and other such products.
- **For about 10 minutes even after the batteries have been removed from the wireless remote control, the selection of the operation to be performed (the <CAM1>, <CAM2>, <CAM3> or <CAM4> button which was pressed last) will remain stored in the memory.**
  When a longer period of time elapses, however, the selection is reset to the status established when the <CAM1> button was pressed.
- **The unit's status indicator LED blinks green when a signal matched by the wireless remote control ID has been received, and it blinks orange when a signal that is not matched by the wireless remote control ID has been received.**
- **When the wireless control in the web screen menu is set to "Off", you cannot operate with the wireless remote control. The power status indicator flashes orange rapidly (5Hz).**
  When operating with the wireless remote control, set the wireless control in the web screen menu to "On".

<Layout of wireless remote control signal light-sensing areas>

[Note]The arrows in the figure below show the light-sensing directions in which the wireless remote control signals travel.

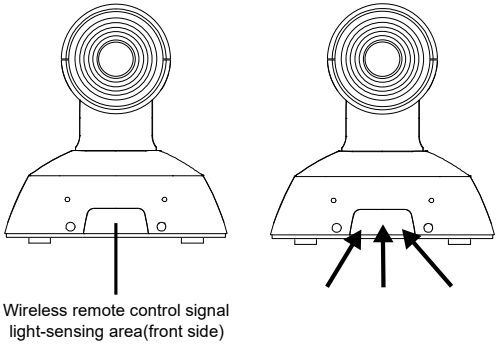

Network Settings

Use the Easy IP Setup Software to Establish the Unit's Settings

The settings related to the unit's network can be established using the Easy IP Setup Software supplied. You can obtain Easy IP Setup Software (EasyIPSetup.exe) by downloading it from the following website:
https://pro-av.panasonic.net/

- To establish the settings for a multiple number of units, the settings must be selected for each camera involved.
- If the settings cannot be established using the Easy IP Setup Software, select the settings separately for the unit and personal computer on the Network setup screen [Network] of the setting menu. (Operating Instructions (PDF) → "Web Screen configuration" → "Network Settings [Network]")

[Note]

- If, after the network settings have been established, another device in the same network has the same IP address, the network operations will not be performed properly.
- Set the IP address in such a way that it does not duplicate an existing IP address.
- Do not establish network settings from a multiple number of Easy IP Setup Software programs at the same time for a single camera. Similarly, do not perform the "Auto IP setting" operation of the AW-RP60 remote camera controller at the same time. The IP address settings may no longer be recognized as a result.
- To enhance the security of the Easy IP Setup Software, it will not be possible to make network settings for the target camera once about 20 minutes or more have elapsed after turning the power of the camera on. (When the [Easy IP Setup accommodate period] setting is [20min].
- The Easy IP Setup Software cannot be used from a different subnet via a router.
- Use Easy IP Setup Software ver. 4.25R00 or newer.

1 Double-click EasyIPSetup.exe to start the Easy IP Setup Software.

2 Click the [Search] button.

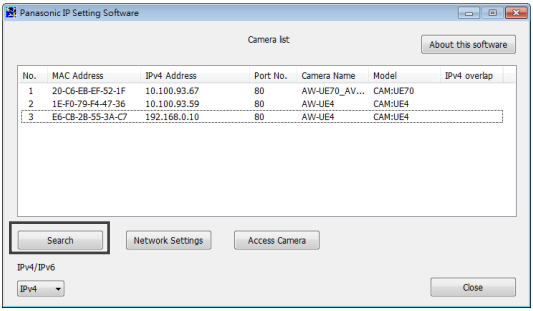

3 Click the MAC address/IPv4 address of the camera to be set, and click the [Network settings] button.

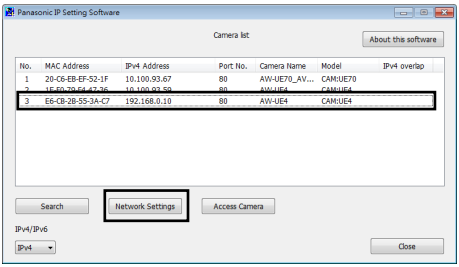

- When a DHCP server is being used, the IP address allocated to the unit can be checked by clicking the [Search] button of the Easy IP Setup Software.
- If IP addresses have been duplicated, the duplicated camera No. is displayed in the [IPv4 overlap] column of the relevant camera.
- Clicking [Access Camera] displays a Live screen of the selected camera.
- The IPv4/IPv6 switching function cannot be used with this camera (only compatible with IPv4).

4 Input the network items, and click the [Save] button.

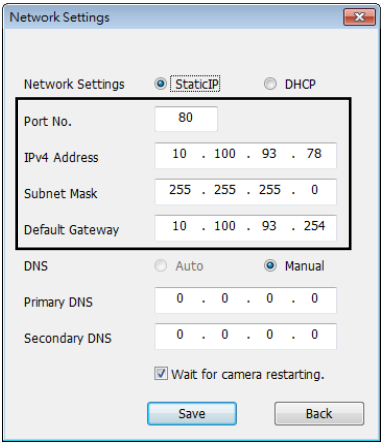

- When a DHCP server is being used, [DNS] of the Easy IP Setup Software can be set to [Auto].
- After the [Save] button is clicked, it takes about 2 minutes for the settings in the unit to be completed.
- If the USB cable or LAN cable is disconnected before the settings are completed, the settings will be canceled. In this case, repeat the steps to establish the settings.
- When a firewall (including software) has been introduced, enable access to all the UDP ports.

Setting the Initial Account

1 Set the initial account.

In the initial state, the initial account setting screen is displayed when the web screen is displayed.
Set a user name and password.

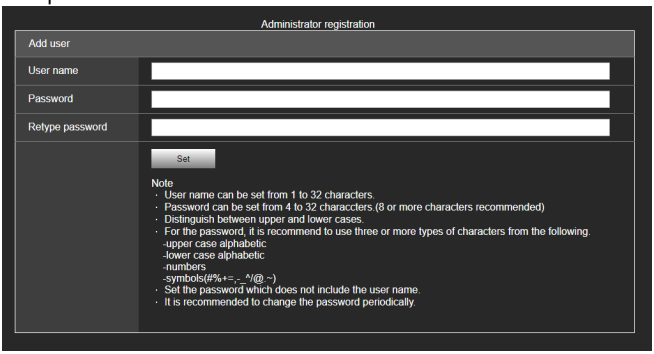

[Note]

- The usable symbols for user name is following (# % + = , - _ ^ / @ . ~)
- Do not set character strings that can be easily guessed by third parties.
- Change the password at regular intervals.
- The password must use at least 3 of the following 4 character types and be 8 characters or longer.
  Alphabet upper cases
  Alphabet lower cases
  Numerals
  Symbols (# % + = , - _ ^ / @ . ~)
- When a password is set that does not adhere to the above policy, take responsibility for use of the device with due consideration for the security risks in the installation environment, etc.
- A warning is displayed if the set password goes against the recommended setting policy. When changing the password, click the [Back] button and set the password again.
- When continuing with the setting with full understanding of the security risks, click [Continue] to complete the setting.

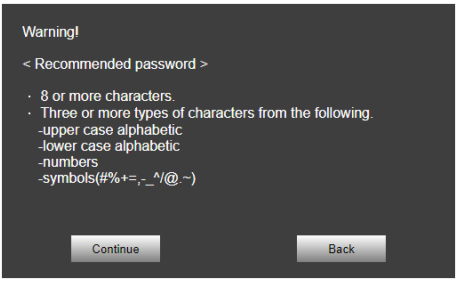

2 Completing registration of the initial account

After completing registration of the initial account, the live screen [Live] is automatically displayed after a few seconds.
This completes the process of registering the initial account.

Starting the Web Setting Screen

If you connect the unit with a PC, you can operate the unit and configure the unit's settings from the web setting screen.
For details of the required personal computer environment → p44.

Starting the Web Setting Screen (Live Screen/Setup Screen)

Connect the unit with a PC.
Perform the settings for the PC:

- Select an IP address for the personal computer within the private address range while ensuring that it is different from the address of the unit.
- Set the subnet mask for the personal computer to the same address as the unit.

- If you need to change the IP address and subnet mask, be sure to ask your dealer to make these changes for you.
- The IP address and subnet mask of the unit (factory defaults)*
  - IP address : 192.168.0.10
  - Subnet mask : 255.255.255.0

* The factory default for the private address range is between 192.168.0.0 and 192.168.0.255.

1 Start the web browser and enter [http://the IP address for the unit/] into the address bar.

- If the IP address of the unit has been changed from the [192.168.0.10] set at the time of purchase, enter the new IP address.
- If the HTTP port number has been changed from the [80] set at the time of purchase, enter [http://the IP address for the unit: The port number/].

- The web setting screen (Live screen) starts up.

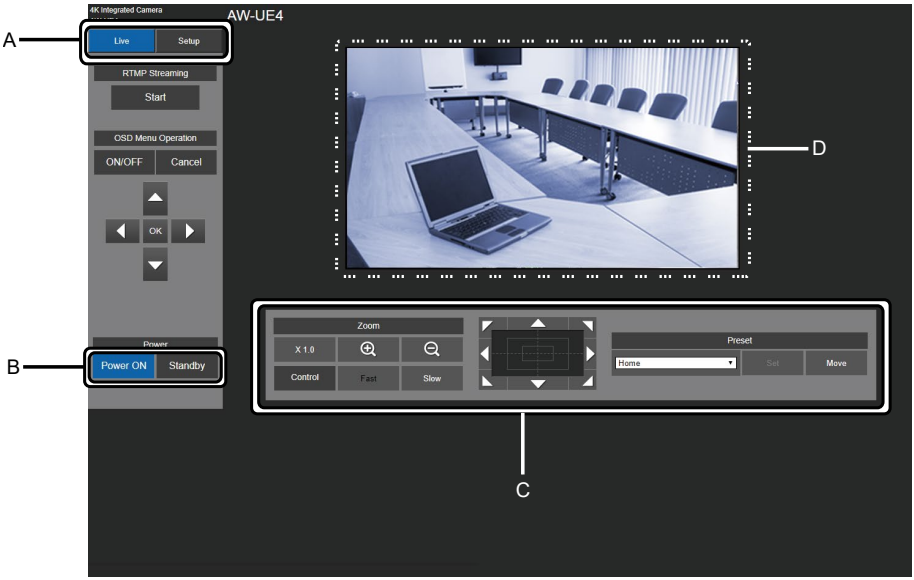

A. Switch between the live screen and the Setup screen.
B. Switch the unit from on to standby mode or vice versa.
C. Operate the camera.
D. The camera image is displayed.

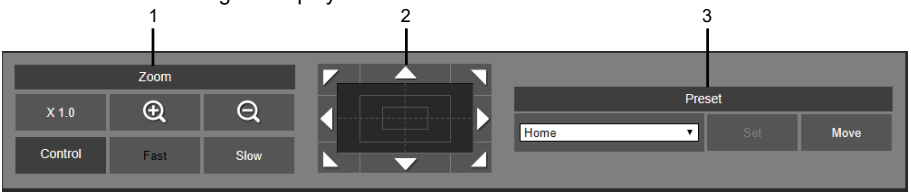

1. Zoom operations
2. Pan/tilt operation
3. Preset memory registration/retrieval

For details regarding camera operations, refer to the “Operating Instructions <Operating the Camera unit>”.

2 Click [Setup] on the live screen.

The user identification screen is displayed.

3 Correctly enter the user name and password that has already been registered,and click [OK].

The Setup screen is displayed.

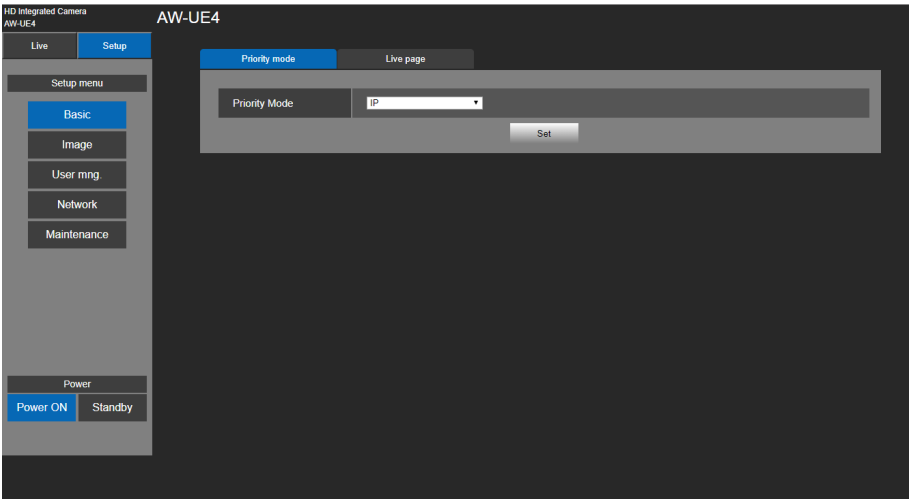

For details regarding the Setup screen, refer to the “Operating Instructions <Camera Menu Operation>”.

- The camera cannot be operated in standby mode.
- For security protection, change the user name and password on the User mng. screen.
- If the wireless remote control and web browser are being used at the same time, the content selected using the wireless remote control may not be reflected on the web setting screen.
- When using both the wireless remote control and web browser, be absolutely sure to check the settings using the wireless remote control or camera menu.

Power on and Power Off the Camera Unit

Power on the Camera Unit

When performing the operations using the wireless remote control.

Set all the power switches of the units and devices connected in the system to ON.
When the power is supplied, the status display lamp lights orange and it takes about 30 seconds to complete the initial setting. After the initial setting is completed, it switches to green and the power turns on.

[Note]

- It takes about 30 seconds per unit for the initial settings operation to be completed. During this period, the unit cannot be operated.
- The unit stores its STANDBY / POWER ON mode status in the memory.
- If the power supply is cut off while the operation is in POWER ON mode, the operation will transfer to the POWER ON mode the next time power is supplied.
- When transferring to the STANDBY mode
  - Status indicator LED: Orange
  - The pan/tilt position is stored in the memory, and the pan/tilt unit is moved so that it points backwards.
- When transferring to the POWER ON mode
  - Status indicator LED: Green (after the initial setting operation is completed))
  - The pan/tilt unit is moved to the position which was stored in the memory when the transition to the STANDBY mode was made.
- POWER ON preset
  - The pan/tilt unit is moved to the setting, which was established immediately prior to the transition to the STANDBY mode, when the power has been turned on.
- If the power is turned off without transferring to the STANDBY mode, the pan/tilt unit position will not be stored in the memory or reflected in the POWER ON preset. The previous POWER ON preset will be applied.

When performing the operations using the controller (AW-RP60).
For details, refer to the operating instructions for the controller.

Power off the Camera Unit

When performing the operations using the wireless remote control

1. **Press one of the [CAM1] to [CAM4] buttons on the wireless remote control to select the unit.**

2. **Press the [ON/STANDBY] button on the wireless remote control for 2 seconds.**
   The unit enters STANDBY mode.

3. **The unit's status display lamp now lights up orange.**

4. **If a multiple number of units are used, repeat steps 1 and 2 as required.**

5. **Set all the power switches of the units and devices connected in the system to OFF.**

When performing the operations using the controller (AW-RP60).

For details, refer to the operating instructions for the controller.

Troubleshooting

Symptom	Cause and solution
No power	**Is the network cable for the PoE (IEEE802.3af) compatible power supply device and the unit connected properly?**
	Power may not be supplied if the total power limit is exceeded on power supply devices that allow connections to multiple PoE terminals.
	If the unit is connected to the controller, has it been connected properly? → For details, refer to the operating instructions for the controller.
Cannot operate (common to wireless remote control, controller)	**Is the power on?** → If the unit's status display lamp is off or lights up orange, it means that the unit's power is not on.
	Has the unit you want to operate been selected properly?
Cannot operate using the wireless remote control	**Have the remote control's batteries run down or have the batteries been installed with their polarities reversed?** → If the status display lamp does not blink even when the wireless remote control is operated near the wireless remote control signal light-sensing area, it means that the batteries have run down. Replace the batteries.
	Is the correct Remote Control ID selected in the menu settings?
	Is there a fluorescent light or plasma monitor near the unit and, if so, is the wireless remote control signal light-sensing area exposed to its light?
	Is the wireless control on the web screen menu not set to "Off"? → If the power status indicator flashes orange rapidly (5Hz) when operated with the wireless remote control, the wireless control in the Web screen menu is set to "Off".
Cannot operate using the controller	**Is the unit connected to the controller properly?** → For details, refer to the operating instructions for the controller.
	It may be necessary to upgrade the version of the controller so that the controller will support the unit. → For details on upgrading, visit the support page on the following website. https://pro-av.panasonic.net/

Symptom	Cause and solution
Cannot operate using the controller	**If the initial account has not been set for the AW-UE4, the unit cannot be controlled from the AW-RP60.** **Please access this machine from a web browser and set up an account.**
	If the user authentication function of AW-UE4 is enabled, please make sure that the correct user name and password are set on the controller.
The unit turns in the opposite direction to the one operated	**Has the Install Position setting been selected correctly?**
	The reversal setting may have been established at the controller if the unit is connected to the controller. → For details, refer to the operating instructions for the controller.
Cannot access from a web browser	**Has a LAN cable of category 5e or above been connected to the LAN connector for IP control <LAN LINK/ACT>?**
	Is the [LINK] LED of the LAN connector for IP control lit? → If it is not lit, it means that something is wrong with the connection to the LAN or that the network at the connection destination is not working properly. Check the LAN cable for defective contacts, and check the wiring.
	Is the power on? → If the unit's status display lamp is off or lights up orange, it means that the unit's power is not on.
	Has a valid IP address been set in the unit?
	Is the same IP address setting being used by another unit? → Check out the IP addresses of the unit, access devices (personal computer, etc.) and any other cameras.
	Does the subnet mask setting match the network subnet of the connection destination? → Check out the subnet mask settings of the unit and access devices, and then consult with the network administrator.
	Has the "Use a proxy server" setting been selected by the web browser? (When the unit and the personal computer are connected to the same subnet) → If a proxy server has been set using the [proxy setting] of the web browser, it is recommended that a "Don't use proxy" address be selected as the unit's IP address setting.

Symptom	Cause and solution
Cannot access from a web browser	**Has the wrong IP address been accessed?** → Check the connections by following the steps below. **For Windows:** Using the Windows command prompt, execute > ping [IP address which has been set in the camera] A reply returned from the unit signifies that there are no problems in operation. If a reply is not received, try following operation: Reboot the unit, and within 20 minutes change the IP address using the Easy IP Setup Software. **For Mac:** Using the OS X terminal, execute > ping -c 10 [IP address which has been set in the camera] A reply returned from the unit signifies that there are no problems in operation. If a reply is not received, try following operation: Reboot the unit, and within 20 minutes change the IP address using the Easy IP Setup Software.
	Has the wrong default gateway been set for the unit? (When the unit and personal computer are connected to different subnets**)** → Check out the default gateway that has been set for the unit, and then consult with the network administrator.

Specifications

Power requirements:

DC ⎓ 5V (4.75V-5.25V)

DC ⎓ 37V to 57V (PoE power supply)

Current consumption:

1.0A (USB terminal power supply)

0.2A (PoE power supply)

The symbols on this product (including the accessories) represent the following:

⎓	DC

Indicates safety information.

■ **GENERAL**

- **Ambient operating temperature:** 0°C to 40°C (32°F to 104°F)
- **Storage temperature:** –20 °C to +50 °C (–4 °F to +122 °F)
- **Allowable humidity ranges:** 20 % to 90 % (no condensation)
- **Dimensions (W x H x D):** 123mm x 131mm x 139mm
  (4-53/64 inches x 5-5/32 inches x 5-29/64 inches)
  (Excluding protrusions, ceiling mount bracket)
- **Mass (Weight) :** Approx. 0.5kg (1.1lb)
  (Excluding ceiling mount bracket)

Index

A

Accessories 48

C

Ceiling Mount 14
Characteristics 43
Connecting cables 19
Connecting with HDMI Monitor 20
Current consumption 70

D

Dimensions 70
Drop-prevention wire 48
Drop-prevention wire mounting portion 53

E

Easy IP Setup Software 12, 50, 59, 60, 69

H

HDMI terminal 52
Horizontal fixing screw 53
Humidity ranges 70

I

Installation location 13
Internal microphone 52
Intial account 61
IP control 21, 43, 68
IP image output functions 43
IP image transmission 22

L

LAN connector 22, 52, 68
LAN indicator 52
Lens 52
Live screen 60, 63

M

Max Weight 70
Mount hole 53

N

Network settings 12, 59, 60

O

Operating temperature 49
Optional accessories 48

P

Panning 54
Perpendicular fixing screw 53
PoE 12, 21, 22, 43, 50, 67, 70
PoE power supply 43, 50, 70
Power off 66
Power on 65
Power requirement 70
Power source 14
Power status indicator 52

R

Remote control ID 52

S

Specifications 70
Stand-alone installation 18
Storage temperature 70

T

Tally status indicator 52
Tilting 53
Tripod 13, 48
Tripod screw 48

U

USB cable 20, 43, 52, 60
USB connection 23
USB terminal 52, 70

W

Web setting screen 62
When using the WV-Q105A 17
Wireless remote control 48

Panasonic Corporation
Web Site: https://pro-av.panasonic.net/en/

© Panasonic Corporation 2019-2026