Panasonic

Operating Instructions

Excerpted Version

Installation Instructions provided

4K Integrated Camera

Model No. **AW-UE100WPC**

Model No. **AW-UE100KPC**

Model No. **AW-UE100WE**

Model No. **AW-UE100KE**

Model No. **AW-UE100WED**

Model No. **AW-UE100KED**

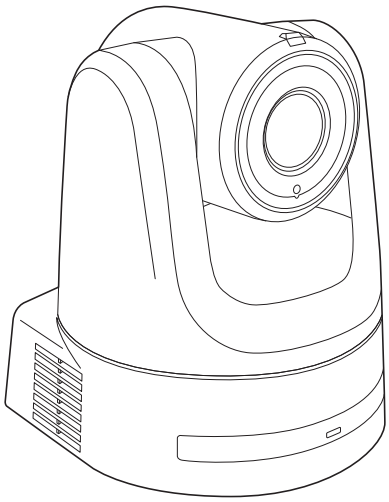

HEVC Advance™
Covered by patents at patentlist.accessadvance.com

HDMI™

ENGLISH Excerpted Version	Before installing and using this product, be sure to read “Read this first!” (pages 4, 26 to 30). This manual contains information excerpted from the Operating Instructions. For more information, please visit the Panasonic website **(https://pro-av.panasonic.net/manual/en/index.html)**, and refer to the Operating Instructions.
FRANÇAIS	Avant d’installer et d’utiliser cet appareil, s’assurer de lire la section « Lire ces informations en premier ! » (pages 4, 31 à 33). Pour de plus amples informations, visiter le site Web de Panasonic **(https://pro-av.panasonic.net/manual/en/index.html)** et consulter le mode d’emploi et les instructions d’installation.
ESPAÑOL	Antes de instalar y usar este producto, asegúrese de leer “Lea esto primero!” (páginas 4, 34 a 36). Si desea obtener más información, visite el sitio web de Panasonic **(https://pro-av.panasonic.net/manual/en/index.html)** y consulte las instrucciones de funcionamiento y las instrucciones de instalación.
DEUTSCH	Bitte lesen Sie sorgfältig „Bitte lesen Sie zuerst diesen Hinweis!“ vor der Installation und Nutzung dieses Produkts. (Seiten 5, 37 bis 38). Weitere Informationen finden Sie auf der Panasonic-Webseite **(https://pro-av.panasonic.net/manual/en/index.html)**, in der Bedienungsanleitung und in der Installationsanleitung.
ITALIANO	Prima di installare e utilizzare il prodotto, assicurarsi di leggere “Leggere prima quanto segue!” (pagine 5, 39 a 40). Per maggiori informazioni, visitare il sito Web Panasonic **(https://pro-av.panasonic.net/manual/en/index.html)** e fare riferimento alle istruzioni per l’uso e alle istruzioni per l’installazione.
РУССКИЙ	Перед установкой и использованием данного изделия ознакомьтесь с информацией в разделе «Прочитайте нижеследующее до начала эксплуатации!» (стр. 5, 41 до 42). Для получения дополнительной информации посетите веб-сайт Panasonic **(https://pro-av.panasonic.net/manual/en/index.html)** и обратитесь к инструкции по эксплуатации и инструкции по установке.

Before operating this product, please read the instructions carefully and save this manual for future use.

PC EJ ED

CG0620RA2024 -FJ
Printed in China

ENGLISH

DVQX2120XA

български	Посетете следния уебсайт относно информация за безопасността и важни уведомления за продукта.
Hrvatski	Za sigurnosne informacije i važne obavijesti o proizvodu posjetite sljedeću internetsku stranicu.
Čeština	Na následujícím webu najdete bezpečnostní informace a důležité poznámky k tomuto produktu.
Dansk	Besøg følgende webside for sikkerhedsinformation og vigtige bemærkninger vedrørende produktet.
Nederlands	Ga naar de volgende website voor veiligheidsinformatie en belangrijke meldingen over het product.
Eesti	Toodet puudutava ohutusteabe ja oluliste märkuste saamiseks külastage järgmist veebilehte.
Suomi	Käy seuraavalla verkkosivulla saadaksesi turvallisuustietoja ja tärkeitä tietoja liittyen laitteeseen.
Ελληνικά	Για πληροφορίες σχετικά με θέματα ασφάλειας και σημαντικές ειδοποιήσεις που αφορούν το προϊόν σας, επισκεφτείτε τον ιστότοπο που ακολουθεί.
Magyar	A termékkel kapcsolatos biztonsági információkért és fontos értesítésekért látogasson el az alábbi weboldalra.
Latviešu	Lai iegūtu informāciju par drošību un skatītu svarīgus paziņojumus par šo produktu, apmeklējiet tālāk norādīto tīmekļa vietni.
Lietuvių	Jei reikia saugos informacijos ir svarbių pranešimų apie gaminį, apsilankykite toliau nurodytoje svetainėje.
Polski	Informacje o bezpieczeństwie i ważne informacje o produkcie znajdują się w poniższej witrynie internetowej.
Português	Consulte o seguinte website para as informações de segurança e importantes notificações sobre o produto.
Română	Vizitați următoarea pagină web pentru informații de securitate și notificări importante cu privire la produs.
Slovensky	Pre bezpečnostné informácie a dôležité oznámenia súvisiace s produktom navštívte túto webovú stránku.
Slovenščina	Za varnostne informacije in pomembna obvestila v zvezi z izdelkom obiščite naslednje spletno mesto.
Svenska	Besök följande webbplats för säkerhetsinformation och viktiga meddelanden om produkten.
العربية	زر موقع الويب التالي لمعرفة أحدث معلومات السلامة والإخطارات الهامة بشأن المنتج.

https://pro-av.panasonic.net/manual/en/index.html

Trademarks and registered trademarks

- Microsoft®, Windows®, Windows® 10, Microsoft Edge, Internet Explorer®, ActiveX® and DirectX® are either registered trademarks or trademarks of Microsoft Corporation in the United States and other countries.
- Apple, Mac, macOS, iPadOS, iPhone, iPad, and Safari are registered trademarks of Apple Inc., in the United States and other countries.
- Android™ and Chrome™ browser are trademarks of Google LLC.
- Intel® and Intel® Core™ are trademarks or registered trademarks of Intel Corporation in the United States and other countries.
- Adobe® and Reader® are either registered trademarks or trademarks of Adobe Systems Incorporated in the United States and/or other countries.
- The terms HDMI and HDMI High-Definition Multimedia Interface, and the HDMI Logo are trademarks or registered trademarks of HDMI Licensing Administrator, Inc. in the United States and other countries.
- NDI is a registered trademark of NewTek, Inc. in the United States.
- Other names of companies and products contained in these Operating Instructions may be trademarks or registered trademarks of their respective owners.

About copyright and licence

It is expressly prohibited to distribute, copy, disassemble, reverse compile, modify, reverse engineer, or export in violation of export laws the software provided with the unit.

Abbreviations

The following abbreviations are used in this manual.

- Windows® Internet Explorer® 11 32/64-bit is abbreviated to “Internet Explorer”.

For the purposes of this manual, the model numbers of the units are given as listed in the table below.

Model number of unit	Model number given in manual
AW-UE100WPC, AW-UE100KPC, AW-UE100WE, AW-UE100KE, AW-UE100WED, AW-UE100KED	**AW-UE100**
AW-RP150G	**AW-RP150**
AW-RP60G	**AW-RP60**
AV-HLC100P, AV-HLC100E	**AV-HLC100**
AV-UHS500P, AV-UHS500E	**AV-UHS500**

Illustrations and screen displays featured in the manual

- What is shown in the manual’s illustrations and screen displays may differ from how it is actually appears.
- Functions which can be used by Windows Internet Explorer 11 only are indicated using the Windows I.E.11 mark.
- The screenshots are used in accordance with the guidelines of Microsoft Corporation.

Contents

Installation Instructions

Read this first! 4
Lire ces informations en premier ! 4
Lea esto primero! 4
Bitte lesen Sie zuerst diesen Hinweis! 5
Leggere prima quanto segue! 5
Прочитайте нижеследующее до начала эксплуатации! 5
Installation precautions 6
Before installation 8
IR ID switch settings 8
Service switch settings 8
How to install and connect the unit 9
When using the WV-Q105A (optional accessory) 14
Removing the camera 15
Stand-alone installation (when the mount bracket is going to be used) 16
Stand-alone installation (when the mount bracket is not going to be used) 19
When installing the unit on a desktop 19
When mounting the unit on a tripod 19
Connections 20
Connecting an NDI|HX compatible switcher 20
Connections with a controller (AW-RP150) 21
System example 1 (Serial control) 22
System example 2 (IP control) 23
System example 3 (IP image transmission, PoE++) 24
System example 4 (NDI) 24
Appearance 25

Operating Instructions

Read this first! (For AW-UE100WPC, AW-UE100KPC) 26
Read this first! (For AW-UE100WE, AW-UE100KE, AW-UE100WED, AW-UE100KED) 28
Read this first! (For AW-UE100WE, AW-UE100KE) 29
Lire ces informations en premier ! (Pour AW-UE100WPC, AW-UE100KPC) 31
Lire ces informations en premier ! (Pour AW-UE100WE, AW-UE100KE) 32
Lea esto primero! (Para AW-UE100WPC, AW-UE100KPC) 34
Lea esto primero! (Para AW-UE100WE, AW-UE100KE) 35
Bitte lesen Sie zuerst diesen Hinweis! (Für AW-UE100WE, AW-UE100KE) 37
Leggere prima quanto segue! (Per AW-UE100WE, AW-UE100KE) 39
Прочитайте нижеследующее до начала эксплуатации! (Для AW-UE100WE, AW-UE100KE) 41
Read this first! 43
Note on grounding 43
Before use 43
Overview 43
Computer requirements 43
Disclaimer of warranty 44
Network security 44
Features 45
Accessories 46
Optional accessories 46
Operating precautions 47
Wireless remote control (optional accessory) 49
Parts and their functions 50
Camera unit 50
Wireless remote control: AW-RM50G (optional accessory) 61
Setting the remote control IDs 62
Network settings 63
Use the Easy IP Setup Software to establish the unit's settings 63
Use the Easy IP Setup Software Version.2 to establish the unit's settings 63
Setting the initial account 65
Installing the plug-in viewer software 65
How to turn the power on and off 66
Turning the power on 66
Turning the power off 66
Troubleshooting 67
Specifications 76
Index 77

Read this first!

ENGLISH

WARNING:
To prevent injury, this apparatus must be securely attached to the floor/wall in accordance with the installation instructions.

WARNING:
Installation should only be performed by qualified installation personnel.
Improper installation may result in the entire apparatus falling down and causing injury.

CAUTION:
This camera intended for use only with the Mount Bracket enclosed with the unit and Panasonic Direct Ceiling Mount Bracket, WV-Q105A.
Use with other apparatus is capable of resulting in instability causing possible injury.

CAUTION:
To reduce the risk of fire or electric shock, install making sure that the mounting screws do not come in contact with electrical wiring within the wall.

indicates safety information.

Lire ces informations en premier !

FRANÇAIS

AVERTISSEMENT:
Pour éviter tout risque de blessures, l'appareil doit être solidement fixé au plancher/mur conformément aux instructions d'installation.

AVERTISSEMENT:
L'installation ne doit être effectuée que par du personnel d'installation qualifié.
Une mauvaise installation peut avoir pour conséquence la chute de l'appareil et provoquer des blessures.

ATTENTION:
Cette caméra est conçue pour être utilisée uniquement avec la potence de fixation fournie avec l'appareil ou avec la potence de fixation directe au plafond Panasonic WV-Q105A.
L'utilisation de tout autre dispositif risque de se traduire par une instabilité et être cause de blessures à des personnes.

ATTENTION:
Pour réduire les risques d'incendie ou d'électrocution, faire l'installation en s'assurant que les vis de montage n'entrent pas en contact avec un fil électrique présent dans le mur.

Informations concernant la sécurité.

Lea esto primero!

ESPAÑOL

ADVERTENCIA:
Para evitar heridas, este aparato debe estar firmemente instalado al piso/pared de acuerdo con las instrucciones de instalación.

ADVERTENCIA:
La instalación solamente debe llevarla a cabo personal cualificado.
Una instalación incorrecta podría provocar la caída del dispositivo y causar lesiones.

PRECAUCIÓN:
Esta cámara ha sido diseñada para ser utilizada solamente con la ménsula de montaje suministrada con la unidad y con la ménsula de montaje directo en el techo de Panasonic modelo WV-Q105A.
La utilización con otros aparatos puede causar inestabilidad y posibles lesiones.

PRECAUCIÓN:
Para reducir el riesgo de incendio o descarga eléctrica, instálelo asegurándose de que los tornillos de montaje no entren en contacto con el cableado eléctrico dentro de la pared.

indica información de seguridad.

DEUTSCH

Bitte lesen Sie zuerst diesen Hinweis!

WARNUNG:
Um Verletzungen zu verhüten, muss dieser Apparat gemäß der Installationsanleitung sicher am Boden bzw. an der Wand befestigt werden.

WARNUNG:
Die Installation darf nur durch qualifiziertes Personal ausgeführt werden.
Fehlerhafte Installation kann zum Herunterfallen des Gerätes und zu Verletzungen führen.

VORSICHT:
Diese Kamera ist nur für den Einsatz mit der mitgelieferten Montagehalterung und der Panasonic Decken-Direktmontagehalterung WV-Q105A vorgesehen.
Wird die Kamera mit anderen Apparaten verwendet, kann es zu Instabilität kommen, die Verletzungen verursachen kann.

VORSICHT:
Zur Reduzierung der Gefahr von Brand und elektrischem Schlag bei der Installation sicherstellen, dass die Befestigungsschrauben nicht mit in der Wand verlegten elektrischen Leitungen in Berührung kommen.

▭ ist die Sicherheitsinformation.

ITALIANO

Leggere prima quanto segue!

AVVISO:
Per prevenire ferite, questo apparecchio deve essere montato saldamente al pavimento/muro in conformità alle istruzioni di installazione.

AVVISO:
L'installazione deve essere realizzata unicamente da tecnici qualificati.
Un'installazione incorretta può risultare nella caduta dell'apparecchio con conseguenti danni alle persone.

PRECAUZIONE:
La videocamera deve essere utilizzata esclusivamente con la staffa di montaggio in dotazione con l'unità e con la staffa per montaggio diretto a soffitto WV-Q105A.
L'uso con altri apparecchi potrebbe causare instabilità ed eventuali infortuni.

PRECAUZIONE:
Per ridurre il rischio di incendio o di folgorazione, installare accertandosi che le viti di montaggio non vengano a contatto con i cablaggi elettrici all'interno del muro.

▭ sono le informazioni sulla sicurezza.

РУССКИЙ

Прочитайте нижеследующее до начала эксплуатации!

ОСТОРОЖНО:
Во избежание повреждения данный прибор должен быть надежно закреплен на полу/стене в соответствии с инструкцией по установке.

ОСТОРОЖНО:
Установка должна выполняться только квалифицированным специалистом по установке.
Ненадлежащая установка может привести к падению всего аппарата и получению травмы.

ВНИМАНИЕ:
Данная камера предназначена для использования только с монтажным кронштейном, поставляемым с устройством, и монтажным кронштейном Panasonic для непосредственного крепления к потолку WV-Q105A.
Использование с другим аппаратом может привести к нарушению устойчивости и возможной травме.

ВНИМАНИЕ:
Для снижения риска возникновения пожара или удара электрическим током при выполнении установки следите за тем, чтобы крепежные винты не коснулись электропроводки в стене.

▭ Данный знак обозначает информацию, относящуюся к технике безопасности.

Installation precautions

Panasonic does not accept any responsibility for accident or damage during installation if procedure in this manual is not followed.

To installation personnel
Read the “Installation Instructions” thoroughly and then perform the operation correctly and safely.
Also, always read the “Read this first!” (→ page 4) of this manual as they contain important information.
After the installation, give the “Installation Instructions” to the customer to save for future use.

■ Ensure that the installation work complies with the technical standards governing electrical equipment.

■ This unit is for indoor use only.

It cannot be used outdoors.
Avoid installation in a location where the unit will be exposed to direct sunlight for extended periods or near a cooling or heating appliance. Otherwise, deformation, discoloration, malfunctioning and/or problems in operation may result. Operate the unit where it will not be splashed or sprayed by water.

■ Use the unit with an installation where the unit is suspended from an overhead surface or with a stand-alone installation.

Do not use the unit on its side or tilted at an angle.

<NOTE>
- Be absolutely sure to use the four bracket mounting screws (M4) for mounting the mount bracket. These are supplied with the unit.
  Do not use wood screws, nails, etc.
  In the case of a concrete ceiling, secure the unit using anchor bolts (for M4) or AY plug bolts (for M4).
  Recommended clamping torque
  M4 : 1.47 N · m {15 kgf · cm}
- The withdrawal strength of the mounting location for each screw must be at least 133 N {13.5 kgf}.
- When mounting the unit on a ceiling made of plasterboard, for instance, if it is not strong enough to support its weight, either reinforce the ceiling adequately or use the WV-Q105A direct ceiling mount bracket, which is sold separately.
- When using a mount bracket which is sold separately, read the handling instructions.
- Do not hold the camera head while undertaking the installation work. Doing so may cause malfunctioning.

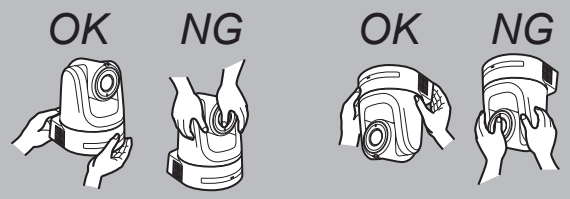

Desktop installation **Hanging installation**

■ Concerning the installation location

Install the unit in a stable location which will not be susceptible to shaking. If the unit is installed in a location which is susceptible to shaking, this will cause the unit’s images to shake in turn.
Install the unit after conferring in detail with your dealer.
Install the unit on a ceiling that is strong enough (such as a concrete ceiling).
If the unit is to be installed on a ceiling which is not strong enough, reinforce the ceiling sufficiently first.

Through the adoption of the Direct Drive system and Panasonic proprietary technology, we have achieved quietness and high precision in panning and tilting.
In order to get the most from the characteristics of the Direct Drive system, install in a stable location that does not shake and that has sufficient stiffness. Shaking of the installation location can be the cause of performance deterioration and malfunctions in the camera.

If the camera is installed in a location with insufficient stiffness, the pan and tilt control characteristics may be adversely affected, leading to unstable operation.
- In environments such as the following, there may be unusual operation sounds during pan and tilt, and operational errors may occur.
  If you are concerned about unstable pan and tilt operations after installation, please contact your dealer.

<Installation examples that may cause performance deterioration and malfunctions>
Ⓐ Single point attachment to a cylindrical pole structure that has a small diameter
Ⓑ Single point attachment to a movable structure

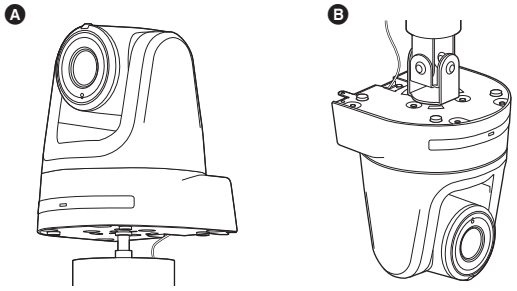

■ Do not install or use the unit in the following kinds of locations.

- On walls (where the unit would be installed sideways)
- In locations (including places such as under the eaves of a building) where the unit would be directly exposed to rain or water
- In locations such as kitchens where there are high concentrations of steam and grease
- In outdoor locations or hot places where the temperature will exceed 40 °C (104 °F)
- In cold locations where the temperature will drop below 0 °C (32 °F)
- In locations where the humidity will exceed 85%
- In locations where chemicals are used such as near swimming pools
- At sea, in coastal areas or in locations where corrosive gases are emitted
- In locations where radiation, X-rays, or strong radio waves or magnetic fields are generated
- In locations where the unit would be subject to a great deal of vibration such as on board a vehicle or ship (this unit is not designed to be used in vehicles)
- In locations where the temperature is subject to sudden changes such as near the air outlet of an air conditioner or near a door which allows the outside air to come in

AW-UE100 main unit	Mounting conditions					
	Applicable mount bracket			Mounting onto the ceiling		
Mass	Model No.	Mass	Mounting	Recommended screws	No. of screws	Minimum withdrawal strength (per screw)
Approx. 2.2 kg (4.84 lb) (excluding mount bracket) Cable cover Approx. 0.1 kg (0.22 lb)	Direct mount (supplied accessory)	Approx. 0.25 kg (0.55 lb)	Hanging/Desktop	M4 screws (supplied accessory)	4	133 N {13.5 kgf} • Ensure that the mounting strength can support a weight that is at least five times the total mass of the equipment, including the camera’s main unit.
	WV-Q105A (optional accessory)	Approx. 0.15 kg (0.33 lb)	For ceiling	M4 screws (supplied with the WV-Q105A)	4	

Installation precautions (continued)

What to avoid to ensure that the unit will perform stably over a prolonged period

- Using the unit for a prolonged period in a location with high temperature and humidity levels will cause its parts to deteriorate and shorten its service life.
- Ensure that a cooling unit or heating unit will not blow any air directly toward the installation location.

Be absolutely sure to use the supplied brackets and screws to install the camera.

- Do not mount the unit by employing any methods other than those specified.
- Do not remodel the mounting bracket or mounting screws provided with the unit.

Before installation, always disconnect the power plug

When installing, always use the supplied components.
Do not disassemble or modify the wall mount adaptor.

Tightening up the mounting screws

- Tighten up the screws and bolts securely to the degree that is appropriate for each of the materials used in the mounting location and structures.
- After tightening up the screws and bolts, check that there is no unsteadiness and that the parts have been tightened securely.
- Use the specified tools and tighten the screws firmly.
- Tighten up the screws using the specified torque driver. Do not use electrical drivers or impact drivers.

When the unit is no longer going to be used, do not leave it lying around, but be absolutely sure to dispose of it properly.

For details on how to remove the unit, refer to “Removing the camera” (→ page 15).

When installing, transferring or disposing of the unit, be absolutely sure to hold it by its pedestal area.

Problems may result if the camera head is held or rotated.

Do not attach a filter, hood, extender or other parts to the unit.

Use the dedicated AC adaptor and power cable provided with the unit.

Connect the AC adaptor and power cable to the power inlet securely.

Installing the AC adaptor

- Do not place the adaptor directly onto a ceiling panel or other such surface.
  Extreme danger is posed when water has collected on the surface as a result of leaking rain, for instance.
  Secure the adaptor firmly to the bottom or other surface of a reinforcing member made of channel steel where dust and other foreign matter will not accumulate. (→ page 14)
- Secure the adaptor firmly so that there will be no chance that it will fall off or fall down.
  Secure it using a strength which can withstand the mass of the AC adaptor.

Install the accessory AC adaptor near the main power outlet, and position it in such a way that its power plug can be plugged into and unplugged from the outlet easily.

When connecting the AC adaptor to a power outlet on the ceiling or on any other surface where dust may collect, wipe off the dust on the power plug at periodic intervals as an antitracking measure.

Power switch

This unit does not have a power switch. When the power is supplied, the pan, tilt, zoom and focusing operations are performed.*1 Before proceeding with maintenance, be absolutely sure to disconnect the power plug from the power outlet.

*1
- Under factory default conditions, the unit will be in Standby mode when power is supplied for the first time. (Status display lamp: Lit orange)
- When the power supply is cut off while the unit is in Standby mode, the unit will be in Standby mode the next time power is supplied. (Status display lamp: Lit orange)
- When the power supply is cut off while the unit is in Power ON mode, the unit will be in Power ON mode the next time power is supplied. (Status display lamp: Lit green)

(For details, refer to “How to turn the power on and off” (→ page 66).)

Connecting the power cable

Be absolutely sure to connect the power cable of the AC adaptor through a circuit breaker using one of the following methods.

(1) Connect the power cable through a power control unit.
(2) Connect the power cable to a circuit breaker in a power distribution panel with a contact distance of 3.0 mm (1/8 inches) or more.
Use a circuit breaker which is capable of shutting off all the poles of the main power supply with the exception of the protective ground conductor.
(3) Install the AC adaptor near the power outlet, and connect it through the power plug.

Grounding

Before operating the unit, check that SIGNAL GND has been securely grounded.

If there is a possibility of noise interference

Either wire the cables so that the power cable (ceiling light cord) of AC 100 V*2 (AC 220 V*3) or more, and the signal cable are placed at least 1 meter (3.3 ft) apart.
Alternatively run each cable through its own metal conduit.
(The metal conduits must be grounded.)

*2 For AW-UE100WPC, AW-UE100KPC
*3 For AW-UE100WE, AW-UE100KE, AW-UE100WED, AW-UE100KED

Radio signal interference

If the unit is positioned near a TV or radio transmitting antenna or a strong electrical field or magnetic field (such as that generated by a motor, transformer or power lines), its images may be distorted and/or the images may be affected by noise.

When connecting the cables, ensure that the connector areas will not be subject to any load.

Doing so may cause malfunctioning.

Allowing the generated heat to escape

This unit allows the heat generated inside to escape from its surfaces. Do not install the unit in a location where it will be surrounded by walls or other surfaces and where heat will be trapped.
In addition, the heat is dissipated to the bottom panel which will warm up over time: This is normal and not indicative of any trouble.

PoE++ power supplies

Use a PoE++ (IEEE 802.3bt compliant) compatible hub or power supply device.

Network settings

The network function of this unit does not work unless an initial account is set up (except when using the Easy IP Setup Software (→ page 63)). A personal computer is required to set up an initial account. (→ page 65)

<NOTE>

- Network connection with AW-RP150 or AW-RP60 requires setup of an initial account. (→ page 65)
  When an initial account is not set up, AW-RP150 or AW-RP60 can detect but cannot control this unit.

Before installation

Be sure to configure the switches on the connector panel and bottom of the unit before installing it.
Configuring the switches after the unit is installed may prove difficult.

IR ID switch settings

The IR ID switches are located on the connector panel of the unit.

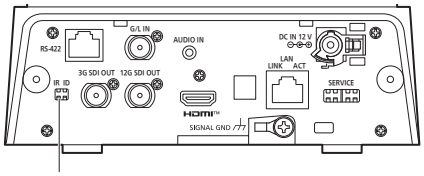

IR ID switch

CAM1	CAM2	CAM3	CAM4
IR ID	IR ID	IR ID	IR ID

These are used to select the ID of the wireless remote control (optional accessory). (→ page 62)
The IR ID switch settings “CAM1” to “CAM4” correspond to the <CAM1> to <CAM4> buttons on the wireless remote control.

Service switch settings

The service switches are located on the connector panel of the unit.
Perform switch settings before turning the unit on.

Service switch

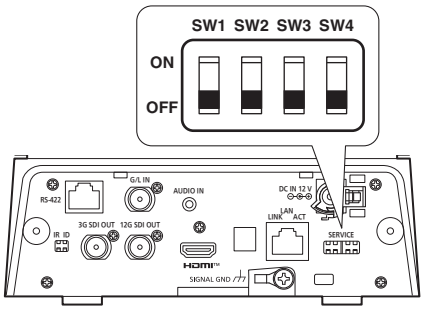

Function		Factory settings
SW1	Switches for initialization (Refer to the explanations in “Initialization 1” and “Initialization 2”)	OFF
SW2	Always leave at OFF (used for factory adjustments)	OFF
SW3		OFF
SW4		OFF

Initialization 1

- Reset the user authentication settings and host authentication settings for network connection.
  (This will delete all the registered user information (IDs/passwords) and host information (IP addresses).)
- With the IR ID switches and service switches set as shown below, turn on the power of the unit.

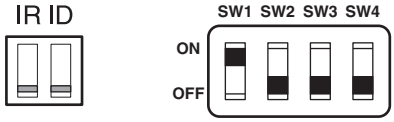

<NOTE>

- When initialization is complete, the status display lamp on the front of the unit blinks green. Set the service switches back to their original positions (SW1 to SW4 all OFF), then restart the unit.

Initialization 2

- The unit is reset to the state it was in at the time of purchase. (All camera menu setting values and network setting values are reset.)
- With the IR ID switches and service switches set as shown below, turn on the power of the unit.

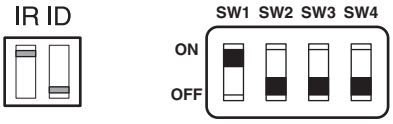

<NOTE>

- When initialization is complete, the status display lamp on the front of the unit blinks green. Set the service switches back to their original positions (SW1 to SW4 all OFF), then restart the unit.

■ Setting the installation method (“Desktop” or “Hanging”) from the OSD menu

Set “Desktop” or “Hanging” in [Install Position] on the [Pan/Tilt 1/2] screen from the OSD menu of this unit.

```
## Pan/Tilt 1/2 ##

⇨Install Position          Desktop
 Smart Picture Flip            Off
  Flip Detect Angle          90deg
 P/T Speed Mode    Normal(60deg/s)
 P/T Acceleration Setting
 Speed With Zoom Position       On
 Focus Adjust With PTZ.        Off
 Privacy Mode                  Off

 Return
```

Install Position
[Desktop, Hanging]

[Desktop] or [Hanging] is selected here as the method used to install the unit.

Desktop	Stand-alone installation
Hanging	Suspended installation

<NOTE>

- When [Hanging] has been selected, the top, bottom, left and right of the images will be reversed, and up/down/left/right control for panning and tilting will also be reversed.

How to install and connect the unit

Be absolutely sure to read through the "Read this first!" (→ page 4) and "Installation precautions" (→ pages 6 to 7).

The procedure given here is for the kind of installation where the unit is suspended from an overhead surface, but the same steps are followed for a stand-alone installation.

If the ceiling panel is not strong enough to bear the unit's weight, use the kind of mount bracket that is supported by anchor bolts between the concrete ceiling and ceiling panel. The unit supports the WV-Q105A direct ceiling mount bracket which is used solely for combination cameras. Use this bracket to install the unit. (→ page 14)
In a case like this, the holes (ø 60 mm (ø 2-3/8 inches)) for installing the direct ceiling mount bracket on the ceiling must be drilled in the ceiling panel.
It is also recommended that you provide an inspection space or opening for access purposes in the area near where the equipment is installed in order to facilitate installation and the wiring connections work.
For details on supplied accessories, refer to the page 46.

1. Check the mounting space.

- Refer to the illustration, and determine where the unit is to be installed and in which direction it should be mounted. Factor in the unit mounting area and include space for the wires extending from its rear panel.
- The asterisk (∗) in the illustration marks the position and dimensions of the hole for mounting the mount bracket.

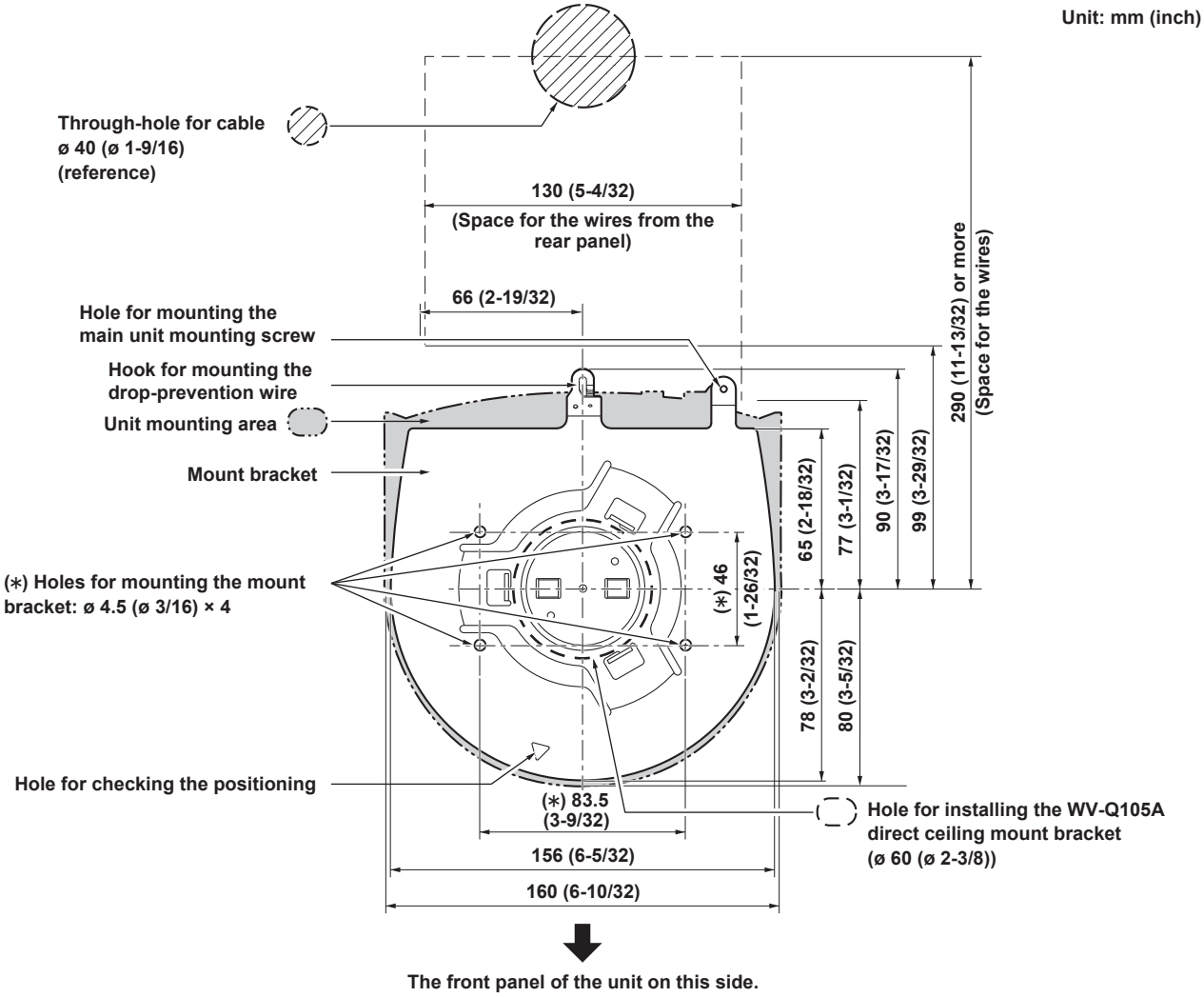

<NOTE>

- Before proceeding to install and connect the main unit, connect the LAN cable, HDMI cable and coaxial cables in the space above the ceiling panel, and then pass the cables through the cable holes.
- For a power outlet which is used on the ceiling, be absolutely sure to take measures to deal with the tracking that may be caused by the accumulation of dust and other foreign matter.

How to install and connect the unit (continued)

2. Mount the mount bracket onto the installation surface.

- Use the bracket mounting screws (M4, bind-head: 10 mm (13/32 inches) long) supplied with the unit.
- For proper clamping torque, securely attach the screws using the specified tools.

Screw diameter	Clamping torque
M4	1.47 N · m {15 kgf · cm}

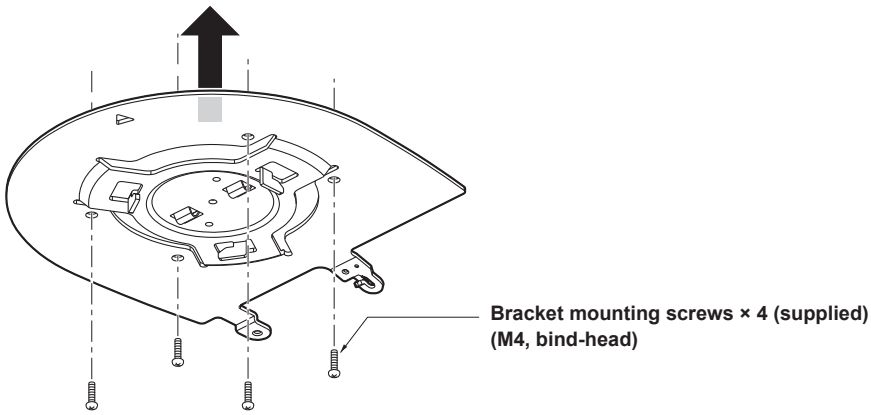

<NOTE>

- Use only the screws supplied with the unit. Do not use any other screws such as wood screws, nails, etc.

3. Attach the drop-prevention wire.

- Pull out the drop-prevention wire from the bottom panel of the unit, and engage the end with the wire ring through the hole of the mount bracket hook.
- Pull the drop-prevention wire, and check that it has been attached securely to the hook.

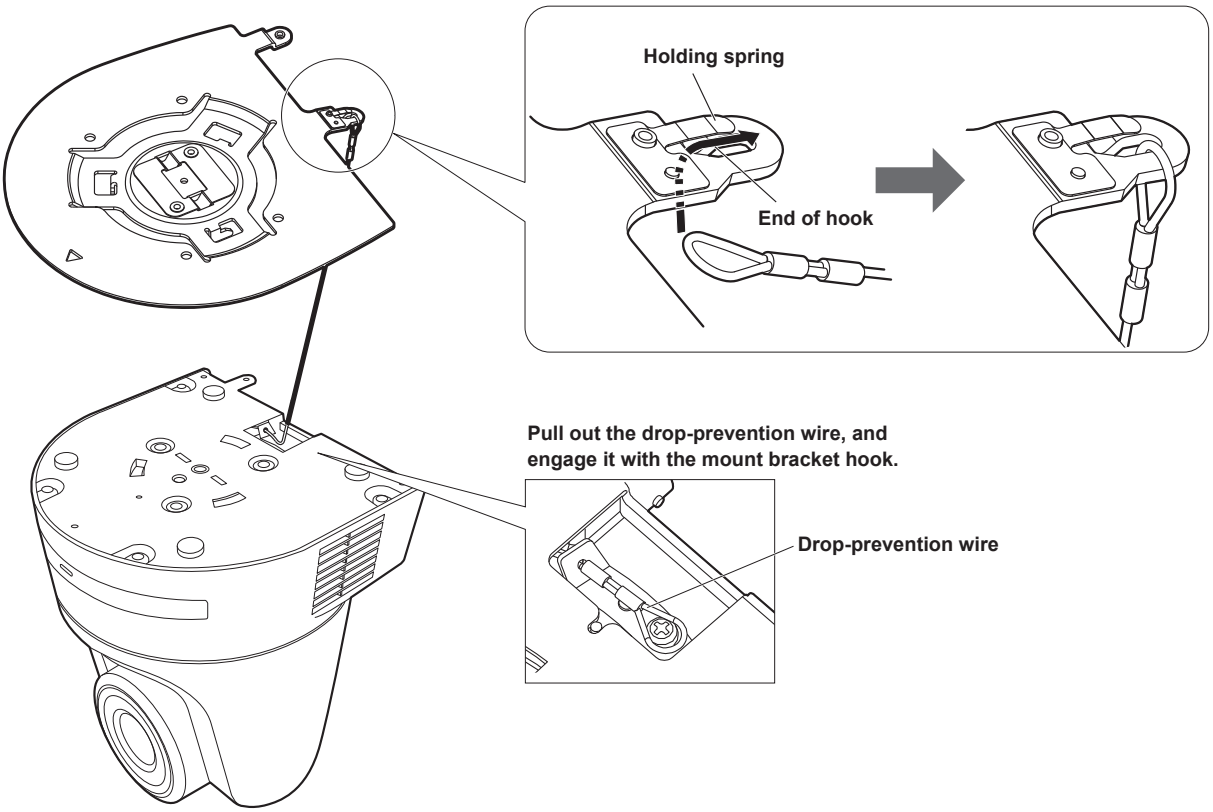

<NOTE>

- Do not do this work while holding the camera head since doing so may result in malfunctioning of the unit.
- The drop-prevention wire is designed to be used for installation where the unit is suspended from an overhead surface so do not subject it to the weight of units other than the unit.

How to install and connect the unit (continued)

4. Mount the unit.

- Align the position of the hole for checking the positioning with the status display lamp.
- Align the holes on the camera main unit used to insert the bottom panel with the protrusions on the mount bracket used for inserting the camera, push the bracket and camera firmly together, and rotate the main unit by about 15 degrees in the direction of the arrow.
- Secure the mount bracket to the unit using the main unit mounting screw (M3) as supplied.
- Attach the mount bracket securely with the prescribed tool using the clamping torque below.
- Be absolutely sure to verify that none of the screws are loose.

Screw diameter	Clamping torque
M3	0.78 N · m {8 kgf · cm}

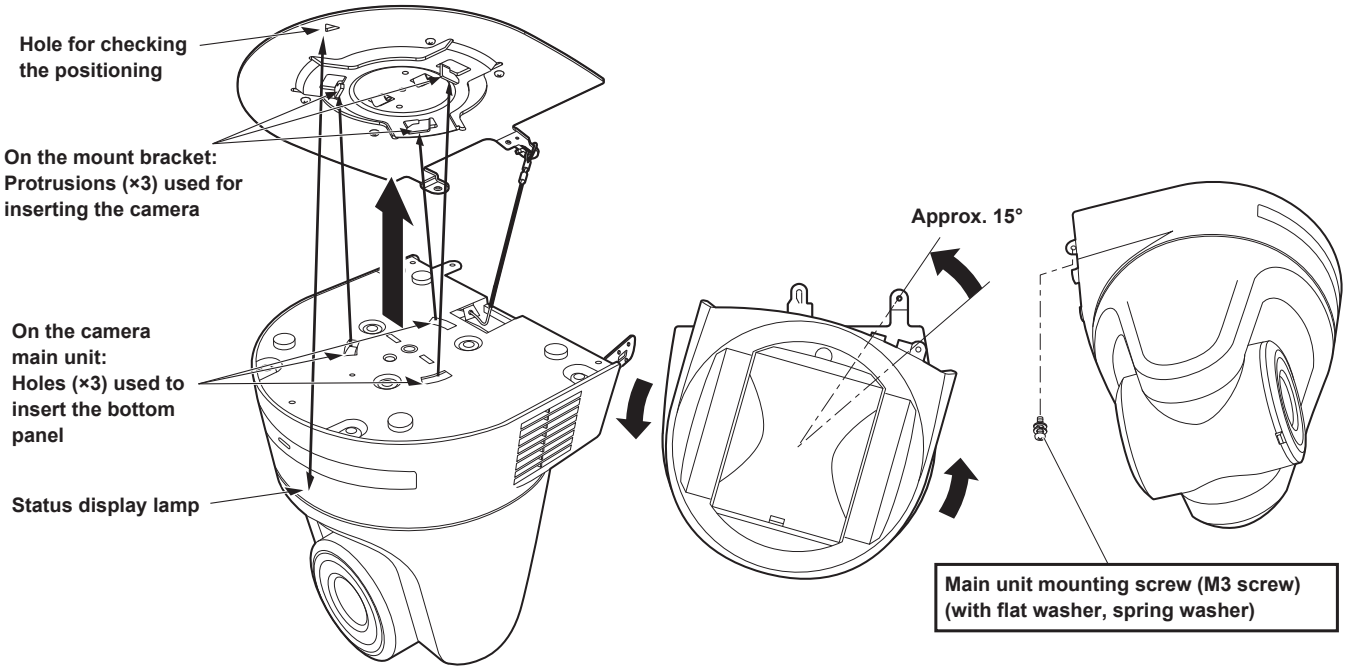

<NOTE>

- Do not do this work while holding the camera head since doing so may result in malfunctioning of the unit.
- Use only the screws supplied. Do not use any other screws.
- Check that the unit has been mounted securely with no tilting or wobbling.
- The unit must be secured without fail using the main unit mounting screw before any of the cables are connected.

5. Check the mounting.

Check out the following points.

- **The main unit mounting screw must be mounted securely.**
- **The unit must not tilt, and it must be mounted exactly.**
- **The unit must be securely installed.**
- **The unit pedestal part must not rotate even when an attempt is made to turn it.**

How to install and connect the unit (continued)

6. Connect the rear panel connectors.

Anchor the AC adaptor cable in place using the cable clamp.

<NOTE>

- Do not connect PoE cable to the RS-422 port.
- For details on recommended products, refer to the catalog or consult your local dealer.
- Always disconnect the power supply before connecting or disconnecting cables.
  Connecting or disconnecting cables while the power is turned on may result in malfunctions.

● How to secure the AC adaptor cable

① Loosely secure the cable clamp.

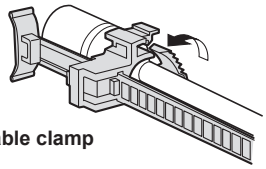

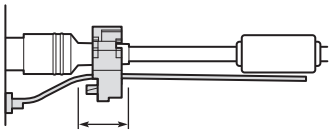

Loosely secure the cable clamp in the area shown above.

② Fasten the cable clamp.

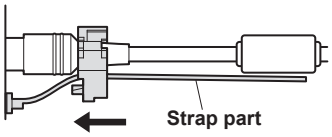

Take hold of the strap part, slide the cable clamp until it stops moving, and then secure it tightly.

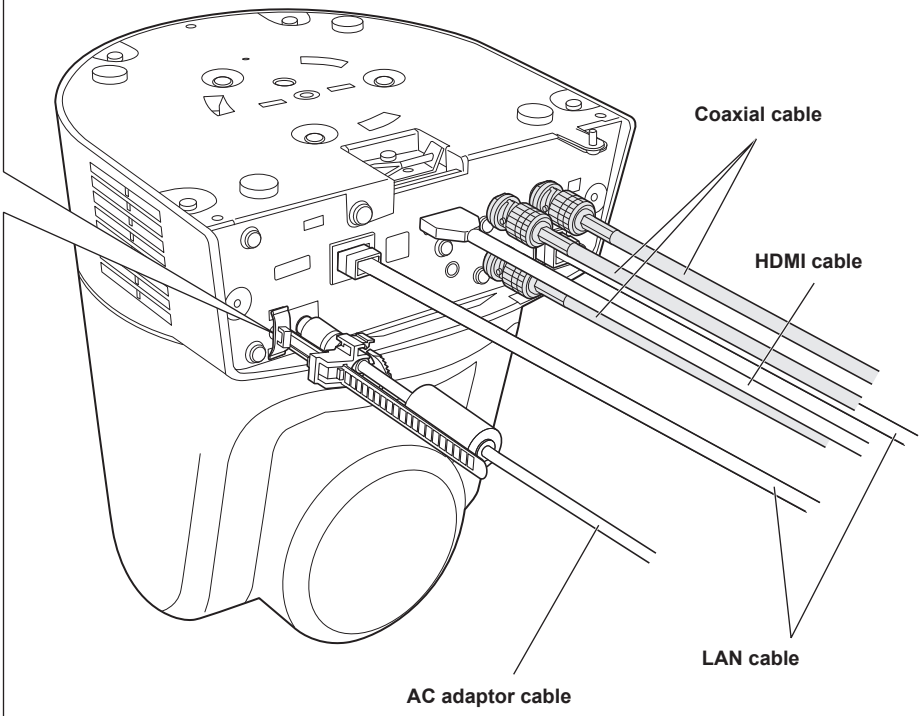

How to install and connect the unit (continued)

7. Attach the cable cover.

- Fit the two protrusions on the cable cover into the guides on either side of the camera main unit rear panel.
- Using the two screws (M3) supplied with the cable cover, secure the cable cover to the camera main unit.
- Attach the mount bracket securely with the prescribed tool using the clamping torque below.
- Be absolutely sure to verify that none of the screws are loose.

Screw diameter	Clamping torque
M3	0.78 N · m {8 kgf · cm}

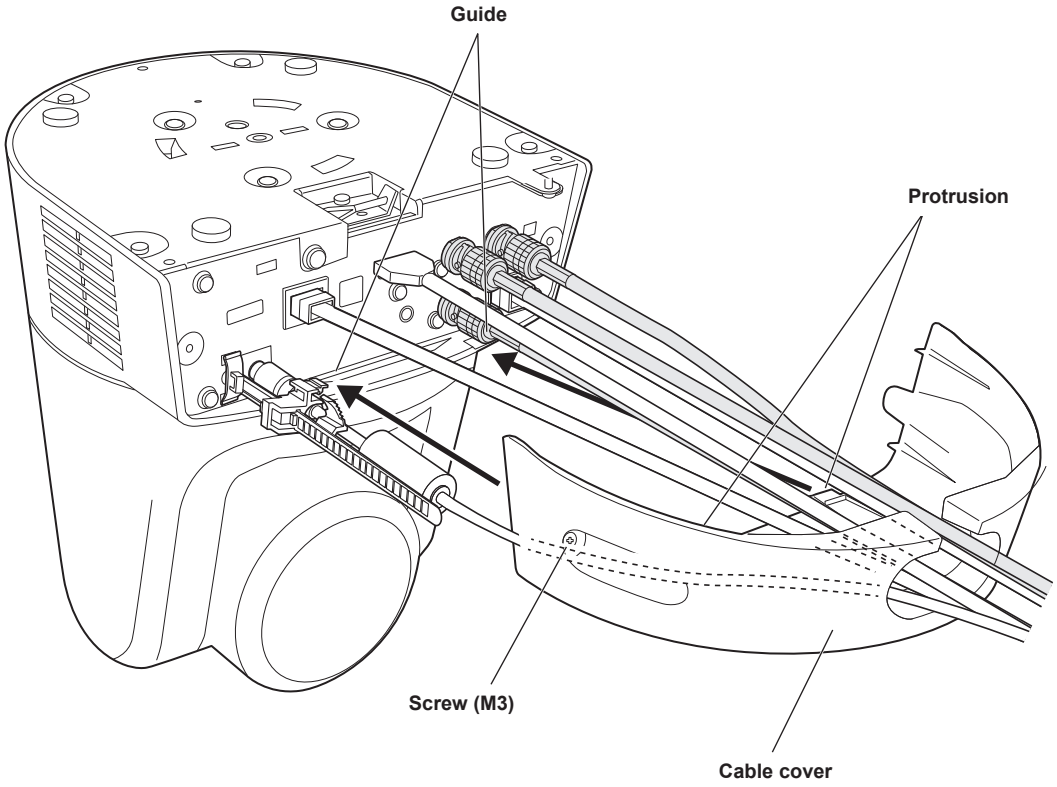

<NOTE>

- Be sure to tighten to the specified torque.
- Check that the unit has been mounted securely with no wobbling.

● Make the setting for Desktop/Hanging for reflecting the installed status on this unit.

When performing operations from a wireless remote control

① Press one of the <CAM1> to <CAM4> buttons on the wireless remote control to select the unit.
② Press and hold the <MENU> button for approximately 2 seconds to display the Top Menu.
③ Press the <▲> or <▼> button to select [Pan/Tilt].
④ Select [Install Position] and select [Desktop] or [Hanging] according to the installation conditions.

How to install and connect the unit (continued)

When using the WV-Q105A (optional accessory)

It is recommended that you provide an inspection opening or other such space for access purposes in the area near where the equipment is installed in order to facilitate installation and the wiring connections work.
Before mounting the mount bracket, check that the installation location is strong enough to withstand the total mass (approx. 2.7 kg (5.94 lb)) which will be exerted once the camera is mounted.
Use the mount bracket where the space between the ceiling panel and the concrete ceiling is at least 100 mm (3-15/16 inches) high.
The bracket can be mounted where the thickness of the ceiling panel ranges from 5 mm (3/16 inches) to 40 mm (1-9/16 inches).
The drop-prevention wire (supplied with the WV-Q105A) must be used when mounting the direct ceiling mount bracket.

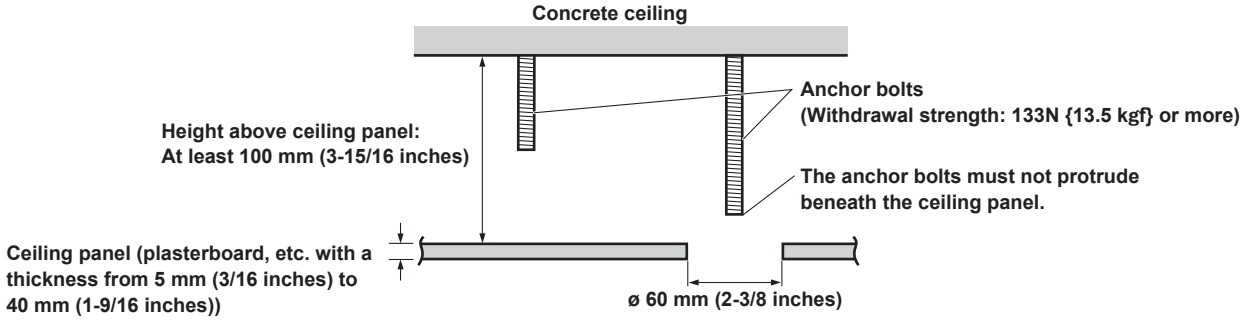

1. Refer to the Operating Instructions of the WV-Q105A direct ceiling mount bracket, and attach the WV-Q105A as well as the drop-prevention wire angle and drop-prevention wire supplied with the WV-Q105A to the anchor bolts.

> **Mounting the anchor bolts and direct ceiling mount bracket (∗)**
> This job is facilitated if the direct ceiling mount bracket is loosely secured to the ceiling panel in one place, and the direct ceiling mount bracket and anchor bolts are vertically aligned before the nuts are tightened up.

2. First, remove the screws which were loosely fastened in step 1, and then align the camera mount bracket of the AW-UE100 with the screw holes in the WV-Q105A direct ceiling mount bracket and mount it in place.

- Use the mounting screws (the M4-L60 Phillips head screws with adhesive) supplied with the WV-Q105A as the mounting screws.
- Fasten the AC adaptor securely to the bottom or other surface of the reinforcing member made of channel steel where dust and other foreign matter will not accumulate.
- Do not place the AC adaptor directly onto the ceiling panel or other such surface.

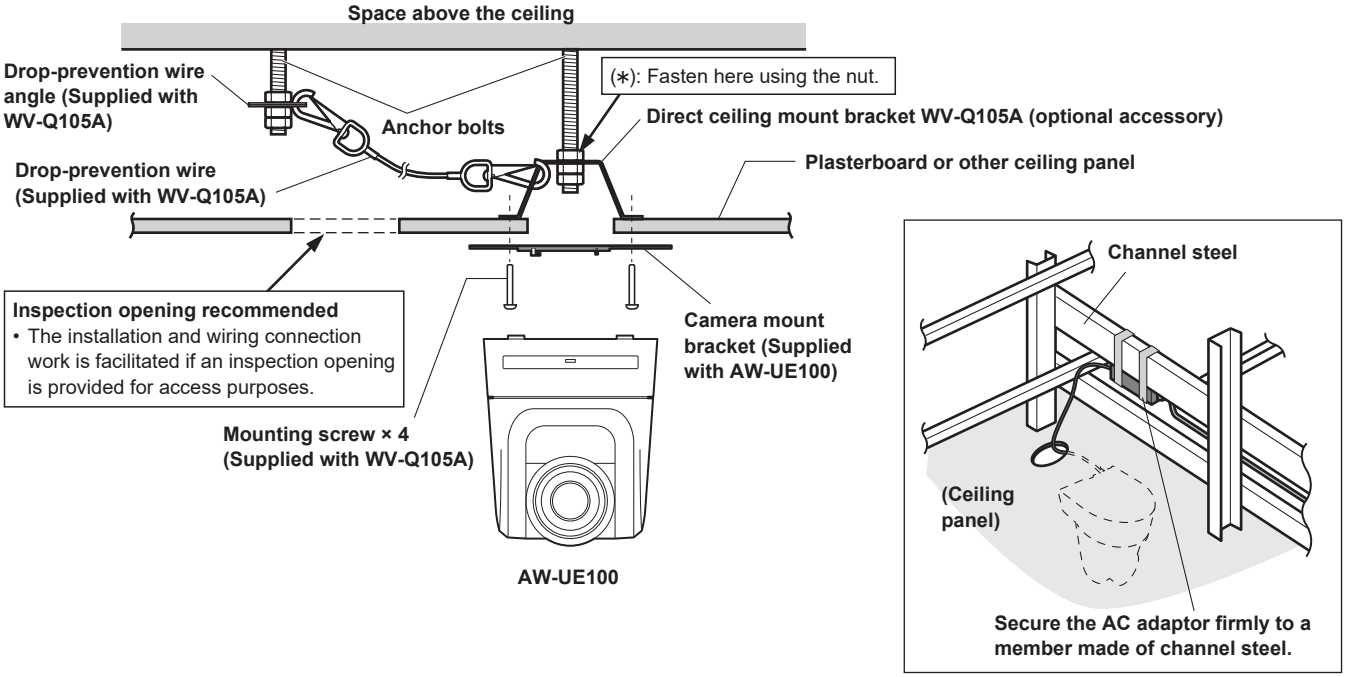

3. Install the AW-UE100 camera by following the procedure starting with step 3 on page 10.

Removing the camera

1. Turn off the circuit breaker and power.

2. Disconnect the cables.
Disconnect the LAN cable, and HDMI cable, etc.

3. Remove the main unit mounting screw used to secure the unit and mount bracket.

4. Push the unit (①). Turn it approximately 15 degrees away from the installed position (②), and remove it (③).

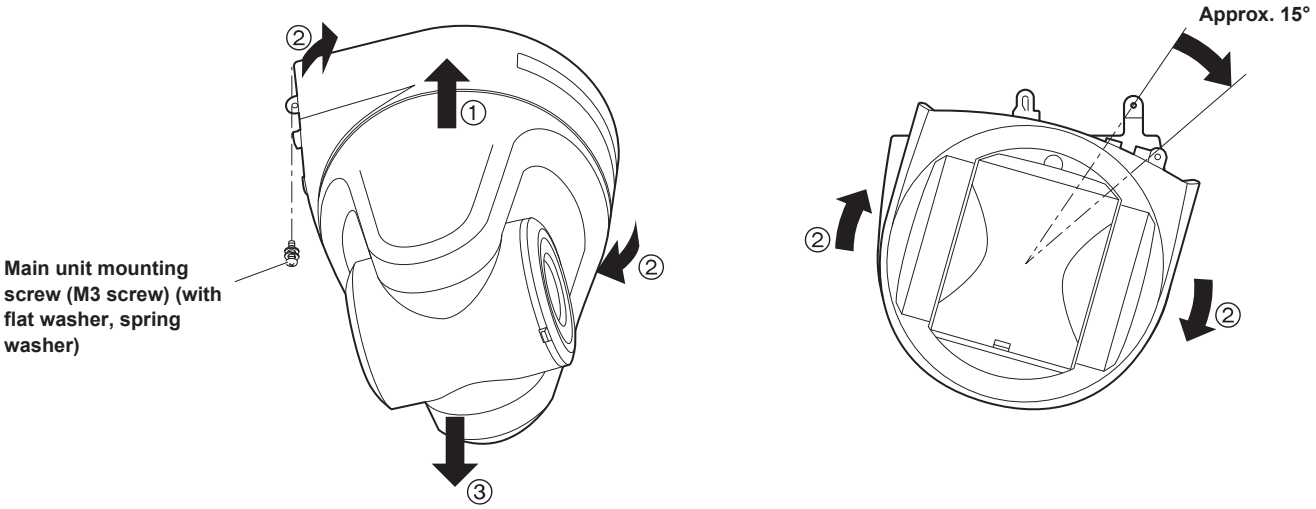

<NOTE>
- Do not do this work while holding the camera head since doing so may result in malfunctioning of the unit.

5. Disengage the drop-prevention wire from the mount bracket.

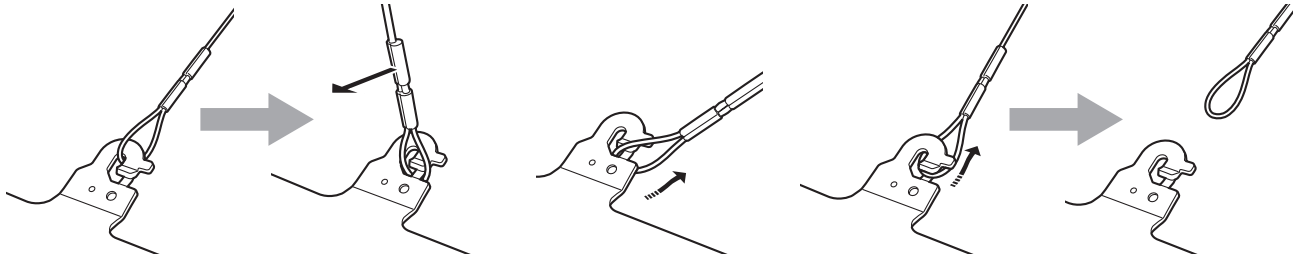

①Pull the dropprevention wire in the direction shown by the arrow above.

②Twist the wire, and remove the wire loop through the opening in the hook.

③Pull the wire in the direction shown by the arrow above, and simply pull it out.

Stand-alone installation (when the mount bracket is going to be used)

The same steps are followed as for the kind of installation where the unit is suspended from an overhead surface (→ pages 9 to 12).

1. Check the mounting space.

<NOTE>

- As with installing the unit suspended from an overhead surface, carefully check the space where the unit will be mounted, and then decide if it is appropriate to install the unit in that space.

2. Mount the mount bracket onto the installation surface.

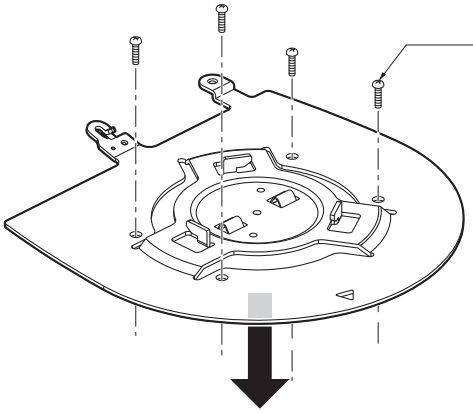

3. Attach the drop-prevention wire.

4. Mount the unit.

- Align the position of the hole for checking the positioning with the status display lamp.
- Align the holes on the camera main unit used to insert the bottom panel with the protrusions on the mount bracket used for inserting the camera, push the bracket and camera firmly together, and rotate the main unit by about 15 degrees in the direction of the arrow.
- Secure the mount bracket to the unit using the main unit mounting screw (M3) as supplied.

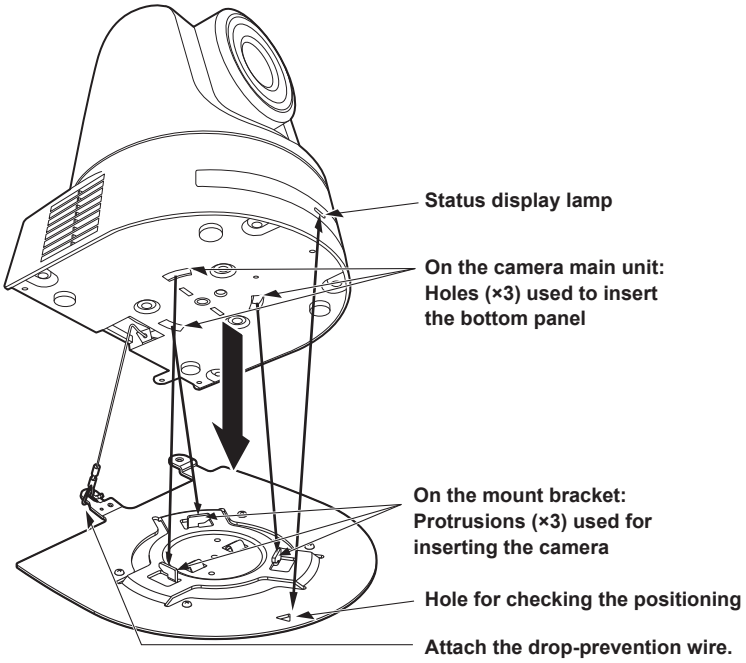

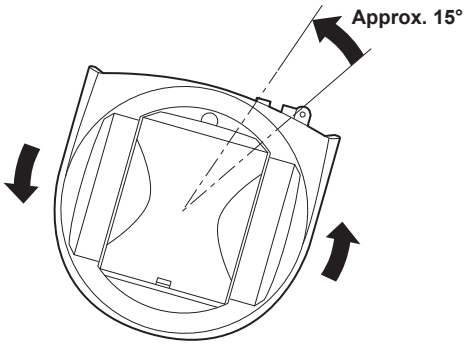

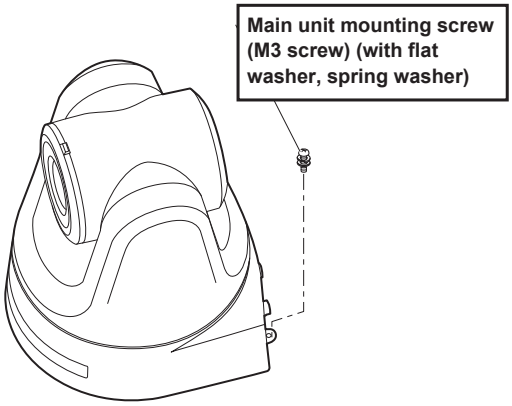

Stand-alone installation (when the mount bracket is going to be used) (continued)

5. Check the mounting.

6. Connect the rear panel connectors.

<NOTE>

- Do not connect PoE cable to the RS-422 port.
- For details on recommended products, refer to the catalog or consult your local dealer.
- Always disconnect the power supply before connecting or disconnecting cables.
  Connecting or disconnecting cables while the power is turned on may result in malfunctions.

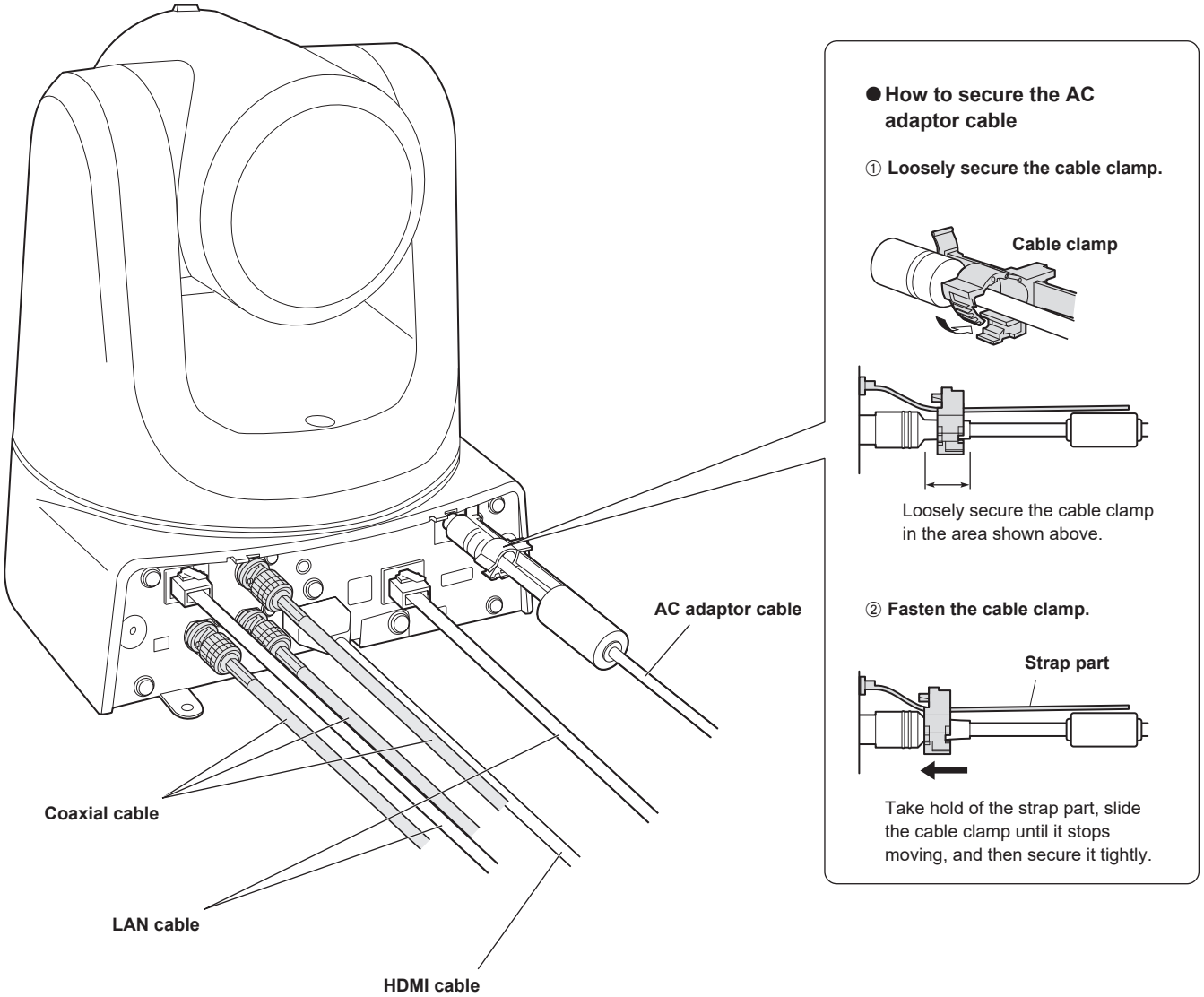

Stand-alone installation (when the mount bracket is going to be used) (continued)

7. Attach the cable cover.

- Fit the two protrusions on the cable cover into the guides on either side of the camera main unit rear panel.
- Using the two screws (M3) supplied with the cable cover, secure the cable cover to the camera main unit.
- Attach the mount bracket securely with the prescribed tool using the clamping torque below.
- Be absolutely sure to verify that none of the screws are loose.

Screw diameter	Clamping torque
M3	0.78 N · m {8 kgf · cm}

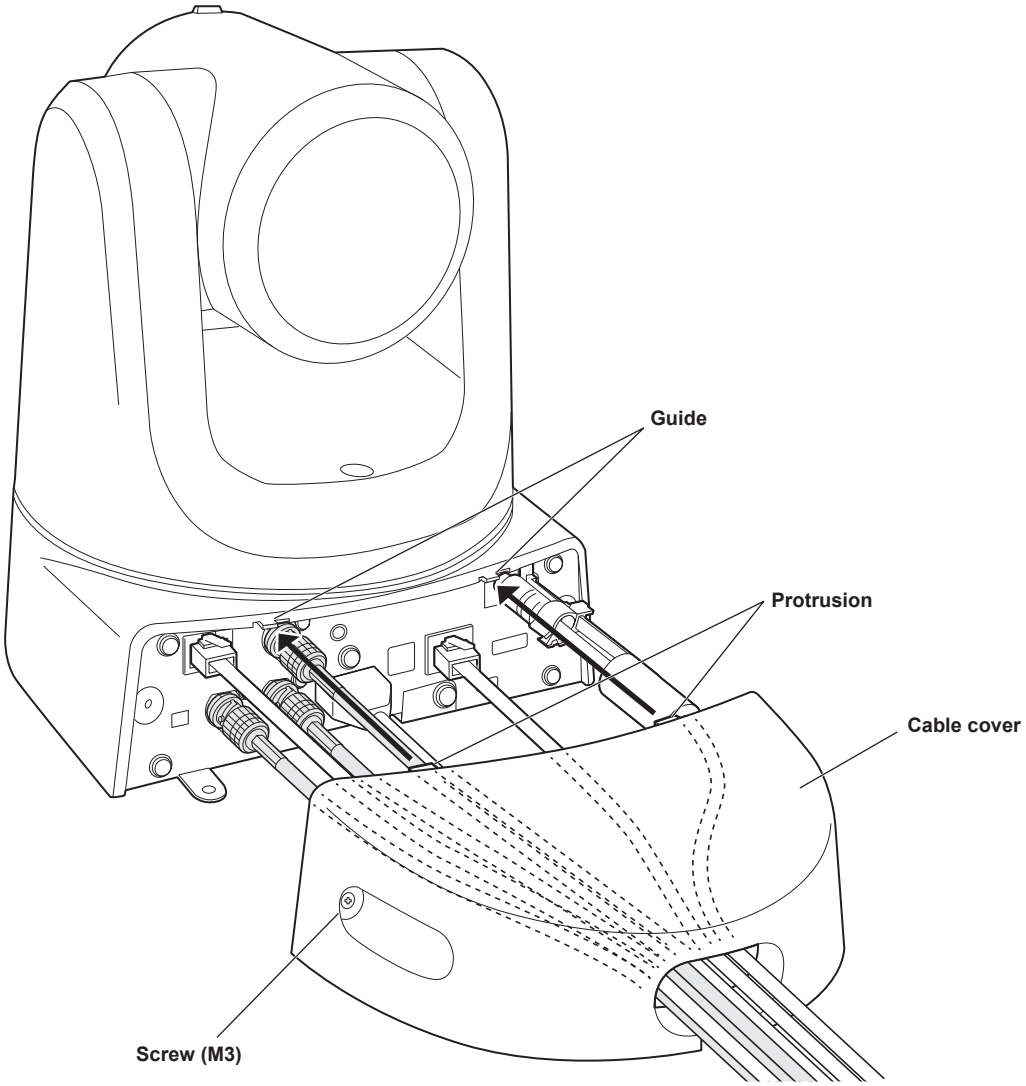

<NOTE>

- Be sure to tighten to the specified torque.
- Check that the unit has been mounted securely with no tilting.

Stand-alone installation (when the mount bracket is not going to be used)

When installing the unit on a desktop

Place the unit flat on the surface.

<NOTE>

- Install the unit in a stable location which will not be susceptible to shaking. If the unit is installed in a location which is susceptible to shaking, this will cause the unit's images to shake in turn.
- Take care not to allow the unit to fall or otherwise be damaged during installation.
- When carrying the unit, do not hold it by its head.
- Do not take hold of the camera head or rotate it. Doing so may cause malfunctioning.
- Take care not to pull the connected cables. Doing so may cause the unit to fall and/or it may result in injury.

Ensure that the unit will not fall off.

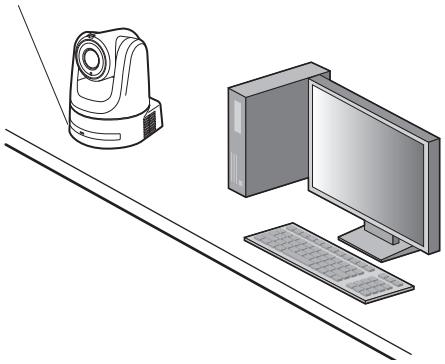

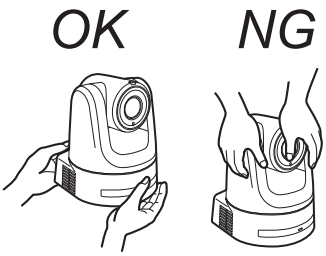

When mounting the unit on a tripod

Attach the tripod to the threaded holes for mounting the camera on the camera's bottom panel.
Place the tripod on a completely flat and level surface.
Tighten the screws by hand to mount the tripod securely.
Use screw for mounting the tripod that satisfy the following standard.

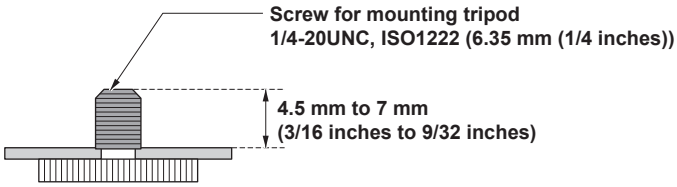

<NOTE>

- Do not install the unit where people will be passing back and forth.
- When using the unit mounted on a tripod, do not put the tripod high above the floor level.
- Mount the unit securely so there is no looseness. Looseness may cause the unit to fall off and/or result in injuries.
- When the unit is going to be used for a prolonged period of time, take steps to ensure that the unit will not topple or fall over and that it will not fall off or fall down. After using the unit, restore the installation location to its original state without delay.

Connections

Connecting an NDI|HX compatible switcher

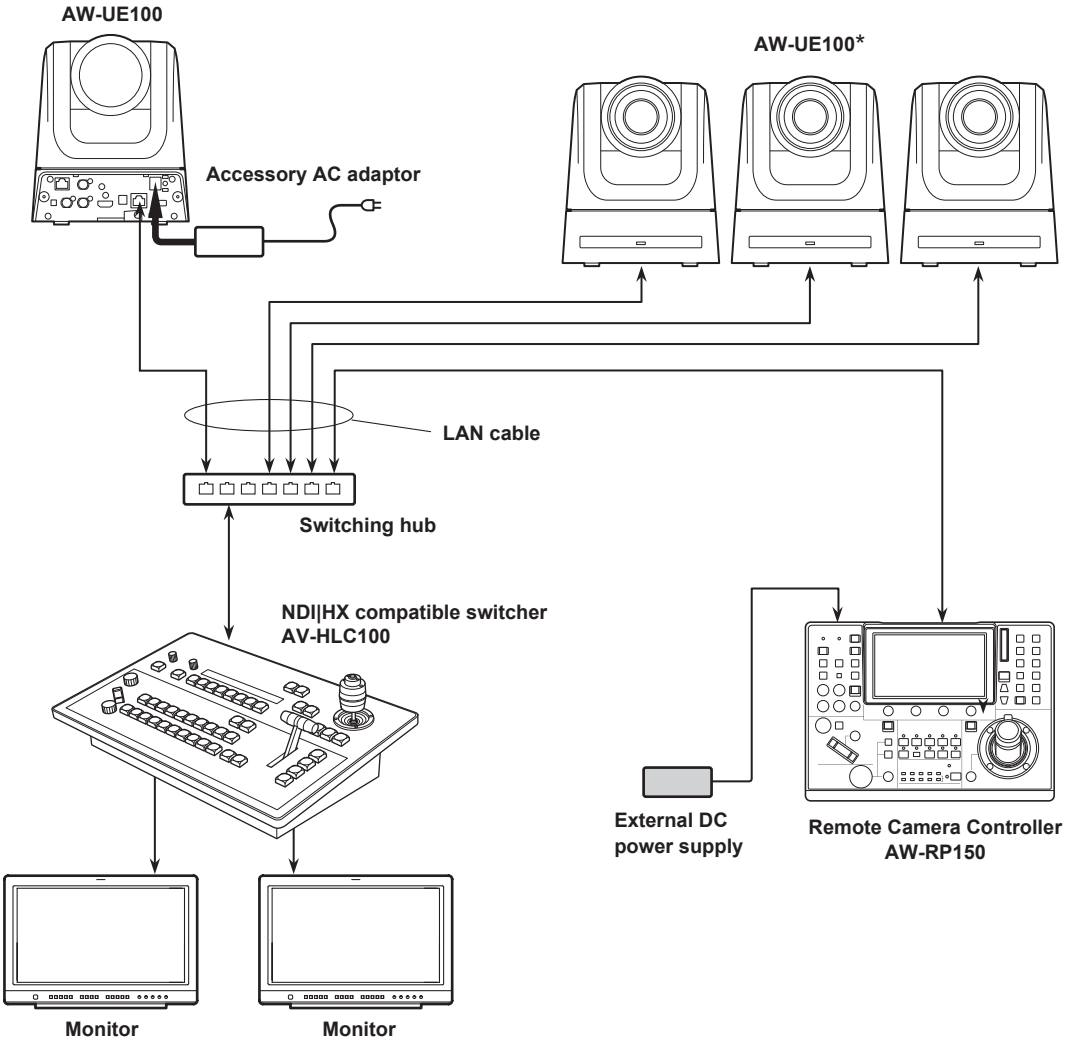

*: The AC adaptor provided with the unit is not shown in the above figure.

Connections (continued)

Connections with a controller (AW-RP150)

■ Example of connection for the function for cropping 4K images to HD images

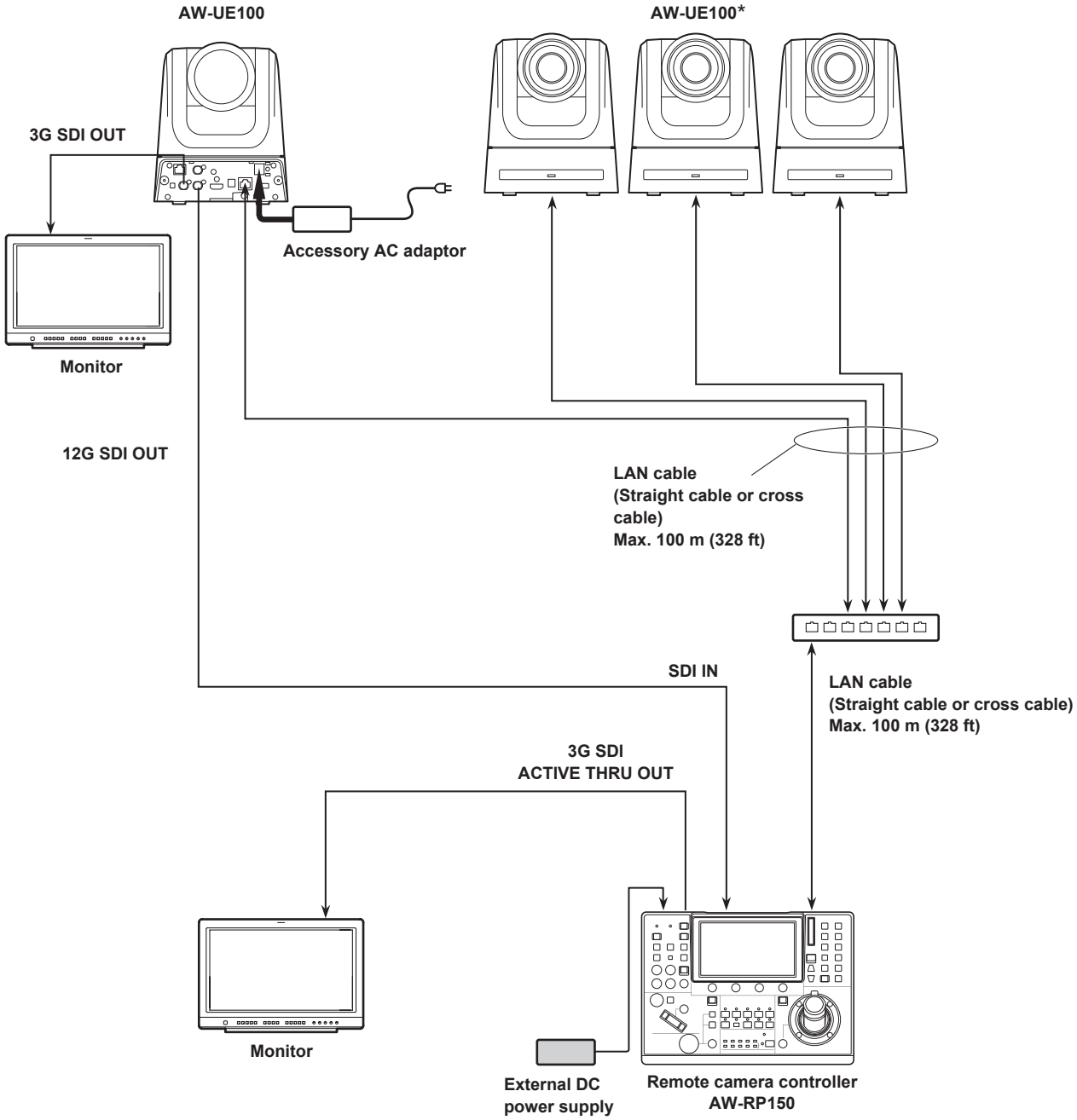

*: The AC adaptor provided with the unit is not shown in the above figure.

- Use a category 5e cable for the LAN cable.
- When using 12G SDI OUT and 3G SDI OUT for the cropping and output, use HDMI output for 4K video.

Connections (continued)

System example 1 (Serial control)

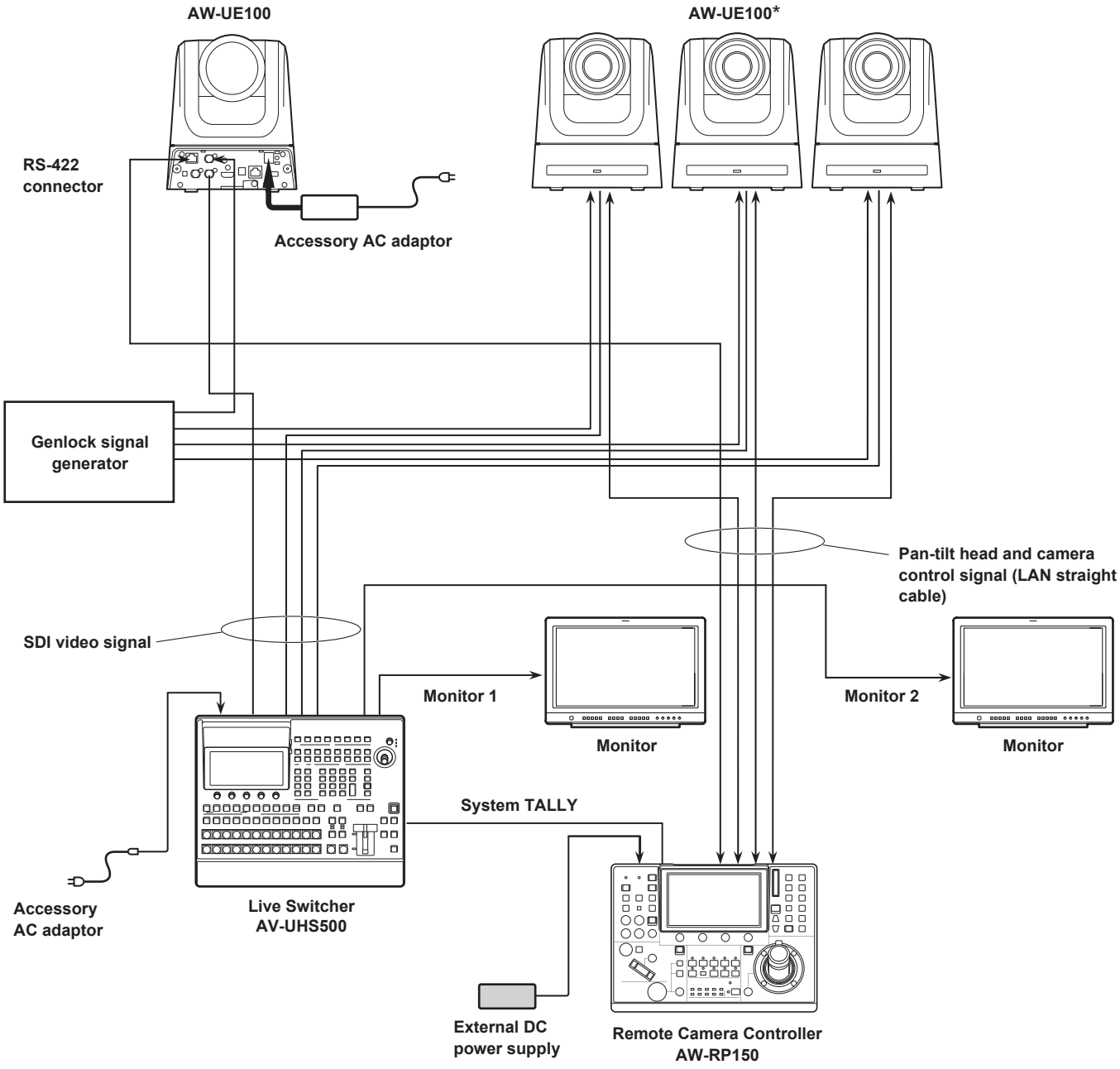

*: The AC adaptor provided with the unit is not shown in the above figure.

Connections (continued)

System example 2 (IP control)

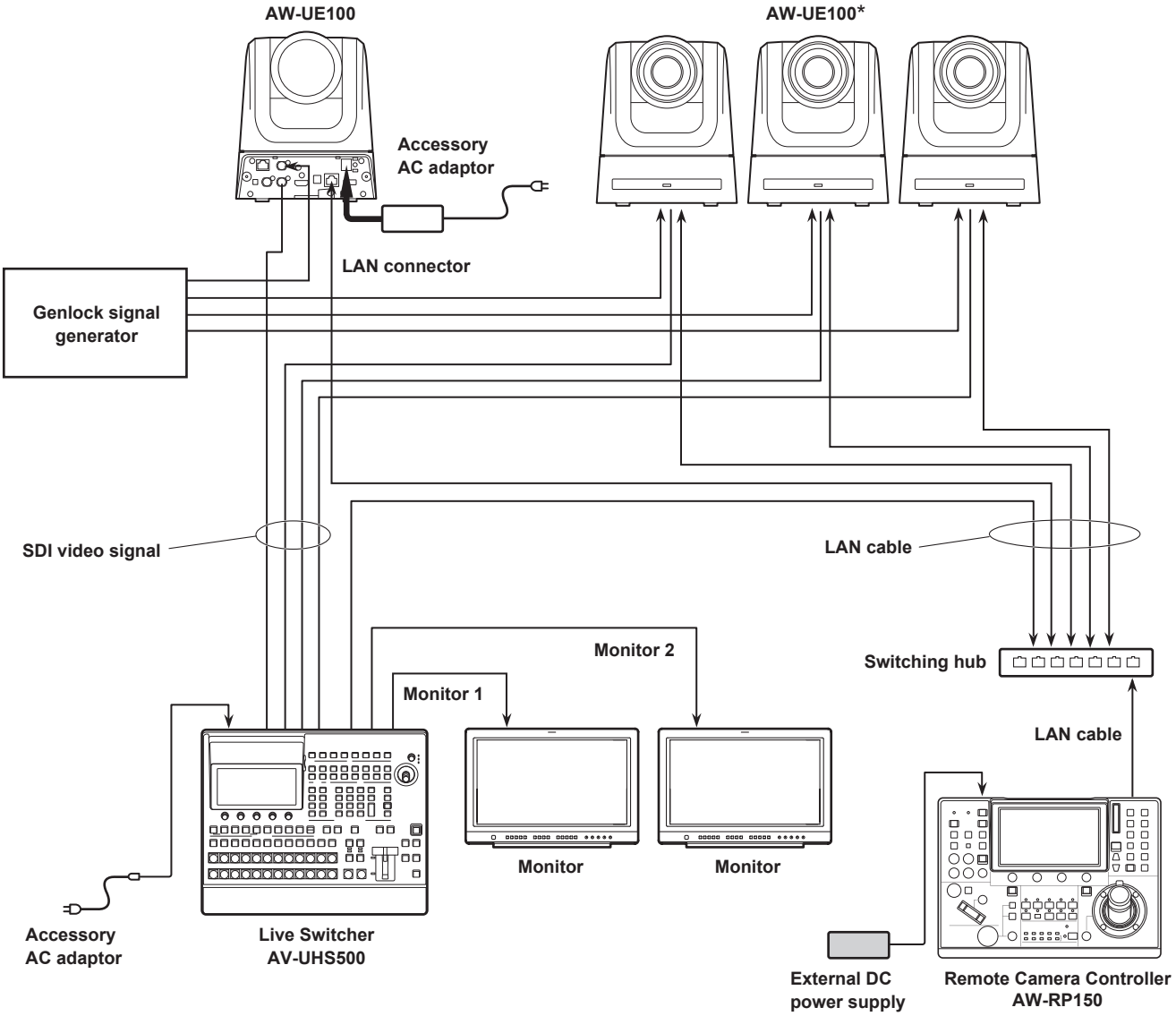

*: The AC adaptor provided with the unit is not shown in the above figure.

Connections (continued)

System example 3 (IP image transmission, PoE++)

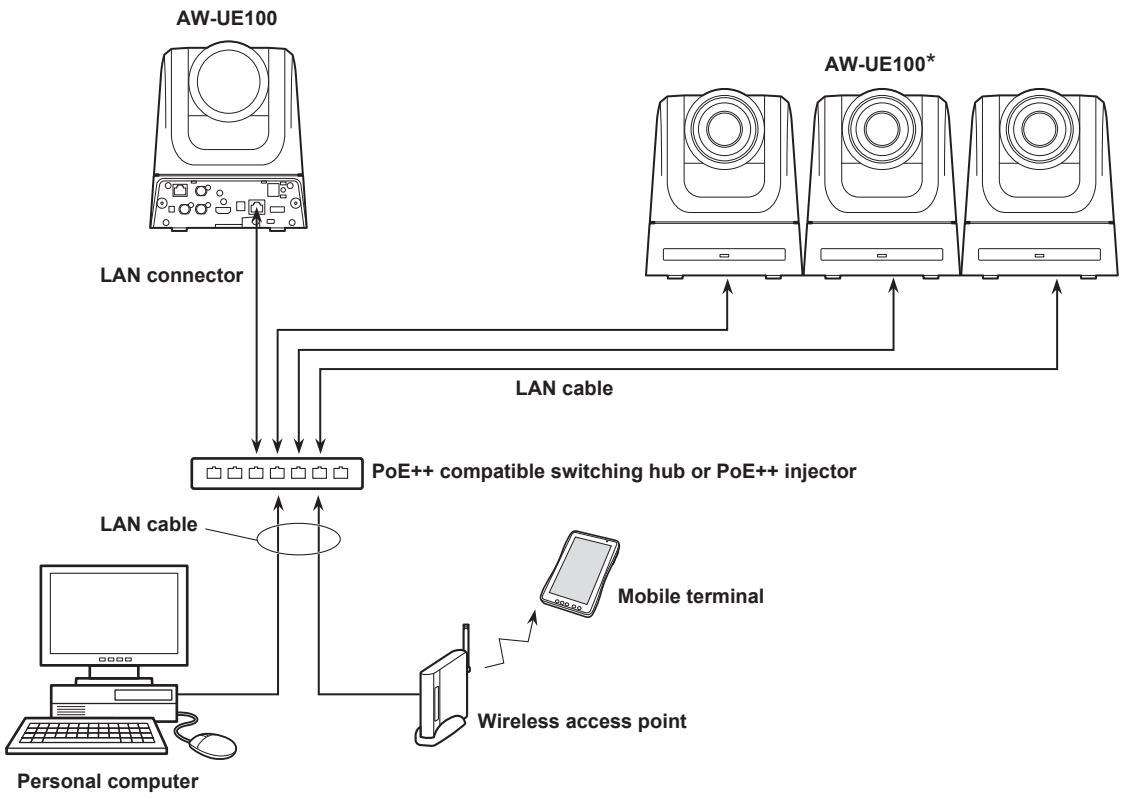

*: The AC adaptor provided with the unit is not shown in the above figure.

System example 4 (NDI)

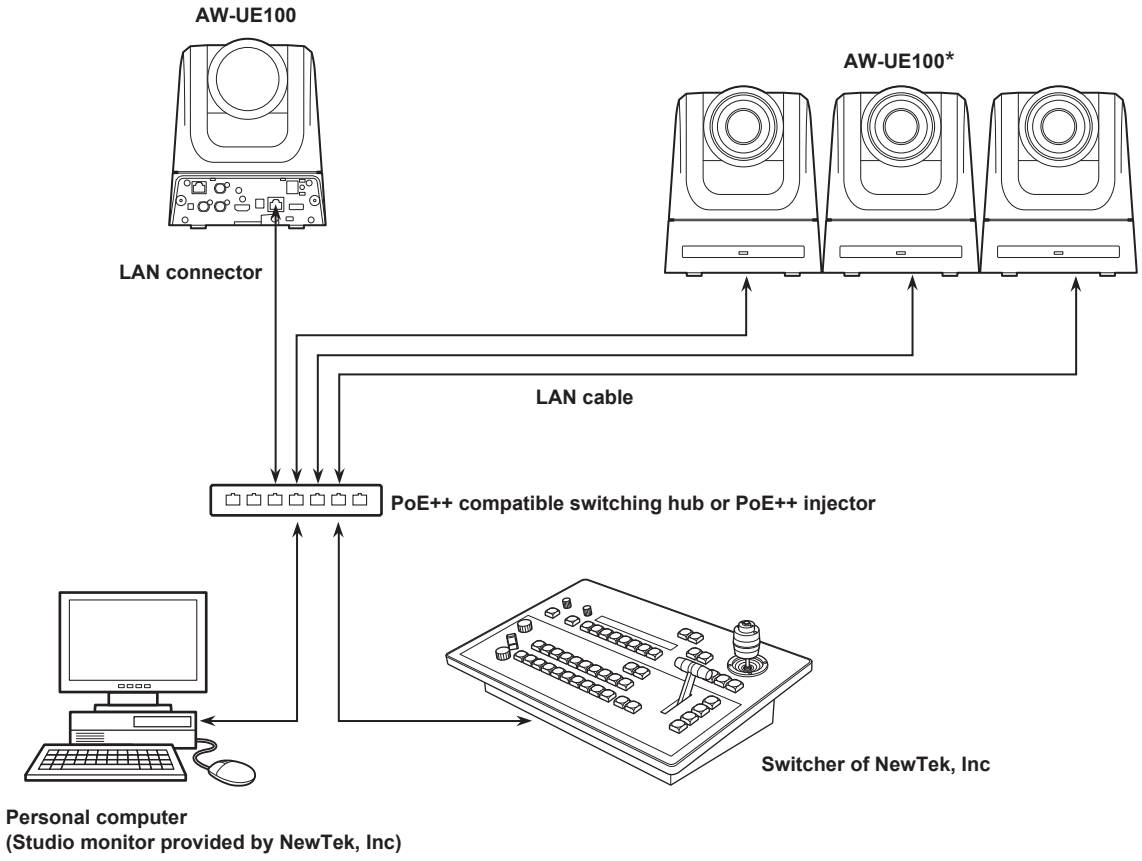

*: The AC adaptor provided with the unit is not shown in the above figure.

Appearance

Unit: mm (inch)

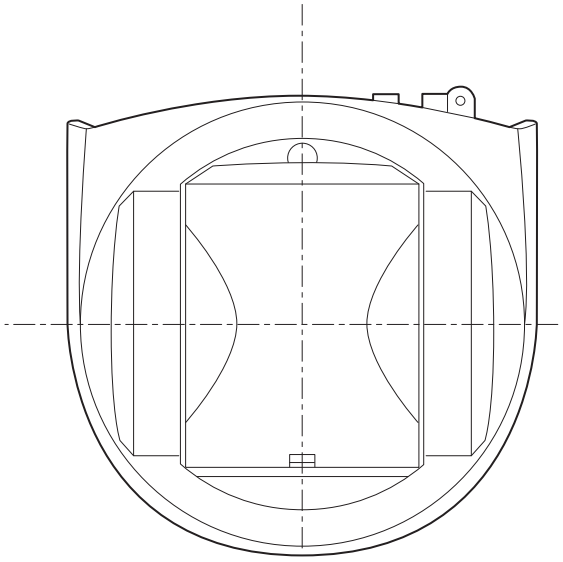

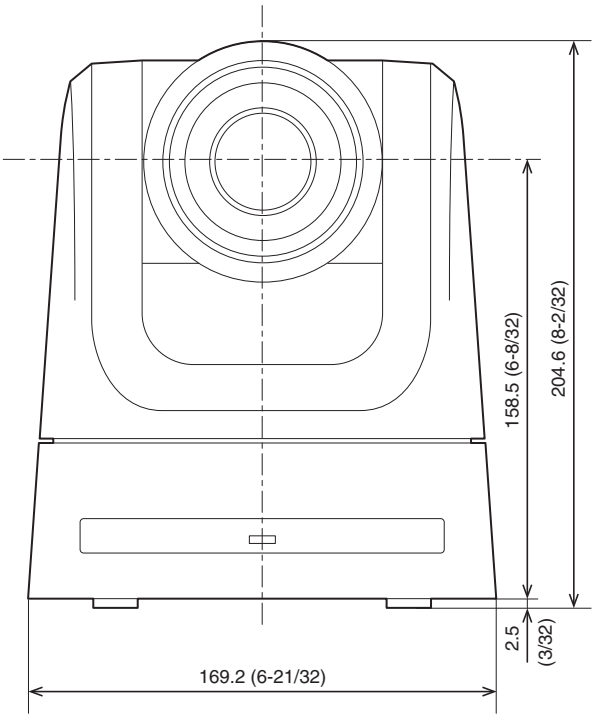

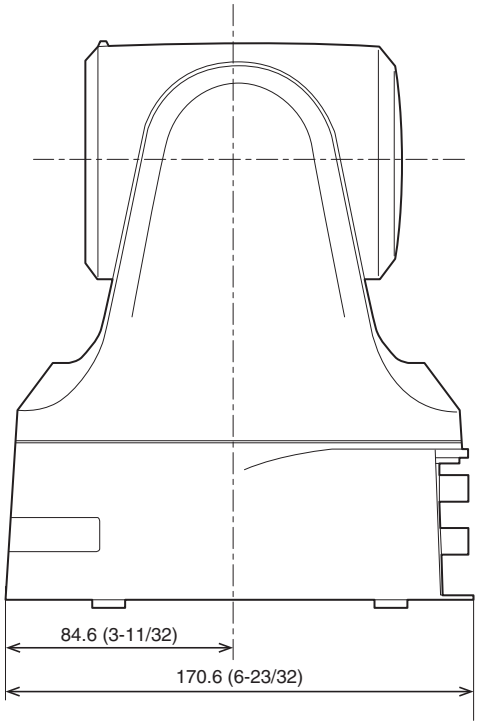

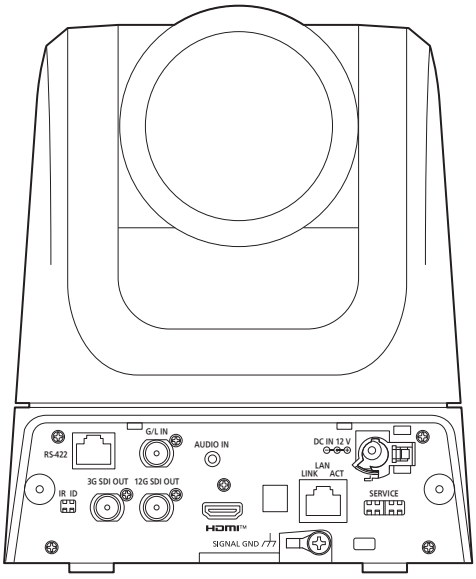

Rear panel view

Read this first! (For AW-UE100WPC, AW-UE100KPC)

WARNING:

- To reduce the risk of fire or electric shock, do not expose this equipment to rain or moisture.
- To reduce the risk of fire or electric shock, keep this equipment away from all liquids. Use and store only in locations which are not exposed to the risk of dripping or splashing liquids, and do not place any liquid containers on top of the equipment.

WARNING:

Always keep the main unit mounting screw, bracket mounting screws and drop-prevention wire mounting screw out of the reach of infants and small children.

WARNING:

Installation should only be performed by qualified installation personnel.
Improper installation may result in the entire apparatus falling down and causing injury.

CAUTION:

Do not remove panel covers by unscrewing.
To reduce the risk of electric shock, do not remove the covers.
No user serviceable parts inside.
Refer servicing to qualified service personnel.

CAUTION:

This apparatus can be operated at a voltage in the range of 100 – 240 V AC.
Voltages other than 120 V are not intended for U.S.A. and Canada.
Operation at a voltage other than 120 V AC may require the use of a different AC plug. Please contact either a local or foreign Panasonic authorized service center for assistance in selecting an alternate AC plug.

CAUTION:

The mains plug of the power supply cord shall remain readily operable.
The AC receptacle (mains socket outlet) shall be installed near the equipment and shall be easily accessible. To completely disconnect this equipment from the AC mains, disconnect the power cord plug from the AC receptacle.

CAUTION:

In order to maintain adequate ventilation, do not install or place this unit in a bookcase, built-in cabinet or any other confined space. To prevent risk of electric shock or fire hazard due to overheating, ensure that curtains and any other materials do not obstruct the ventilation.

CAUTION:

To reduce the risk of fire or electric shock and annoying interference, use the recommended accessories only.

CAUTION:

Check the installation at least once a year.
An improper installation could cause the unit to fall off resulting in personal injury.

CAUTION:

To reduce the risk of fire or electric shock caused by damage to the power supply cord, do not squeeze, bend, or pull the power supply cord when using the apparatus.

▭ indicates safety information.

FCC NOTICE (USA)

Supplier's Declaration of Conformity
Model Number: AW-UE100WPC/AW-UE100KPC
Trade Name: Panasonic
Responsible Party: Panasonic Corporation of North America
Two Riverfront Plaza, Newark, NJ 07102
Support contact: 1-800-524-1448

This device complies with part 15 of the FCC Rules.
Operation is subject to the following two conditions:
(1) This device may not cause harmful interference, and (2) this device must accept any interference received, including interference that may cause undesired operation.

FCC Note:
This equipment has been tested and found to comply with the limits for a class A digital device, pursuant to Part 15 of the FCC Rules.
These limits are designed to provide reasonable protection against harmful interference when the equipment is operated in a commercial environment. This equipment generates, uses, and can radiate radio frequency energy, and if not installed and used in accordance with the instruction manual, may cause harmful interference to radio communications. Operation of this equipment in a residential area is likely to cause harmful interference in which case the user will be required to correct the interference at his own expense.

Warning:
To assure continued FCC emission limit compliance, the user must use only shielded interface cables when connecting to external units. Also, any unauthorized changes or modifications to this equipment could void the user's authority to operate it.

indicates safety information.

NOTIFICATION (Canada)

CAN ICES-003 (A)/NMB-003(A)

The symbols on this product (including the accessories) represent the following:

∼	AC
⎓	DC

Read this first! (For AW-UE100WE, AW-UE100KE, AW-UE100WED, AW-UE100KED)

ENGLISH

WARNING:
- To reduce the risk of fire or electric shock, do not expose this equipment to rain or moisture.
- To reduce the risk of fire or electric shock, keep this equipment away from all liquids. Use and store only in locations which are not exposed to the risk of dripping or splashing liquids, and do not place any liquid containers on top of the equipment.

WARNING:
Always keep the main unit mounting screw, bracket mounting screws and drop-prevention wire mounting screw out of the reach of infants and small children.

WARNING:
This equipment is compliant with Class A of CISPR 32.
In a residential environment this equipment may cause radio interference.

WARNING:
Installation should only be performed by qualified installation personnel.
Improper installation may result in the entire apparatus falling down and causing injury.

CAUTION:
Do not remove panel covers by unscrewing.
To reduce the risk of electric shock, do not remove the covers.
No user serviceable parts inside.
Refer servicing to qualified service personnel.

CAUTION:
The mains plug of the power supply cord shall remain readily operable.
The AC receptacle (mains socket outlet) shall be installed near the equipment and shall be easily accessible. To completely disconnect this equipment from the AC mains, disconnect the power cord plug from the AC receptacle.

CAUTION:
In order to maintain adequate ventilation, do not install or place this unit in a bookcase, built-in cabinet or any other confined space. To prevent risk of electric shock or fire hazard due to overheating, ensure that curtains and any other materials do not obstruct the ventilation.

CAUTION:
To reduce the risk of fire or electric shock and annoying interference, use the recommended accessories only.

CAUTION:
Check the installation at least once a year.
An improper installation could cause the unit to fall off resulting in personal injury.

indicates safety information.

Caution for AC Mains Lead

FOR YOUR SAFETY PLEASE READ THE FOLLOWING TEXT CAREFULLY.
This product is equipped with 2 types of AC mains cable. One is for continental Europe, etc. and the other one is only for U.K.

Appropriate mains cable must be used in each local area, since the other type of mains cable is not suitable.

FOR CONTINENTAL EUROPE, ETC.
Not to be used in the U.K.

FOR U.K. ONLY
If the plug supplied is not suitable for your socket outlet, it should be cut off and appropriate one fitted.

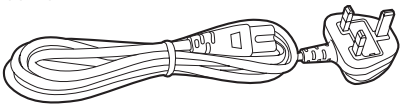

FOR U.K. ONLY

This appliance is supplied with a moulded three pin mains plug for your safety and convenience.
A 5 amp fuse is fitted in this plug.
Should the fuse need to be replaced please ensure that the replacement fuse has a rating of 5 amps and that it is approved by ASTA or BSI to BS1362.
Check for the ASTA mark or the BSI mark on the body of the fuse.

If the plug contains a removable fuse cover you must ensure that it is refitted when the fuse is replaced.
If you lose the fuse cover the plug must not be used until a replacement cover is obtained.
A replacement fuse cover can be purchased from your local Panasonic Dealer.

How to replace the fuse
1. Open the fuse compartment with a screwdriver.

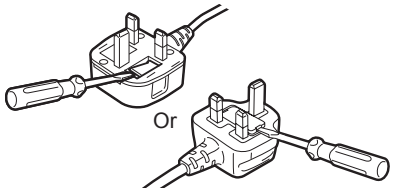

2. Replace the fuse.

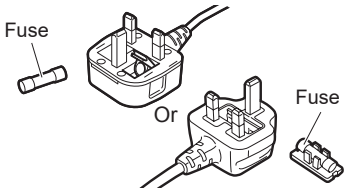

indicates safety information.

The symbols on this product (including the accessories) represent the following:

∿	AC
⎓	DC

Read this first! (For AW-UE100WE, AW-UE100KE)

EMC NOTICE FOR THE PURCHASER/USER OF THE APPARATUS

1. Pre-requisite conditions to achieving compliance with the above standards

<1> Peripheral equipment to be connected to the apparatus and special connecting cables

- The purchaser/user is urged to use only equipment which has been recommended by us as peripheral equipment to be connected to the apparatus.
- The purchaser/user is urged to use only the connecting cables described below.

<2> For the connecting cables, use shielded cables which suit the intended purpose of the apparatus.

- Video signal connecting cables
  Use double shielded coaxial cables, which are designed for 75-ohm type high-frequency applications, for SDI (Serial Digital Interface).
  Coaxial cables, which are designed for 75-ohm type high-frequency applications, are recommended for analog video signals.
- Audio signal connecting cables
  If your apparatus supports AES/EBU serial digital audio signals, use cables designed for AES/EBU.
  Use shielded cables, which provide quality performance for high-frequency transmission applications, for analog audio signals.
- Other connecting cables (IEEE1394, USB)
  Use double shielded cables, which provide quality performance for high-frequency applications, as connecting cables.
- When connecting to the DVI signal terminal, use a cable with a ferrite core.
- If your apparatus is supplied with ferrite core(s), they must be attached on cable(s) following instructions in this manual.

2. Performance level

The performance level of the apparatus is equivalent to or better than the performance level required by these standards.
However, the apparatus may be adversely affected by interference if it is being used in an EMC environment, such as an area where strong electromagnetic fields are generated (by the presence of signal transmission towers, cellular phones, etc.). In order to minimize the adverse effects of the interference on the apparatus in cases like this, it is recommended that the following steps be taken with the apparatus being affected and with its operating environment:

1. Place the apparatus at a distance from the source of the interference.
2. Change the direction of the apparatus.
3. Change the connection method used for the apparatus.
4. Connect the apparatus to another power outlet where the power is not shared by any other appliances.

Turkey Only
AEEE Yönetmeliğine Uygundur.
AEEE Complies with Directive of Turkey.

Disposal of Old Equipment
Only for European Union and countries with recycling systems
This symbol on the products, packaging, and/or accompanying documents means that used electrical and electronic products must not be mixed with general household waste.
For proper treatment, recovery and recycling of old products, please take them to applicable collection points in accordance with your national legislation.
By disposing of them correctly, you will help to save valuable resources and prevent any potential negative effects on human health and the environment. For more information about collection and recycling, please contact your local municipality, dealer or supplier.
Penalties may be applicable for incorrect disposal of this waste, in accordance with national legislation.

Manufactured by:
Panasonic Entertainment & Communication Co., Ltd.
1-10-12, Yagumo-higashi-machi, Moriguchi City, Osaka, Japan
Importer:
Panasonic Connect Europe GmbH
Hagenauer Strasse 43, 65203 Wiesbaden, Germany
Authorized Representative in EU:
Panasonic Connect Europe GmbH
Panasonic Testing Centre
Winsbergring 15, 22525 Hamburg, Germany

Importer for UK:
Panasonic Connect UK,
a branch of Panasonic Connect Europe GmbH,
Maxis 2, Western Road, Bracknell, Berkshire, RG12 1RT

Інформація для покупця

Виробник:	**Panasonic Entertainment & Communication Co., Ltd.**	**Панасонік Ентертейнмент енд Коммюнікейшн Ко., Лтд.**
Адреса виробника:	**Moriguchi, Osaka, Japan**	**Моріґучі Осака Японія**
Країна походження:	**Japan/China**	**Японія/Китай**

Імпортер:	**ТОВ "ПАНАСОНІК УКРАЇНА ЛТД"**
Адреса імпортера:	**вул. Васильківська, буд. 30, м. Київ 03022, Україна**

Примітки:

Термін служби виробу	**7 років**

Дата виготовлення може бути визначена за допомогою комбінації літер та цифр серійного номера, розташованого на продукті.

Приклад: X X XXXXXXX

Рік: остання цифра року (7 – 2017, 8 – 2018,…0 – 2020)
Місяць: A – Січень, B – Лютий… L – Грудень

Information for Users in India

Information on hazardous constituents as specified in the E-Waste (Management) Rules in electrical and electronic equipment.
Declaration of Conformity with the requirements of the E-Waste (Management) Rules limits with respect to Lead, Mercury, Cadmium, Hexavalent chromium, Polybrominated biphenyls,Polybrominated diphenyl ethers.
The content of hazardous substance with the exemption of the applications listed in the E-Waste (Management) Rules:
1. Lead (Pb) – not over 0.1% by weight.
2. Cadmium (Cd) – not over 0.01% by weight.
3. Mercury (Hg) – not over 0.1% by weight.
4. Hexavalent chromium (Cr6+) – not over 0.1% by weight.
5. Polybrominated biphenyls (PBBs) – not over 0.1% by weight.
6. Polybrominated diphenyl ethers (PBDEs) – not over 0.1% by weight.

For the purpose of recycling to facilitate effective utilization of resources, please return this product to a nearby authorized collection center, registered dismantler of recycler, or Panasonic service center when disposing of this product.
Customer care number (Toll free) : 1800 103 1333 ,1800 108 1333
Please see the Panasonic website for further information on collection centers, etc. or call the customer care toll-free number.
https://www.panasonic.com/in/corporate/e-waste-management.html

Do’s & Don’ts		
No.	Do’s	Don’ts
1	All electrical and electronic products are required to be handed over only to the Authorized recycler.	The product should not be opened by the user himself / herself, but only by authorized service personnel.
2	The product should be handed over only to authorized recycler for disposal.	The product is not meant for re-sale to any unauthorized agencies / scrap dealers / kabariwalas.
3	Keep the product in an isolated area, after it becomes non-functional / unrepairable so as to prevent its accidental breakage.	The product is not meant for mixing into household waste stream.
4	Refer to Operating Instructions for handling of end of life products.	Do not keep any replaced spare part(s) from the product in an exposed area.
5	Always dispose of products that have reached end of life at Panasonic Life Solutions India Authorized Service Centre.	Do not donate old electronic items to anybody. Do not dispose of your product in garbage bins along with municipal waste that ultimately reaches landfill.
6	Wherever possible or as instructed, separate the packaging material according to responsible waste disposal options and sorting for recycling.	Do not give e-waste to informal and unorganized sectors like Local Scrap Dealers / Rag Pickers.

Lire ces informations en premier ! (Pour AW-UE100WPC, AW-UE100KPC)

AVERTISSEMENT:

- Pour réduire les risques d'incendie ou de choc électrique, évitez d'exposer cet appareil à la pluie ou à l'humidité.
- Pour réduire tout risque de feu ou de choc électrique, éloigner l'appareil des liquides — utiliser et ranger uniquement dans un endroitne risquant pas de recevoir des gouttes ou d'être aspergé de liquides, et ne pas mettre de récipient renfermant des liquides sur le dessus de l'appareil.

AVERTISSEMENT:

Gardez toujours la vis de montage de l'appareil principal, celles de montage de la potence et celle de montage du fil antichute hors de portée des enfants et des nourissons.

AVERTISSEMENT:

L'installation ne doit être effectuée que par du personnel d'installation qualifié.
Une mauvaise installation peut avoir pour conséquence la chute de l'appareil et provoquer des blessures.

ATTENTION:

Ne pas dévisser le couvercle.
Pour réduire tout risque d'électrocution, ne pas retirer le couvercle. Il ne se trouve à l'intérieur aucune pièce qui puisse être réparée par l'utilisateur.
Confier toute réparation à un personnel qualifié.

ATTENTION:

Cet appareil peut être mis en service sur la tension d'une plage de 100 – 240 V C.A.
Le réglage autre que à 120 V C.A. n'est pas prévu pour utilisation au Canada ou aux États-Unis d'Amérique.
L'utilisation d'une tension de secteur autre que à 120 V C.A. peut exiger une fiche différente. Consulter un centre de service Panasonic authrisé local ou à l'etranger pour le choix de l'adaptateur approprié.

ATTENTION:

La fiche du cordon d'alimentation doit être facilement accessible.
La prise de courant (prise secteur) doit être installée à proximité de l'appareil et facilement accessible.
Pour déconnecter complètement cet appareil du secteur, débranchez la fiche du cordon d'alimentation de la prise de courant.

ATTENTION:

Pour maintenir une bonne ventilation, ne pas installer ni placer l'appareil dans une étagère, un meuble encastré ni aucun endroit confiné.
Pour éviter tout risque de choc électrique ou de feu dû à une surchauffe, vérifier qu'aucun rideau ni aucun autre matériau ne fait obstacle à la ventilation.

ATTENTION:

Pour éviter tout risque d'incendie, de chocs électriques ou d'interférences, n'utiliser que les accessoires recommandés.

ATTENTION:

Vérifiez l'installation au moins une fois par an.
Une mauvaise installation peut provoquer la chute de l'appareil et engendrer des blessures.

ATTENTION:

Pour réduire les risques d'incendie ou d'électrocution qui pourraient être causés par un cordon d'alimentation endommagé, ne pas écraser, plier ou tirer sur ce dernier lors de l'utilisation de l'appareillage.

Informations concernant la sécurité.

NOTIFICATION (Canada)

CAN ICES-003 (A)/NMB-003(A)

Les symboles présents sur ce produit (y compris sur les accessoires) signifient les choses suivantes.

∼	CA
⎓	CC

Lire ces informations en premier ! (Pour AW-UE100WE, AW-UE100KE)

FRANÇAIS

AVERTISSEMENT:

- Pour réduire les risques d'incendie ou de choc électrique, évitez d'exposer cet appareil à la pluie ou à l'humidité.
- Pour réduire tout risque de feu ou de choc électrique, éloigner l'appareil des liquides — utiliser et ranger uniquement dans un endroitne risquant pas de recevoir des gouttes ou d'être aspergé de liquides, et ne pas mettre de récipient renfermant des liquides sur le dessus de l'appareil.

AVERTISSEMENT:

Gardez toujours la vis de montage de l'appareil principal, celles de montage de la potence et celle de montage du fil antichute hors de portée des enfants et des nourissons.

AVERTISSEMENT:

Cet équipement est conforme à la Classe A de la norme CISPR 32. Dans un environnement résidentiel, cet équipement peut produire des interférences radio.

AVERTISSEMENT:

L'installation ne doit être effectuée que par du personnel d'installation qualifié.
Une mauvaise installation peut avoir pour conséquence la chute de l'appareil et provoquer des blessures.

ATTENTION:

Ne pas dévisser le couvercle.
Pour réduire tout risque d'électrocution, ne pas retirer le couvercle. Il ne se trouve à l'intérieur aucune pièce qui puisse être réparée par l'utilisateur.
Confier toute réparation à un personnel qualifié.

ATTENTION:

La fiche du cordon d'alimentation doit être facilement accessible.
La prise de courant (prise secteur) doit être installée à proximité de l'appareil et facilement accessible.
Pour déconnecter complètement cet appareil du secteur, débranchez la fiche du cordon d'alimentation de la prise de courant.

ATTENTION:

Pour maintenir une bonne ventilation, ne pas installer ni placer l'appareil dans une étagère, un meuble encastré ni aucun endroit confiné.
Pour éviter tout risque de choc électrique ou de feu dû à une surchauffe, vérifier qu'aucun rideau ni aucun autre matériau ne fait obstacle à la ventilation.

ATTENTION:

Pour éviter tout risque d'incendie, de chocs électriques ou d'interférences, n'utiliser que les accessoires recommandés.

ATTENTION:

Vérifiez l'installation au moins une fois par an.
Une mauvaise installation peut provoquer la chute de l'appareil et engendrer des blessures.

Informations concernant la sécurité.

Avertissement concernant le cordon d'alimentation

POUR VOTRE PROPRE SÉCURITÉ, VEUILLEZ LIRE ATTENTIVEMENT LE TEXTE SUIVANT.
Cet appareil est équipé de 2 types de cordon d'alimentation. L'un est pour l'Europe continentale, etc., l'autre pour le Royaume-Uni exclusivement.

Dans chacune des régions respectives, le cordon d'alimentation adéquat doit être utilisé; l'utilisation de l'autre cordon n'étant pas possible.

POUR L'EUROPE CONTINENTALE, ETC.	POUR LE ROYAUME-UNI EXCLUSIVEMENT
Ne doit pas être utilisé au Royaume-Uni.	
	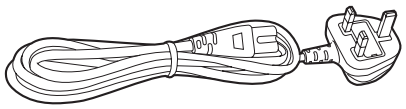

Informations concernant la sécurité.

NOTE D'INFORMATION SUR LA CEM POUR L'ACHETEUR/UTILISATEUR DE L'APPAREIL

1. Conditions requises pour obtenir la conformité aux normes ci-dessus

<1> Equipements périphériques à connecter à l'appareil et câbles de connexion spéciaux

- L'acheteur/utilisateur est invité à utiliser uniquement des équipements recommandés par notre société comme équipements périphériques à connecter à l'appareil.
- L'acheteur/utilisateur est invité à n'utiliser que les câbles de connexion décrits ci-dessous.

<2> Pour les câbles de connexion, utilisez des câbles blindés appropriés à l'utilisation de l'appareil.

- Câbles de connexion signal vidéo
  Utilisez des câbles coaxiaux blindés, conçus pour des applications à haute fréquence du type 75 ohms, pour la SDI (Serial Digital Interface).
  Les câbles coaxiaux, conçus pour des applications à haute fréquence du type 75 ohms, sont conseillés pour les signaux vidéo analogiques.
- Câbles de connexion signal audio
  Si votre appareil prend en charge les signaux audio numériques série AES/EBU, utilisez des câbles conçus pour AES/EBU.
  Utilisez des câbles blindés, qui assure des performances de qualité pour les applications de transmission haute fréquence, pour les signaux audio analogiques.
- Autres câbles de connexion (IEEE1394, USB)
  Utilisez des câbles blindés, qui assurent des performances de qualité pour les applications haute fréquence, comme des câbles de connexion.
- Lors du raccordement à la borne de signal DVI, utilisez un câble avec un noyau de ferrite.
- Si votre appareil est fourni avec un ou plusieurs tore(s) magnétique(s), ils doivent être fixés sur le(s) câble(s) selon les instructions figurant dans la présent manuel.

2. Niveau de performance

Le niveau de performance de l'appareil est équivalent ou supérieur au niveau de performance requis par les normes en question.
Cependant, l'appareil pourrait être affecté de façon négative par des interférences s'il est utilisé dans un environnement CEM, tel qu'une zone où de forts champs électromagnétiques sont générés (par la présence de pylônes de transmission, téléphones portables etc.). Pour réduire au minimum les effets négatifs des interférences sur l'appareil dans des cas de ce genre, il est conseillé d'adopter les mesures suivantes en ce qui concerne l'appareil concerné et son environnement de fonctionnement:

1. Placez l'appareil à une certaine distance de la sources des interférences.
2. Changez la direction de l'appareil.
3. Changez la méthode de connexion utilisée pour l'appareil.
4. Connectez l'appareil à une autre prise électrique sur laquelle l'alimentation n'est partagée par aucun autre appareil.

L'élimination des équipements usagés
Applicable uniquement dans les pays membres de l'Union européenne et les pays disposant de systèmes de recyclage.

Apposé sur le produit lui-même, sur son emballage, ou figurant dans la documentation qui l'accompagne, ce pictogramme indique que appareils électriques et électroniques usagés, doivent être séparées des ordures ménagères.
Afin de permettre le traitement, la valorisation et le recyclage adéquats des appareils usagés, veuillez les porter à l'un des points de collecte prévus, conformément à la législation nationale en vigueur.
En les éliminant conformément à la réglementation en vigueur, vous contribuez à éviter le gaspillage de ressources précieuses ainsi qu'à protéger la santé humaine et l'environnement. Pour de plus amples renseignements sur la collecte et le recyclage, veuillez vous renseigner auprès des collectivités locales, votre revendeur ou fournisseur.
Le non-respect de la réglementation relative à l'élimination des déchets est passible d'une peine d'amende.

Les symboles présents sur ce produit (y compris sur les accessoires) signifient les choses suivantes.

∼	CA
⎓	CC

Fabriqué par:
Panasonic Entertainment & Communication Co., Ltd.
1-10-12, Yagumo-higashi-machi, ville de Moriguchi, Osaka, Japon
Importateur :
Panasonic Connect Europe GmbH
Hagenauer Strasse 43, 65203 Wiesbaden, Allemagne
Représentant autorisé dans l'UE :
Panasonic Connect Europe GmbH
Panasonic Testing Centre
Winsbergring 15, 22525 Hambourg, Allemagne

Lea esto primero! (Para AW-UE100WPC, AW-UE100KPC)

ADVERTENCIA:

- Para reducir el riesgo de producir un incendio o recibir una descarga eléctrica, no exponga este equipo a la lluvia ni a la humedad.
- Para reducir el riesgo de incendio o sacudida eléctrica, mantenga este equipo alejado de todos los líquidos. Utilícelo y guárdelo solamente en lugares donde no corra el riesgo de que le caigan gotas o le salpiquen líquidos, y no coloque ningún recipiente de líquidos encima del equipo.

ADVERTENCIA:

Mantenga siempre el tornillo de montaje de la unidad, los tornillos de montaje de la ménsula y el tornillo de montaje del cable para evitar caídas fuera del alcance de los niños y bebés.

ADVERTENCIA:

La instalación solamente debe llevarla a cabo personal cualificado.
Una instalación incorrecta podría provocar la caída del dispositivo y causar lesiones.

PRECAUCIÓN:

No quite la cubierta desatornillándola.
No quite la tapa para evitar el riesgo de sacudidas eléctricas.
Las piezas del interior no requieren mantenimiento por parte del usuario.
Solicite las reparaciones al personal de servicio calificado.

PRECAUCIÓN:

Este aparato puede funcionar con una tensión de entre 100 – 240 V CA.
Las tensiones diferentes de 120 V no son adecuadas para los EE.UU. y Canadá.
El funcionamiento con una tensión diferente de 120 V CA puede requerir la utilización de una clavija de CA diferente.
Póngase en contacto con un centro de servicio autorizado por Panasonic, bien sea local o del extranjero, para que le ayude en la selección de una clavija de CA alternativa.

PRECAUCIÓN:

El enchufe del cable de la alimentación deberá poder conectarse y desconectarse fácilmente.
La toma de ca (toma de la red) deberá estar cerca del equipo y a ella podrá accederse fácilmente.
Para desconectar completamente el equipo de la red, desconecte el cable de alimentación de la toma de red.

PRECAUCIÓN:

Para mantener unas buenas condiciones de ventilación, no instale ni ponga este aparato en una librería, mueble empotrado u otro espacio reducido. Para evitar el riesgo de que se produzcan sacudidas eléctricas o peligros de incendio debidos al recalentamiento, asegúrese de que las cortinas y otros materiales no obstruyan la ventilación.

PRECAUCIÓN:

Para reducir el riesgo de incendios, sacudidas eléctricas e interferencias molestas, utilice solamente los accesorios recomendados.

PRECAUCIÓN:

Compruebe la instalación al menos una vez al año.
Una instalación incorrecta podría provocar la caída de la unidad, lo cual podría causar lesiones al usuario.

PRECAUCIÓN:

Para reducir el riesgo de incendio o descarga eléctrica causado por daños en el cable de alimentación, no apriete, doble o tire del cable de alimentación cuando utilice el aparato.

▭ indica información de seguridad.

Los símbolos en este producto (incluidos los accesorios) representan lo siguiente.

∼	CA
⎓	CC

Lea esto primero! (Para AW-UE100WE, AW-UE100KE)

ADVERTENCIA:
- Para reducir el riesgo de producir un incendio o recibir una descarga eléctrica, no exponga este equipo a la lluvia ni a la humedad.
- Para reducir el riesgo de incendio o sacudida eléctrica, mantenga este equipo alejado de todos los líquidos. Utilícelo y guárdelo solamente en lugares donde no corra el riesgo de que le caigan gotas o le salpiquen líquidos, y no coloque ningún recipiente de líquidos encima del equipo.

ADVERTENCIA:
Mantenga siempre el tornillo de montaje de la unidad, los tornillos de montaje de la ménsula y el tornillo de montaje del cable para evitar caídas fuera del alcance de los niños y bebés.

ADVERTENCIA:
Este equipo se ajusta a los requisitos de la Clase A de CISPR 32. Este equipo puede causar interferencias por radio en un entorno residencial.

ADVERTENCIA:
La instalación solamente debe llevarla a cabo personal cualificado.
Una instalación incorrecta podría provocar la caída del dispositivo y causar lesiones.

PRECAUCIÓN:
El enchufe del cable de la alimentación deberá poder conectarse y desconectarse fácilmente.
La toma de ca (toma de la red) deberá estar cerca del equipo y a ella podrá accederse fácilmente.
Para desconectar completamente el equipo de la red, desconecte el cable de alimentación de la toma de red.

PRECAUCIÓN:
No quite la cubierta desatornillándola.
No quite la tapa para evitar el riesgo de sacudidas eléctricas.
Las piezas del interior no requieren mantenimiento por parte del usuario.
Solicite las reparaciones al personal de servicio calificado.

PRECAUCIÓN:
Para mantener unas buenas condiciones de ventilación, no instale ni ponga este aparato en una librería, mueble empotrado u otro espacio reducido. Para evitar el riesgo de que se produzcan sacudidas eléctricas o peligros de incendio debidos al recalentamiento, asegúrese de que las cortinas y otros materiales no obstruyan la ventilación.

PRECAUCIÓN:
Para reducir el riesgo de incendios, sacudidas eléctricas e interferencias molestas, utilice solamente los accesorios recomendados.

PRECAUCIÓN:
Compruebe la instalación al menos una vez al año.
Una instalación incorrecta podría provocar la caída de la unidad, lo cual podría causar lesiones al usuario.

indica información de seguridad.

Aviso para el cable de alimentación de CA

PARA SU SEGURIDAD, LEA CUIDADOSAMENTE LO SIGUIENTE.
Este producto está equipado con 2 tipos de cable de alimentación de CA. Uno es para Europa continental, etc. y el otro es para el Reino Unido solamente.

En cada una de las zonas deberá utilizarse el cable de alimentación apropiado, ya que el otro tipo de cable no es adecuado para ello.

PARA EUROPA CONTINENTAL, ETC.	PARA EL REINO UNIDO SOLAMENTE
No debe utilizarse en el Reino Unido.	
	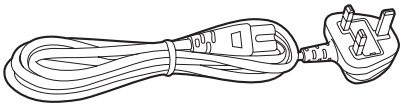

indica información de seguridad.

AVISO SOBRE CEM PARA EL COMPRADOR/USUARIO DEL APARATO

1. Condiciones previas para conseguir la conformidad con las normas mencionadas

<1> Equipo periférico por conectar al aparato y cables de conexión especiales

- Se recomienda que el comprador/usuario utilice solo equipos recomendados por nosotros como equipos periféricos que se pueden conectar al aparato.
- Se recomienda que el comprador/usuario utilice solo los cables de conexión descritos más abajo.

<2> Para los cables de conexión, utilizar cables apantallados que se ajusten al destino del aparato.

- Cables de conexión de señales de vídeo
  Utilizar cables coaxiales apantallados dobles, diseñados para aplicaciones de alta frecuencia del tipo de 75 ohm, para SDI (Interfaz digital en serie).
  Cables coaxiales, diseñados para aplicaciones de alta frecuencia del tipo de 75 ohm, están recomendados para señales de vídeo analógicas.
- Cables de conexión de señales de audio
  Si el aparato es compatible con las señales de audio digitales en serie AES/EBU, utilizar cables diseñados para AES/EBU.
  Utilizar cables apantallados, que proporcionan un rendimiento de calidad para aplicaciones de transmisión en alta frecuencia, para señales de audio analógicas.
- Otros cables de conexión (IEEE1394, USB)
  Utilizar cables apantallados, que proporcionan un rendimiento de calidad para aplicaciones de transmisión en alta frecuencia, como cables de conexión.
- Para conectar el terminal de señales DVI, utilice un cable con un núcleo de ferrita.
- Si el aparato está equipado con núcleo(s) de ferrita, tiene que conectarse al cable(s) siguiendo las instrucciones contenidas en este manual.

2. Nivel de rendimiento

El nivel de rendimiento del aparato es equivalente a o mejor respecto al nivel de rendimiento requerido por estas normas.
Sin embargo, el aparato puede quedar perjudicado por las interferencias si se está utilizando en un ambiente CEM, como una zona donde haya fuertes campos electromagnéticos (generados por la presencia de torres de transmisión de señales, teléfonos móviles, etc.). Para minimizar los efectos negativos de la interferencia en el aparato en casos como éste, se recomienda llevar a cabo las siguientes operaciones en el aparato afectado y en su ambiente de funcionamiento.

1. Colocar el aparato a cierta distancia de la fuente de la interferencia:
2. Cambiar de dirección el aparato.
3. Cambiar el método de conexión utilizado para el aparato.
4. Conectar el aparato a otra toma de corriente que no comparta su energía con otros dispositivos.

Eliminación de Aparatos Viejos
Solamente para la Unión Europea y países con sistemas de reciclado.

Este símbolo en los productos, su embalaje o en los documentos que los acompañen significa que los productos eléctricos y electrónicos usadas no deben mezclarse con los residuos domésticos.
Para el adecuado tratamiento, recuperación y reciclaje de los productos viejos llévelos a los puntos de recogida de acuerdo con su legislación nacional.
Si los elimina correctamente ayudará a preservar valuosos recursos y evitará potenciales efectos negativos sobre la salud de las personas y sobre el medio ambiente. Para más información sobre la recogida o reciclaje, por favor contacte con su ayuntamiento, su distribuidor o su proveedor.
Puede haber sanciones por una incorrecta eliminación de este residuo, de acuerdo con la legislación nacional.

Los símbolos en este producto (incluidos los accesorios) representan lo siguiente.

∼	CA
⎓	CC

Fabricado por:
Panasonic Entertainment & Communication Co., Ltd.
1-10-12, Yagumo-higashi-machi, Ciudad de Moriguchi, Osaka, Japón
Importador:
Panasonic Connect Europe GmbH
Hagenauer Strasse 43, 65203 Wiesbaden, Alemania
Representante Autorizado para la UE:
Panasonic Connect Europe GmbH
Panasonic Testing Centre
Winsbergring 15, 22525 Hamburgo, Alemania

Bitte lesen Sie zuerst diesen Hinweis! (Für AW-UE100WE, AW-UE100KE)

WARNUNG:

- Zur Reduzierung der Gefahr von Brand und elektrischem Schlag dieses Gerät weder Nässe noch Feuchtigkeit aussetzen.
- Um Brand- oder Stromschlaggefahr zu reduzieren, muss dieses Gerät von allen Flüssigkeiten ferngehalten werden. Vermeiden sie Gebrauch und Lagerung des Gerätes an Orten, an denen die Gefahr besteht, dass es mit Flüssigkeiten betropft oder bespritzt wird, und stellen sie keine Flüssigkeitsbehälter auf das Gerät.

WARNUNG:

Bewahren Sie die Haupteinheit-Befestigungsschrauben, die Halterungs-Befestigungsschrauben und die Befestigungsschraube für Fallschutzdraht stets außer Reichweite von Säuglingen und Kleinkindern auf.

WARNUNG:

Dieses Gerät entspricht Klasse A der CISPR 32. In einem Wohnbereich kann dieses Gerät Funkstörungen verursachen.

WARNUNG:

Die Installation darf nur durch qualifiziertes Personal ausgeführt werden.
Fehlerhafte Installation kann zum Herunterfallen des Gerätes und zu Verletzungen führen.

VORSICHT:

Öffnen Sie nicht das Gerät durch Abschrauben von Gehäuseteilen.
Zur Vermeidung von elektrischem Schlag darf das Gehäuse nicht geöffnet werden. Im Geräteinneren befinden sich keine Teile, die vom Benutzer gewartet werden können.
Wartungs- und Reparaturarbeiten grundsätzlich autorisiertem Kundendienstpersonal überlassen.

VORSICHT:

Ein unbehinderter zugang zum Netzstecker des Netzkabels muss jederzeit gewährleistet sein.
Die Steckdose (Netzsteckdose) sollte in der nähe des Gerätes installiert werden und leicht zugänglich sein.
Um dieses Gerät vollständig vom Nets zu trennen, den Netzstecker aus der Netzsteckdose ziehen.

VORSICHT:

Um eine ausreichende Belüftung zu gewährleisten, dieses Gerät nicht in einem Bücherregal, Einbauschrank oder an einem anderen engen Platz aufstellen. Sicherstellen, dass die Ventilationsöffnungen im Gehäuse nicht durch Vorhänge oder andere Materialien blockiert werden; anderenfalls besteht die Gefahr von elektrischem Schlag oder Feuer aufgrund von Überhitzung.

VORSICHT:

Nur das empfohlene Zubehör verwenden, um die Gefahr von Feuer und elektrischem Schlag sowie Störungen auszuschalten.

VORSICHT:

Die Installation ist mindestens einmal jährlich zu überprüfen.
Bei fehlerhafter Installation besteht Verletzungsgefahr durch Herunterfallen des Gerätes.

▭ ist die Sicherheitsinformation.

Vorsichtshinweis zum Netzkabel

BITTE LESEN SIE IM INTERESSE IHRER SICHERHEIT DEN FOLGENDEN TEXT AUFMERKSAM DURCH.
Dieses Gerät wird mit Netzkabeln in zwei verschiedenen Ausführungen geliefert. Ein Netzkabel ist für Kontinentaleuropa usw., das andere ausschließlich für Großbritannien bestimmt.

Bitte achten Sie unbedingt darauf, das für das jeweilige Bestimmungsgebiet vorgesehene Netzkabel zu verwenden, da die andere Ausführung nicht für Ihr Land geeignet ist.

FÜR KONTINENTALEUROPA USW.

Nicht für den Gebrauch in Großbritannien bestimmt.

NUR FÜR GROSSBRITANNIEN

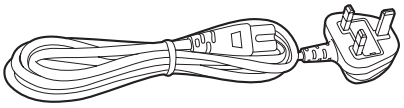

▭ ist die Sicherheitsinformation.

EMV-HINWEIS FÜR DEN KÄUFER/ANWENDER DES GERÄTS

1. Erforderliche Bedingungen zur Einhaltung der oben genannten Standards

<1> An das Gerät angeschlossene Geräte und spezielle Verbindungskabel

- Der Käufer/Anwender sollte nur Geräte verwenden, die von uns als Zusatzgeräte für den Anschluss an das Gerät empfohlen wurden.
- Der Käufer/Anwender sollte nur die unten aufgeführten Verbindungskabel verwenden.

<2> Für den Anschluss abgeschirmte Kabel verwenden, die dem Gerätezweck entsprechen

- Videokabel
  Für SDI (Serial Digital Interface) doppelt abgeschirmte 75-Ohm HF-Koaxialkabel verwenden.
  Für analoge Videosignale werden 75-Ohm HF-Koaxialkabel empfohlen.
- Audiokabel
  Verwenden Sie Kabel für AES/EBU, wenn Ihr Gerät serielle digitale AES/EBU-Audiosignale unterstützt.
  Verwenden Sie für analoge Audiosignale abgeschirmte Kabel für hochwertige HF-Übertragungen.
- Weitere Kabel (IEEE1394, USB)
  Verwenden Sie abgeschirmte Kabel für hochwertige HF-Anwendungen.
- Für die Verbindung zum DVI-Signalanschluss muss ein Kabel mit Ferritkern verwendet werden.
- Wird Ihr Gerät mit Ferritkernen geliefert, müssen diese an den Kabeln befestigt werden, siehe Angaben in dieser Anleitung.

2. Leistungsniveau

Das Leistungsniveau des Geräts entspricht oder übersteigt das von diesen Standards verlangte Leistungsniveau.
Das Gerät kann aber durch Nutzung in einer EMV-Umgebung, wie Bereichen mit starken elektromagnetischen Feldern (durch Sendemasten, Mobiltelefone etc.) störend beeinflusst werden.
Um in diesen Situationen die störenden Einflüsse auf das Gerät zu minimieren wird empfohlen, folgende Schritte für betroffene Geräte und Betriebsumgebungen durchzuführen:

1. Positionieren Sie das Gerät von der Störquelle entfernt.
2. Ändern Sie die Geräterichtung.
3. Ändern Sie die Anschlussmethode des Geräts.
4. Schließen Sie das Gerät an eine andere Stromverbindung, die mit keinen weiteren Geräten geteilt wird.

Entsorgung von Altgeräten
Nur für die Europäische Union und Länder mit Recyclingsystemen

Dieses Symbol, auf den Produkten, der Verpackung und/oder den Begleitdokumenten, bedeutet, dass gebrauchte elektrische und elektronische Produkte nicht in den allgemeinen Hausmüll gegeben werden dürfen.
Bitte führen Sie alte Produkte zur Behandlung, Aufarbeitung bzw. zum Recycling gemäß den gesetzlichen Bestimmungen den zuständigen Sammelpunkten zu.
Indem Sie diese Produkte ordnungsgemäß entsorgen, helfen Sie dabei, wertvolle Ressourcen zu schützen und eventuelle negative Auswirkungen auf die menschliche Gesundheit und die Umwelt zu vermeiden. Für mehr Informationen zu Sammlung und Recycling, wenden Sie sich bitte an Ihren örtlichen Abfallentsorgungsdienstleister, Händler oder Zulieferer.
Gemäß Landesvorschriften können wegen nicht ordnungsgemäßer Entsorgung dieses Abfalls Strafgelder verhängt werden.

Die Symbole an diesem Produkt (einschließlich Zubehör) haben die folgenden Bedeutungen.

∼	Wechselstrom
⎓	Gleichstrom

Hergestellt von:
Panasonic Entertainment & Communication Co., Ltd.
1-10-12, Yagumo-higashi-machi, Moriguchi City, Osaka, Japan
Importeur:
Panasonic Connect Europe GmbH
Hagenauer Strasse 43, 65203 Wiesbaden, Deutschland
Vertretungsberechtigter in der EU:
Panasonic Connect Europe GmbH
Panasonic Testing Centre
Winsbergring 15, 22525 Hamburg, Deutschland

Leggere prima quanto segue! (Per AW-UE100WE, AW-UE100KE)

AVVISO:
- Per ridurre il rischio d'incendio o di scosse, non esporre questo prodotto alla pioggia o all'umidità.
- Per ridurre il rischio d'incendio o di scosse elettriche, tenere questo prodotto lontano da tutti i liquidi. Usarlo e conservarlo soltanto in luoghi che non siano esposti a gocciolamenti o spruzzi di liquidi, e non mettervi sopra recipienti di liquidi.

AVVISO:
Mantenere sempre la vite di montaggio dell'unità principale, le viti di montaggio staffa e la vite di montaggio del cavo anticaduta lontano dalla portata dei bambini.

AVVISO:
Questa apparecchiatura è conforme alla Classe A della CISPR 32. In un ambiente di tipo residenziale questa apparecchiatura potrebbe provocare interferenze radio.

AVVISO:
L'installazione deve essere realizzata unicamente da tecnici qualificati.
Un'installazione incorretta può risultare nella caduta dell'apparecchio con conseguenti danni alle persone.

PRECAUZIONE:
Non togliere il coperchio svitandolo.
Per ridurre i pericoli di scosse elettriche, non togliere il coperchio. All'interno non ci sono parti riparabili dall'utente.
Per le riparazioni, rivolgersi a personale tecnico qualificato.

PRECAUZIONE:
La spina del cavo di alimentazione deve essere sempre a portata di mano.
La presa c.a. (pressa di rete) deve essere installata vicino all'apparecchio ed essere facilmente accessibile.
Per isolare completamente questo prodotto dalla fonte di alimentazione, staccare la spina del cavo di alimentazione dalla presa di corrente.

PRECAUZIONE:
Per assicurare una buona ventilazione, non installare o sistemare questo apparecchio in uno scaffale, mobile incorporato od altro spazio chiuso. Per evitare i pericoli di scosse elettriche o d'incendio a causa di un surriscaldamento, accertarsi che tende od altro materiale non ostacolino la ventilazione.

PRECAUZIONE:
Per ridurre i pericoli d'incendio o di scosse elettriche e di fastidiose interferenze, usare soltanto gli accessori raccomandati.

PRECAUZIONE:
Controllare l'installazione almeno una volta all'anno.
Un'installazione incorretta può risultare nella caduta dell'apparecchio con conseguenti danni alle persone.

▭ sono le informazioni sulla sicurezza.

Precauzione per il cavo di alimentazione

PER LA PROPRIA SICUREZZA, LEGGERE ATTENTAMENTE IL TESTO SEGUENTE.
Questo prodotto è dotato di un cavo di alimentazione c.a. di 2 tipi. Uno è per l'Europa continentale, ecc. e l'altro esclusivamente per il Regno Unito.

In ciascuna area locale bisogna usare il cavo di alimentazione appropriato, perché ogni altro tipo di cavo non è adatto.

PER L'EUROPA CONTINENTALE, ECC.
Da non usare nel Regno Unito.

PER IL REGNO UNITO SOLTANTO

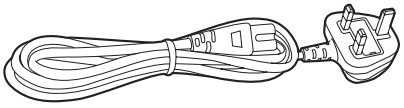

▭ sono le informazioni sulla sicurezza.

AVVISO EMC PER L'ACQUIRENTE/UTENTE DELL'APPARATO

1. Prerequisiti essenziali per la conformità agli standard sopra menzionati

<1> Periferiche da collegare all'apparato e cavi di collegamento speciali

- Si raccomanda all'acquirente/utente di collegare l'apparato esclusivamente con periferiche da noi approvate.
- Si raccomanda all'acquirente/utente di utilizzare esclusivamente i cavi di collegamento descritti in basso.

<2> Per i cavi di collegamento, utilizzare cavi schermati idonei per l'utilizzo previsto per l'apparato.

- Cavi di collegamento per segnali video
  Utilizzare cavi coassiali con doppia schermatura, progettati per applicazioni in alta frequenza da 75-ohm, per SDI (interfaccia digitale seriale).
  Per i segnali video analogici sono consigliati cavi coassiali, progettati per applicazioni in alta frequenza da 75-ohm.
- Cavi di collegamento per segnali audio
  Se l'apparato dell'utente supporta i segnali audio digitali seriali AES/EBU, utilizzare i cavi progettati per segnali AES/EBU.
  Per i segnali audio analogici, utilizzare cavi schermati che garantiscono prestazioni di qualità per le applicazioni di trasmissione ad alta frequenza.
- Altri cavi di collegamento (IEEE1394, USB)
  Come cavi di collegamento, utilizzare cavi schermati che garantiscono prestazioni di qualità per le applicazioni ad alta frequenza.
- Per la connessione al terminale del segnale DVI utilizzare un cavo dotato di anello in ferrite.
- Se l'apparato dell'utente dispone di anima/e in ferrite, questa deve essere attaccata al cavo o ai cavi come indicato nelle istruzioni che seguono nel presente manuale.

2. Livello di prestazioni

Il livello di prestazioni dell'apparato è equivalente o superiore al livello di prestazioni richiesto da questi standard.
Tuttavia, l'apparato potrebbe essere disturbato da interferenze esterne qualora venga utilizzato in un ambiente EMC, come nel caso di un'area con forti campi elettromagnetici (generati dalla presenza di torri per la trasmissione di segnali, telefoni cellulari, ecc.). In casi simili, al fine di minimizzare il disturbo di tali interferenze sull'apparato, si consiglia di intervenire sull'apparato e sul suo ambiente operativo adottando le misure indicate di seguito:

1. Posizionare l'apparato lontano dalla fonte dell'interferenza.
2. Cambiare la direzione dell'apparato.
3. Cambiare il metodo di collegamento utilizzato per l'apparato.
4. Collegare l'apparato a un'altra presa sul muro che non sia condivisa con altri apparecchi.

Smaltimento di vecchie apparecchiature
Solo per Unione Europea e Nazioni con sistemi di raccolta e smaltimento

Questo simbolo sui prodotti, sull'imballaggio e/o sulle documentazioni o manuali accompagnanti i prodotti indica che i prodotti elettrici, elettronici non devono essere buttati nei rifiuti domestici generici.
Per un trattamento adeguato, recupero e riciclaggio di vecchi prodotti vi invitiamo a portarli negli appositi punti di raccolta secondo la legislazione vigente nel vostro paese.
Con uno smaltimento corretto, contribuirete a salvare importanti risorse e ad evitare i potenziali effetti negativi sulla salute umana e sull'ambiente. Per ulteriori informazioni su raccolta e riciclaggio, vi invitiamo a contattare il vostro comune, rivenditore o fornitore.
Lo smaltimento non corretto di questi rifiuti potrebbe comportare sanzioni in accordo con la legislazione nazionale.

I simboli su questo prodotto (compresi gli accessori) rappresentano quanto segue.

∼	CA
⎓	DC

Fabbricato da:
Panasonic Entertainment & Communication Co., Ltd.
1-10-12, Yagumo-higashi-machi, Città di Moriguchi, Osaka, Giappone
Importatore:
Panasonic Connect Europe GmbH
Hagenauer Strasse 43, 65203 Wiesbaden, Germania
Rappresentante autorizzato nell'UE:
Panasonic Connect Europe GmbH
Panasonic Testing Centre
Winsbergring 15, 22525 Amburgo, Germania

Прочитайте нижеследующее до начала эксплуатации! (Для AW-UE100WE, AW-UE100KE)

ОСТОРОЖНО:
- Для снижения риска возникновения пожара или удара электрическим током не подвергайте данное оборудование воздействию дождя или влаги.
- Для снижения риска возникновения пожара или удара электрическим током держите данное оборудование подальше от любых жидкостей. Используйте и храните его только в местах, где оно не будет подвергаться риску попадания капель или брызг жидкости и не помещайте емкостей с жидкостью на оборудование.

ОСТОРОЖНО:
Всегда храните крепежный винт для основного устройства, крепежные винты для кронштейна и крепежный винт троса для защиты от падения вне доступа младенцев и маленьких детей.

ОСТОРОЖНО:
Это оборудование совместимо с классом A стандарта CISPR 32. В жилых районах это оборудование может стать причиной радиопомех.

ОСТОРОЖНО:
Установка должна выполняться только квалифицированным специалистом по установке.
Ненадлежащая установка может привести к падению всего аппарата и получению травмы.

ВНИМАНИЕ:
Не отвинчивайте крышки панелей.
Для снижения риска удара электрическим током не снимайте панели. Внутри устройства нет деталей, подлежащих обслуживанию пользователем.
Обратитесь за сервисным обслуживанием к квалифицированному персоналу.

ВНИМАНИЕ:
Сетевой штепсель шнура питания должен всегда быть в рабочем состоянии.
Штепсельная розетка переменного тока (сетевая розетка) должна быть установлена возле оборудования и быть легкодоступной. Для полного отключения данного оборудования от сети переменного тока отсоедините шнур питания от штепсельной розетки переменного тока.

ВНИМАНИЕ:
Для обеспечения надлежащей вентиляции не устанавливайте и не размещайте данное устройство на книжном стеллаже, во встроенном шкафу или в другом закрытом пространстве. Для предотвращения риска поражения электрическим током или опасности возгорания вследствие перегрева убедитесь, что занавески или другие материалы не препятствуют вентиляции.

ВНИМАНИЕ:
Для снижения риска возникновения пожара или удара электрическим током и возникновения помех используйте только рекомендуемые дополнительные принадлежности.

ВНИМАНИЕ:
Проверяйте установку по крайней мере раз в год.
Ненадлежащая установка может привести к падению устройства и получению травмы.

Данный знак обозначает информацию, относящуюся к технике безопасности.

Меры предосторожности для сетевого провода переменного тока

В ЦЕЛЯХ ВАШЕЙ БЕЗОПАСНОСТИ, ПОЖАЛУЙСТА, ВНИМАТЕЛЬНО ПРОЧТИТЕ ПРИВЕДЕННЫЙ НИЖЕ ТЕКСТ.
К данному изделию прилагаются сетевой провод переменного тока 2 типов. Один из них предназначен для европейского континента и т.п., а другой предназначен только для Великобритании.

В каждом местном регионе необходимо использовать соответствующий сетевой провод, поскольку другой тип сетевого провода не подходит.

ДЛЯ ЕВРОПЕЙСКОГО КОНТИНЕНТА И Т.П.	ТОЛЬКО ДЛЯ ВЕЛИКОБРИТАНИИ
Не для использования в Великобритании.	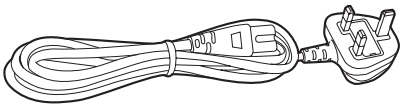

Данный знак обозначает информацию, относящуюся к технике безопасности.

Прочитайте нижеследующее до начала эксплуатации! (Для AW-UE100WE, AW-UE100KE) (продолжение)

ПРИМЕЧАНИЕ EMC ДЛЯ ПОКУПАТЕЛЯ/ПОЛЬЗОВАТЕЛЯ

1. Условия, которые необходимо соблюдать для достижения соответствия указанным стандартам

<1> Периферийное оборудование, которое подключается к устройству, и специальные соединительные кабели

- Настоятельно рекомендуется использовать только то оборудование, которое поставляется как периферийные устройства для подключения к данному аппарату.
- Используйте только соединительные кабели, представленные ниже.

<2> В качестве соединительных кабелей используйте экранированные кабели, которые соответствуют задачам подключения устройства.

- Соединительные кабели для передачи видеосигнала
  Для подключения SDI (Serial Digital Interface) следует использовать двойной экранированный коаксиальный кабель, предназначенный для высокочастотных приложений с сопротивлением 75 Ом, для SDI (Serial Digital Interface).
  Для передачи аналоговых видеосигналов рекомендуется использовать коаксиальный кабель, предназначенный для высокочастотных приложений с сопротивлением 75 Ом.
- Соединительные кабели для передачи аудиосигнала
  Если видеокамера принимает цифровые аудиосигналы AES/EBU, следует использовать кабели, предназначенные специально для AES/EBU.
  Для передачи аналоговых аудиосигналов используйте экранированные кабели, которые обеспечивают высокую производительность при работе с высокочастотными приложениями.
- Другие типы соединительных кабелей (IEEE1394, USB)
  Следует использовать экранированные кабели, которые обеспечивают высокую производительность при работе с высокочастотными приложениями.
- При подключении к DVI signal terminal следует использовать кабель на основе феррита.
- Если камера поставляется с ферритовыми сердечниками, следует подсоединить их к кабелям, как показано в инструкции.

2. Уровень производительности

Уровень производительности данного устройства соответствует требованиям указанных стандартов или превосходит их.
При использовании устройства вблизи оборудования, которое является источником сильного электромагнитного излучения, могут возникать помехи (например, при использовании вблизи устройств передачи сигналов, мобильных телефонов и др.).
Для минимизации подобного воздействия на устройство рекомендуется выполнить следующие действия с устройством и другими источниками электромагнитного излучения:

1. Переместите камеру на достаточно большое расстояние от других устройств.
2. Измените направление расположения камеры.
3. Измените метод подключения камеры.
4. Подключите камеру к другому источнику питания, который не используется никакими устройствами.

Символы на данном изделии (включая дополнительные принадлежности) означают следующее:

∿	Переменный ток
⎓	Постоянный ток

Read this first!

Note on grounding

- Ground the unit via the <SIGNAL GND> ground connector.

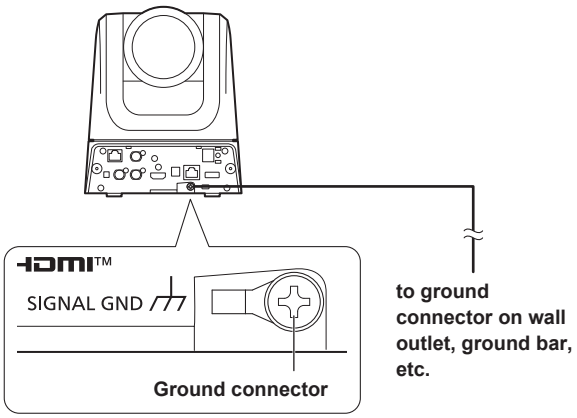

Before use

Overview

- This product is an all-in-one pan-tilt head remote camera that supports 4K/12G-SDI and is also compatible with 4K/60p format.
- Equipped with an optical 24x zoom lens and 4K-compatible 1/2.5 type MOS sensor, it is possible to shoot high-quality images with a high degree of realism with the horizontal resolution of 1500 lines.
  With its built-in image-shake correction and night mode functions, the unit can shoot in a wide range of environments.
- This product is compatible with High Bandwidth NDI (hereafter, NDI) and NDI|HX technology of NewTek, Inc.
  The problem of IP transmission delay and image degradation of NDI|HX will be resolved with High Bandwidth NDI.
- The problem of operating noise in pan/tilt operations has been significantly reduced by adopting the Direct Drive system.
- The unit supports transmission of video to NewTek High Bandwidth NDI and NDI|HX compatible software applications and hardware devices over a network.
- When a controller is connected, camera operations can be performed smoothly via IP control or serial control.
- The unit features a night mode that exposes subjects to infrared rays, making it possible to shoot even under low-light conditions.
- When the unit is connected to a personal computer via an IP network, it can be operated via a web browser.
- With a variety of 4K interfaces, there are individual outputs for HD and SDI, so the unit can be used flexibly in a wide range of situations as a 4K-compatible remote camera.
- Connection with a Panasonic camera controller is also possible via Panasonic's proprietary serial communication format.
- The unit is available in white (AW-UE100WPC/AW-UE100WE/W-UE100WED) or black (AW-UE100KPC/AW-UE100KE/AW-UE100KED) to suit your intended application and environment.

Computer requirements

CPU	7th Generation Intel® Core™ (Kaby Lake or later) recommended
Memory	**For Windows:** 4 GB or more **For Mac:** 4 GB or more
Network function	100BASE-T/TX or 1000BASE-T, RJ-45 connector
Image display	Resolution: 1920 × 1080 pixels or more Color generation: True Color 24-bit or more
Supported operating systems and web browsers	**For Windows:** Microsoft® Windows® 10 Windows® Internet Explorer® 11 64-bit/32-bit Microsoft Edge Google Chrome
	For Mac: macOS 10.13 Safari 13 macOS 10.14 Safari 13 macOS 10.15 Safari 13 macOS 10.15 Google Chrome
	For iPhone, iPad: iOS Safari iPadOS
	For Android: Android OS Google Chrome
Other	Adobe® Reader® (for viewing the operating instructions available on the website)

IMPORTANT

- **Failure to provide the required personal computer environment may slow down the delineation of the images on the screen, make it impossible for the web browser to work and cause other kinds of problems.**

<NOTE>

- Depending on the software version of the unit, an update may be necessary.
- For the latest information on compatible operating systems and web browsers, visit the support desk at the following website.

  https://pro-av.panasonic.net/en/

Disclaimer of warranty

IN NO EVENT SHALL Panasonic Entertainment & Communication Co., Ltd. BE LIABLE TO ANY PARTY OR ANY PERSON, EXCEPT FOR REPLACEMENT OR REASONABLE MAINTENANCE OF THE PRODUCT, FOR THE CASES, INCLUDING BUT NOT LIMITED TO BELOW:

① ANY DAMAGE AND LOSS, INCLUDING WITHOUT LIMITATION, DIRECT OR INDIRECT, SPECIAL, CONSEQUENTIAL OR EXEMPLARY, ARISING OUT OF OR RELATING TO THE PRODUCT;
② PERSONAL INJURY OR ANY DAMAGE CAUSED BY INAPPROPRIATE USE OR NEGLIGENT OPERATION OF THE USER;
③ UNAUTHORIZED DISASSEMBLE, REPAIR OR MODIFICATION OF THE PRODUCT BY THE USER;
④ INCONVENIENCE OR ANY LOSS ARISING WHEN IMAGES ARE NOT DISPLAYED, DUE TO ANY REASON OR CAUSE INCLUDING ANY FAILURE OR PROBLEM OF THE PRODUCT;
⑤ ANY PROBLEM, CONSEQUENTIAL INCONVENIENCE, OR LOSS OR DAMAGE, ARISING OUT OF THE SYSTEM COMBINED BY THE DEVICES OF THIRD PARTY;
⑥ ANY DEMANDS FOR COMPENSATION, CLAIMS, ETC. OCCASIONED BY THE INFRINGEMENT OF PRIVACY BY INDIVIDUALS OR ORGANIZATIONS WHOSE IMAGES WERE SHOT BY THE USER BECAUSE THESE IMAGES (INCLUDING THE RECORDINGS MADE) WERE MADE AVAILABLE BY THE USER BECAUSE IN THE PUBLIC DOMAIN FOR SOME REASON OR OTHER OR BECAUSE THE IMAGES ENDED UP BEING USED FOR PURPOSES OTHER THAN THE ONE DESCRIBED ABOVE;
⑦ LOSS OF REGISTERED DATA CAUSED BY ANY FAILURE.

Network security

As the unit intended to be used while connected to a network, the following security risks exist.

① Leakage or theft of information through the unit
② Unauthorized operation of the unit by persons with malicious intent
③ Interference with or stoppage of the unit by persons with malicious intent

It is your responsibility to take precautions, such as those described below, to protect yourself against the above network security risks. Panasonic does not accept any responsibility for damage of this type.

- Use the unit in a network secured by a firewall, etc.
- If the unit is connected to a network that includes personal computers, make sure that the system is not infected by computer viruses or other malicious programs (using a regularly updated antivirus program, anti-spyware program, etc.).
- Protect your network against unauthorized access by restricting users to those who log in with an authorized user name and password.
- After accessing the unit as an administrator, be sure to close all web browsers.
- Change the administrator password periodically.
- To avoid passwords that can be guessed easily by third parties, set a password of at least 8 characters in length, including at least 3 different types of characters, such as upper case, lower case, numbers, and symbols.
- Restrict access to the unit by authenticating the users, for example, to prevent setting information stored on the unit from leaking over the network.
- Do not install the unit in locations where the unit, cables, and other parts can be easily damaged or destroyed by persons with malicious intent.
- Avoid connections that use public lines.

<NOTE>

Notes on user authentication

- User authentication on the unit can performed via digest authentication or basic authentication. If basic authentication is used without the use of a dedicated authentication device, password leaks may occur.
  We recommend using digest authentication or host authentication.

Usage restrictions

- We recommend connecting the unit, controller, and any computers to the same network segment.
  Events based on settings inherent to the network devices, for example, may occur in connections that include different segments, so be sure to perform checks prior to operation.

Features

Multi-format support

- You can switch between the following formats via the camera menus or a web browser.

[4K format]
2160/59.94p, 2160/50p, 2160/29.97p*1, 2160/25p*1, 2160/24p*1, 2160/23.98p*1
[HD format]
1080/59.94p, 1080/50p, 1080/29.97p*1, 1080/29.97PsF, 1080/25p*1, 1080/25PsF, 1080/23.98p*2, 1080/24p*1, 1080/23.98p*1, 1080/23.98PsF, 1080/59.94i, 1080/50i, 720/59.94p, 720/50p

*1 Native output
*2 OVER 59.94i output (your monitor may recognize the signal as 59.94i).

1/2.5-type 4K MOS sensor and high-performance 24x zoom lens featured

- The latest 1/2.5-type 4K MOS sensor and DSP (Digital Signal Processor) are incorporated. High-quality pictures are obtained by video processing in many different kinds of ways.
- In addition to its optical 24x zoom lens, the unit comes with a 10x digital zoom to achieve high-quality images that overflow with ambiance. Zoom up to 36x is possible (up to 28x in 4K mode) while maintaining the picture quality with the use of iZoom.
- A dynamic range stretcher (DRS) function that compensates for overexposure and loss of dark detail and a digital noise reduction (DNR) function for minimizing image lag even in dark locations and shooting scenes clearly are incorporated to reproduce clean and clear images in a wide range of applications.

Easy operation of unit enabled by its integration with a high-performance pan-tilt head unit

- Operations at the high speed of 180°/s
- Wide rotational angles with a panning range of ±175° and a tilting range from –30° to 210°
- Quiet operation with noise levels of NC35 or less
- Storage of up to 100 positions in the preset memory
  (The number of preset memories that can be used varies from one controller to another.)

Built-in night mode

- The unit supports infrared shooting.
  By exposing subjects to infrared rays, shooting under ordinarily difficult low-light conditions is possible.
  (Image output will be in black and white.)
- The iris will be fixed at open.

IP image output functions

- The unit is equipped with image compression and IP transmission LSI capabilities. Output in 4K quality at up to 60 fps.
- Operation with IP control allows for a wide range of applications, such as controlling the camera from remote locations.

High degree of compatibility with Panasonic's currently available controllers, enabling a flexible system to be put together

- A maximum of five units can be operated by serial control from one of Panasonic's currently available controllers (AW-RP150, AW-RP60).
  The unit can also be used together with the cameras and pan-tilt head unit systems currently available from Panasonic Entertainment & Communication Co., Ltd. so that an existing system can be used to advantage to put together a system that is even more flexible.

<NOTE>
- It may be necessary to upgrade the version of the controllers in order to support the unit. For details on upgrading, visit the support page on the following website.
  https://pro-av.panasonic.net/en/
  The maximum distances between the units and controller is 1000 meters (3280 ft). (when serial control is exercised)
  Use of an external device or some other means must be provided separately in order to extend the video signal connections.

Easy construction of systems thanks to integrated design used for pan-tilt head, camera and lens

- By integrating the camera, lens and pan-tilt head into a single unit, it is now easier to construct systems.

Use of easy-to-operate wireless remote control (optional accessory) is possible

- A wireless remote control capable of operating up to four units can be used.
  It can easily be used to set the various functions or switch between them while viewing the menu screens.

Flexible camera layout enabled by simple connection and installation

- This unit features excellent connectivity and installability thanks to the IP control; a lightweight main unit, and the turn-lock mechanism, which enables the user to install it on his or her own (only when used indoors).

<NOTE>
- Bear in mind that this unit is designed to be used indoors only: It cannot be used outdoors.

While including a 4K-compatible or different kinds of interface, the unit still has the same installation footprint as previous models

- The unit maintains the compact installation footprint of previous models.

Easy connections and settings courtesy of IP control

- Up to two hundred units can be operated by IP connection from a Panasonic controller (AW-RP150, AW-RP60).
  (The maximum length of the LAN cables is 100 meters (328 ft).)
- Network connection with AW-RP150 or AW-RP60 requires setup of an initial account. (→ page 65)
  When an initial account is not set up, AW-RP150 or AW-RP60 can detect but cannot control this unit.

PoE++ *3 eliminates need for camera power configurations

- Configurations for camera's power supply are not necessary when the unit is connected to a network device that supports the PoE++ standard (IEEE 802.3bt compliant)*4.
  Software authentication (LLDP) is also supported, but it may be necessary to make settings on the network device (IEEE P802.3bt compliant)*4.

<NOTE>
- If the AC adaptor and a PoE++ power supply are connected simultaneously, the AC adaptor will have priority. If the AC adaptor is disconnected while both power supplies are connected, the unit will restart automatically, and the image will be interrupted.
- Use a Category 5e cable or higher when using a PoE++ power supply. The maximum length of the cable between the power supply unit and the unit is 100 meters (328 ft). Using a cable that is lower than Category 5e may result in reduced power supply capabilities.

*3 Power over Ethernet Plus Plus. Referred to as "PoE++" in this manual.
*4 For details on PoE++ power supply devices for which operation has been verified, consult your local dealer.

Accessories

Check that the following accessories are present and accounted for.
• After removing the product from its container, dispose of the power cable cap (if supplied) and packing materials in an appropriate manner.

Mount bracket for installation surface (Hanging/Desktop) (1) 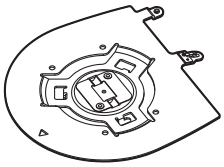	**Main unit mounting screw (with flat washer, spring washer) M3×6 mm (1/4 inches) (1)**	**Drop-prevention wire (1) Drop-prevention wire mounting screw (1) (comes attached to the unit)** 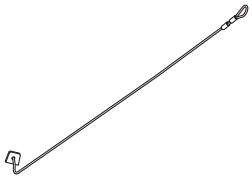
Bracket mounting screws (bind-head) M4×10 mm (13/32 inches) (4) 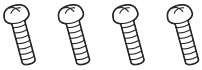	**Cable cover (1)** 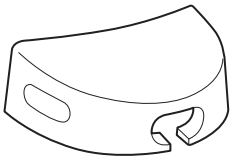	**AC adaptor (1)** 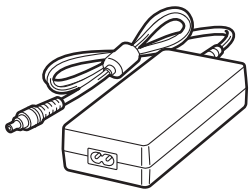
Power cable for AW-UE100WPC, AW-UE100KPC (1) 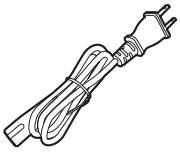	**for AW-UE100WE, AW-UE100KE (2)** ● For U.K. and Saudi Arabia ● For Continental Europe, etc. 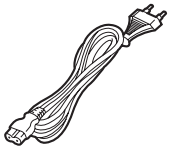	**for AW-UE100WED, AW-UE100KED (1)** ● For India only

Optional accessories

● **Wireless remote control AW-RM50G (Size "AA" dry battery x 2, obtained separately)**
● **Direct ceiling mount bracket WV-Q105A**

<NOTE>
• For details on optional accessories, refer to the catalog or consult your local dealer.

Operating precautions

Do not use the unit in oily-smoky or dusty places.

Performance may be adversely affected if small particles or other foreign objects get inside the product.
Take extra care in environments where a special effect such as theatrical smoke is used.

Do not allow foreign matter to make contact with the rotating parts.

Failure to obey may cause the unit to malfunction.

Maintenance

Turn off the unit's power before proceeding with maintenance. Failure to obey may result in injuries.
Wipe the surfaces using a soft dry cloth. Avoid all contact with benzine, paint thinners and other volatile substances, and avoid using these substances. Otherwise, the casing may become discolored.

Hold the bottom surface with both hands for picking up this unit.

If you hold the lens part or the sides, it will put a load strain on the motor and cause a malfunction.

Do not turn the camera head by hand.

Turning the camera head by hand may cause the unit to malfunction.

About the lens/pan-tilt head

If the lens, pan-tilt head, and other parts are not operated for a long period of time, the viscosity of the grease applied inside them may increase and operation may become no longer possible. Move the lens and pan/tilt head regularly.

Shoot under the proper lighting conditions.

To produce pictures with eye-pleasing colors, shoot under the proper lighting conditions.
The pictures may not appear with their proper colors when shooting under fluorescent lights. Select the proper lighting as required.

To ensure a stable performance in the long term

Using the unit for prolonged periods in locations where the temperature and humidity levels are high will cause its parts to deteriorate, resulting in a reduction of its service life.
(Recommended temperature: Max. 35 °C (95 °F))
Ensure that a cooling unit or heating unit will not blow any air directly toward the installation location.

Do not point the camera at strong lights.

When parts of the MOS sensor are exposed to spotlights or other strong lights, blooming (a phenomenon where the edges of strong lights become blurred) may occur.

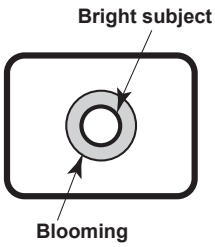

What happens with high-brightness subjects

Flare may occur if an extremely bright light source is pointed at the lens. In a case like this, change the angle or take some other remedial action.

When using the automatic functions

- In the [Scene] such as the camera menu, the initial settings on some items has been set to auto, making it impossible for these items to be operated manually. To operate them manually, switch from the auto settings to the manual settings as required.
- When using the ATW (auto tracking white adjustment) function under fluorescent lights, the white balance may vary.
- In some situations, it may be hard to focus at the auto setting. In cases like this, select the manual setting, and focus manually.

Zooming and focusing

When the focus is set manually, out-of-focusing may occur during zooming.
After zooming, if necessary, either adjust the focus or set the focus to auto.
When using the focus at the manual setting, proceed with zooming after setting the focus position at the Tele end where the focusing accuracy is higher. (However, if the distance from the unit to the subject is less than 1.2 meters (3.9 ft), the subject may shift out of focus at the Wide end.)
If zooming is performed to the Tele end after having adjusted the focus at the Wide end, out-of-focusing may occur.

Operation of the lens when the power is turned on

When the unit's power is turned on, the zoom, focus and iris are adjusted automatically.

The unit comes with the safe mode.

The safe mode is function designed to protect the unit from damage.
For details, refer to the Operating Instructions (PDF) → "Safe mode".

Concerning the HDMI interface standard

This unit has been certified as HDMI-compatible, but on rare occasions images may not be displayed depending on the HDMI device which has been connected to the unit.

Color bars

Color bars are used to adjust the color phase, and the widths and positions of these bars may differ from other models.

H.264/H.265 patent pool licensing

This product is licensed based on the AVC Patent Portfolio License, and the license does not extend beyond uses by users, who engage in the acts described below, for their own personal and non-profit applications.

(i) Recording of image information in compliance with the AVC standard (hereafter, "AVC videos")
(ii) Playing of AVC videos recorded by consumers engaging in personal activities or AVC videos acquired from licensed providers

For details, visit MPEG LA, LLC website (http://www.mpegla.com).

Concerning PoE++ power supply

The unit complies with the IEEE 802.3bt.
Use a compatible Ethernet hub and PoE++ injector to use a PoE++ power supply.
Software authentication (LLDP) complies with IEEE P802.3bt, but it may be necessary to make settings on the network device.
For details on Ethernet hubs and PoE++ injectors for which operations have been verified, consult your local dealer.

Operating precautions (continued)

Turn off the power before connecting or disconnecting the cables.

This unit is not equipped with a power switch.
Disconnect the AC adaptor power plug or turn off the PoE++ power supply device before connecting or disconnecting cables.

When the unit is not in use

Turn off the unit's power when it is not in use.
When the unit is no longer going to be used, do not leave it lying around, but be absolutely sure to dispose of it properly.

Do not touch the optical system parts.

The optical system parts are vital to the operation of the camera. Under no circumstances must they be touched.
In the unlikely event that they have become dusty, remove the dust by using a camera blower or by wiping them gently with a lens cleaning paper.

Do not point the camera directly at the sun or a laser beam no matter whether it is turned on or not.

Taking images of the sun, laser beams, or other brightly lit subjects for prolonged periods of time may damage the CCD.

Personal computer used

If the same image is displayed for a prolonged period on a personal computer's monitor, the monitor may be damaged. Use of a screen saver is recommended.

Concerning the IP address setting

Do not run the Easy IP Setup Software on a multiple number of personal computers for a single camera and set the IP address at the same time.
Otherwise, you will be unable to complete the proper procedure and set the IP address correctly.

About consumables

The following parts are consumables. Replace them using the lifespans as a guide.
The lifespans may vary depending on the operating environment and operating conditions. The lifespans are a guide for when the unit is used at 35 °C (95 °F).

- Cooling fan: Approx. 15000 hours

Contact your dealer regarding replacements.

Disposal of the unit

When the unit has reached the end of its service life and is to be disposed of, ask a qualified contractor to dispose of the unit properly in order to protect the environment.

Transportation

The camera unit is constructed to rotate easily. As malfunctions in camera movement may occur, transport after securing the camera unit so that it does not rotate.

① Face the lens up, then secure the lens part and camera head together with tape.
② Use tape to secure the camera head and pedestal in several locations.

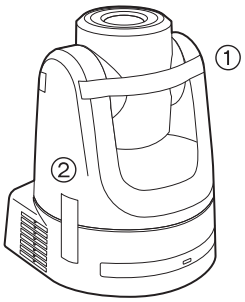

Moving the unit

- When carrying the unit, take care not to apply strong shocks or drop it.
- Remove connection cables when moving the unit.
- Turn off the system power when moving the unit.
- Wrap the unit in cushioning material, etc., when moving the unit so that impacts do not damage it.
- Treat the unit carefully so that vibrations or impacts do not damage it.

Information on software used with this product

This product includes GNU General Public License (GPL) and GNU Lesser General Public License (LGPL) licensed software, and the customer is entitled to obtain, modify, or redistribute the source code for the software.
This product includes MIT Licensed software.
This product includes BSD Licensed software.
For details on obtaining the source codes, visit the following website.
https://pro-av.panasonic.net/en/
However, do not contact Panasonic for questions regarding obtained source codes.

Wireless remote control (optional accessory)

This unit can be operated by remote control using a wireless remote control (model number: AW-RM50G) purchased separately. Check out the following points before using the wireless remote control.

- **Point the wireless remote control at the unit's wireless remote control signal light-sensing area (front panel or back panel), and operate it within a range of 10 meters (32.8 ft) from these areas.**

- **Refer to <Layout of wireless remote control signal light-sensing areas> on the right.**

- **The signal sensing distance is reduced if the angle at which the wireless remote control signals are sensed is increased.**
  The light-sensing sensitivity is reduced to about one-half when the wireless remote control is pointed at an angle of 40 degrees from each position in front of a wireless remote control signal light-sensing area (front panel or back panel).
  If the remote control is operated from the behind the unit, it may be either difficult or impossible to perform the desired operations.

- **When the unit is to be operated by the wireless remote control from the rear, remove the cable cover.**

- **If the unit is installed near fluorescent lights, plasma monitors or other such products or if the unit is exposed to sunlight, the effects of the light may make it impossible for the unit to be operated using the wireless remote control.**
  Be sure to follow the steps below for installation and use.
  - Take steps to ensure that the wireless remote control signal light-sensing area will not be exposed to the light from fluorescent lights, plasma monitors or other such products or from the sun.
  - Install the unit away from fluorescent lights, plasma monitors and other such products.

- **For about 10 minutes even after the batteries have been removed from the wireless remote control, the selection of the operation to be performed (the <CAM1>, <CAM2>, <CAM3> or <CAM4> button which was pressed last) will remain stored in the memory.**
  When a longer period of time elapses, however, the selection is reset to the status established when the <CAM1> button was pressed.

<Layout of wireless remote control signal light-sensing areas>

<NOTE>
- The arrows in the figure below show the light-sensing directions in which the wireless remote control signals travel.

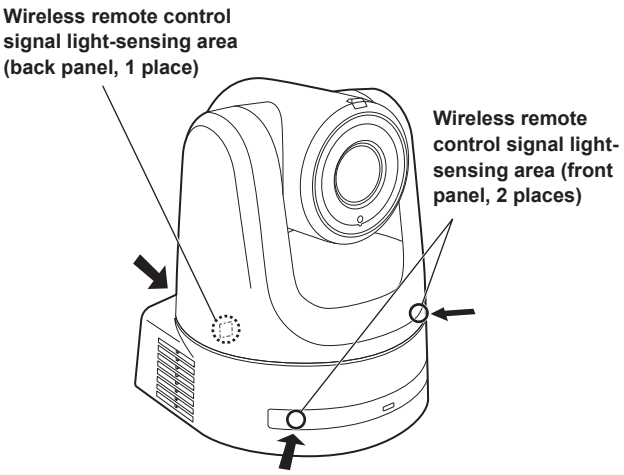

- **Top view**

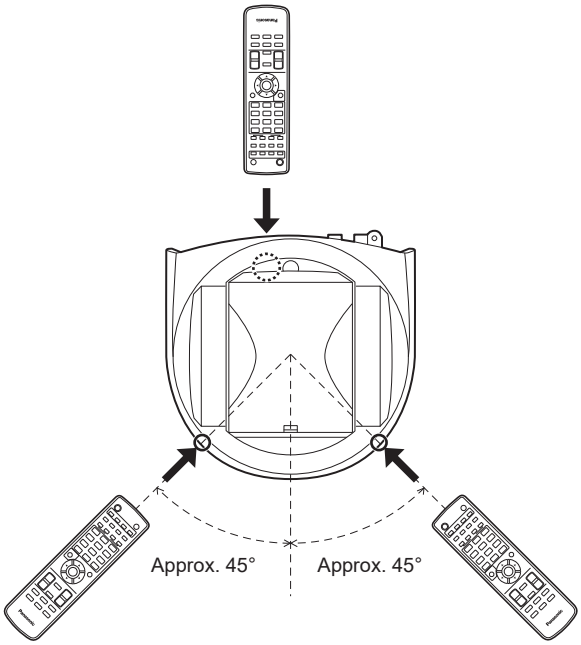

- **Rear panel view**

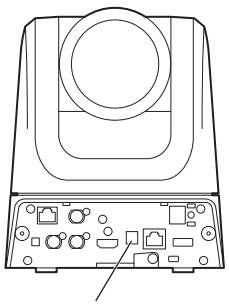

Parts and their functions

Camera unit

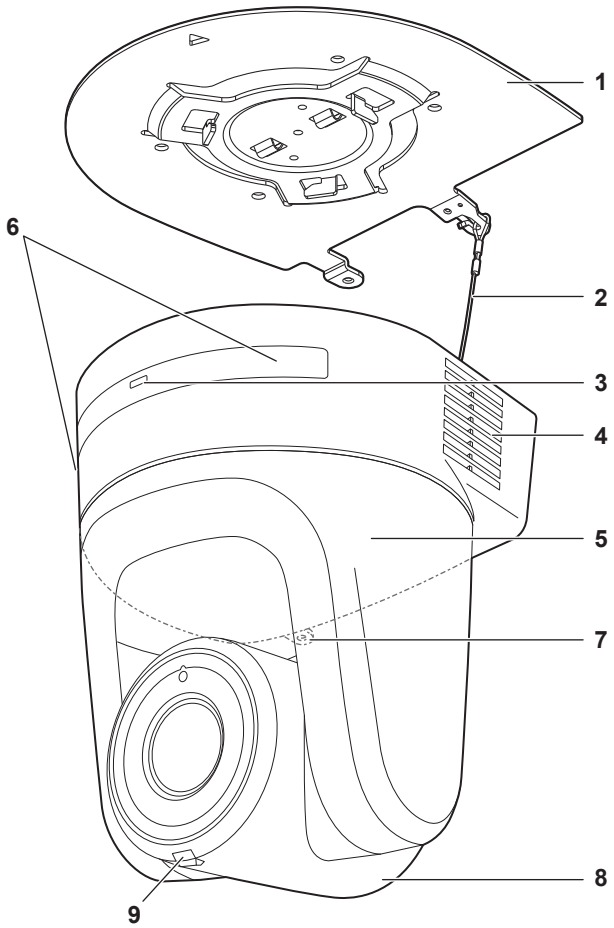

Rear panel

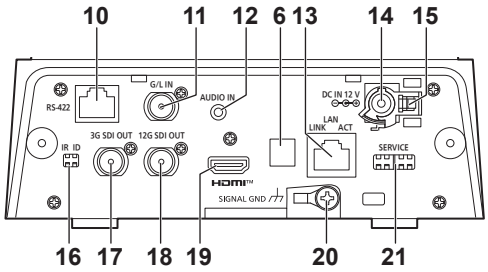

Bottom panel

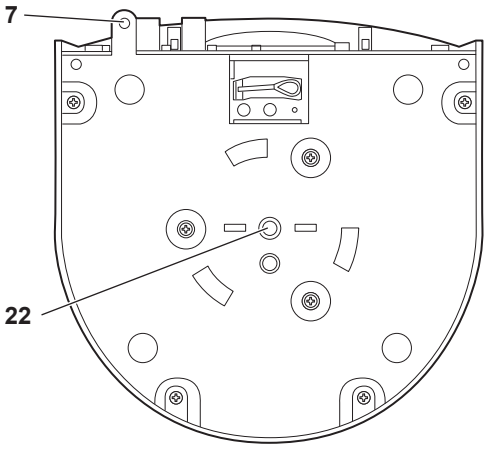

1. Mount bracket for installation surface (supplied accessory)

Mount this bracket onto the installation surface, and then attach the camera main unit to the bracket.

2. Drop-prevention wire

This wire is screwed down to the bottom panel of the camera main unit. Loop the circle part of the wire around the hook of the mount bracket.

3. Status display lamp

This lights in the following way depending on the status of the unit.

Orange	Light up	When the standby status is established
	Blink twice	When a signal not matched by the remote control ID has been received from the wireless remote control (optional accessory) while the power is on
Green	Light up	When the power is on
	Blink twice	When a signal matched by the remote control ID has been received from the wireless remote control (optional accessory) while the power is on
	Blinking rapidly	When the initialization process is complete
Red	Light up	When trouble has occurred in the unit
	Blinking slowly	Firmware being updated
	Blinking rapidly	When a PoE++ software authentication error has occurred

4. Ventilation holes

Blocking the ventilation holes may cause a malfunction. Make sure there is sufficient space around the ventilation holes.

5. Pan head

This rotates in the right and left direction.

6. Wireless remote control signal light-sensing area

There are three light-sensing areas on the front and rear panels of the camera pedestal.

7. Hole for securing the camera pedestal

This hole is provided in the bottom panel of the camera pedestal.

8. Camera head

This rotates in the up and down direction.

9. Tally lamp

This comes on or goes off in response to the control from the controller but only when “On” has been selected as the tally lamp use setting. The tally lamp is red or green.

Parts and their functions (continued)

10.RS-422 connector <RS-422>

This RS-422 connector (RJ-45) is connected when exercising serial control over the unit from an external device. Use a cable with the following specifications for the connection to this connector. Furthermore, by shorting the R-TALLY signal (2-pin) with the GND (1-pin), it is possible to light the tally lamp (red) in the camera head section of the unit.

<NOTE>

- Do not connect PoE cable to the RS-422 port.
- Do not apply a voltage to the R_TALLY_IN signal pin.
- Menu settings enable the output to pin 7 and pin 8 of the red tally and green tally signals received by the unit. Output is by contact output, and normally is “OPEN”, then it becomes “MAKE” for output. (Operating Instructions (PDF) → “Camera menu items” → “Output 5/5 screen” → “External Output”)

LAN cable*1 (category 5e or above, straight cable), max. 1000 m (3280 ft)

*1 **Use of an STP (shielded twisted pair) cable is recommended.**

Pin No.	Signal	Pin No.	Signal
1	GND	5	TXD+
2	R_TALLY_IN	6	RXD+
3	RXD–	7	OPTION_OUT1
4	TXD–	8	OPTION_OUT2

■ Example OPTION_OUT1, OPTION_OUT2 connector connections

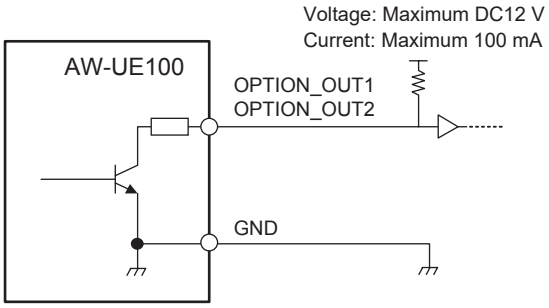

11.G/L IN connector <G/L IN>

This is the external sync signal input connector.
This unit supports BBS (Black Burst Sync) and tri-level synchronization.
Supply to this connector the signals that correspond to the video signal format which has been set.

Frequency: 59.94 Hz, 29.97 Hz

Format	External sync signal input format		
	Tri-level sync		BBS
2160/59.94p	1080/59.94p	1080/59.94i	480/59.94i
2160/29.97p	1080/29.97p 1080/29.97PsF		
1080/59.94p	1080/59.94p		
1080/59.94i	—		
1080/29.97p	1080/29.97p 1080/29.97PsF		
1080/29.97PsF	1080/29.97p 1080/29.97PsF		
1080/23.98p over 59.94i	—		
720/59.94p	720/59.94p		

Frequency: 50 Hz, 25 Hz

Format	External sync signal input format		
	Tri-level sync		BBS
2160/50p	1080/50p	1080/50i	576/50i
2160/25p	1080/25p 1080/25PsF		
1080/50p	1080/50p		
1080/50i	—		
1080/25p	1080/25p 1080/25PsF		
1080/25PsF	1080/25p 1080/25PsF		
720/50p	720/50p		

Frequency: 24 Hz

Format	External sync signal input format
	Tri-level sync
2160/24p	1080/24p 1080/24PsF
1080/24p	

Frequency: 23.98 Hz

Format	External sync signal input format
	Tri-level sync
2160/23.98p	1080/23.98p 1080/23.98PsF
1080/23.98p	
1080/23.98PsF	

12.AUDIO IN connector <AUDIO IN>

Inputs external audio (microphone, line).

13.LAN connector for IP control <LAN LINK/ACT>

This LAN connector (RJ-45) is connected when exercising IP control over the unit from an external device. Use a LAN cable (category 5e or above, max STP 100 m (328 ft)) for connection.

Parts and their functions (continued)

14.DC IN connector <12V ⎓ IN ⊖-◉-⊕>

Connect the AC adaptor supplied with the unit to this connector to supply the DC 12 V voltage to the unit.

> ■ **AC adaptor**
> Be sure to use the supplied AC adaptor.

15.Cable clamp

This is used to hold the cable connection to the DC IN connector and prevent it from becoming disconnected.

16.IR ID switches <IR ID>

CAM1	CAM2	CAM3	CAM4
IR ID	IR ID	IR ID	IR ID

These are used to select the ID of the wireless remote control (optional accessory). (→ page 62)
The IR ID switch settings “CAM1” to “CAM4” correspond to the <CAM1> to <CAM4> buttons on the wireless remote control.

17.3G SDI OUT connector <3G SDI OUT>

This is an SDI video signal output connector. Depending upon the output signal format, 3G-SDI or 1.5G-SDI signals are output.

18.12G SDI OUT connector <12G SDI OUT>

This is an SDI video signal output connector. Depending upon the output signal format, 12G-SDI, 6G-SDI, 3G-SDI or 1.5G-SDI signals are output.

19.HDMI connector <HDMI>

This is the HDMI video output connector.

20.Ground connector

Connects to the ground connector on a wall outlet, ground bar, etc. for grounding. (→ page 43)

21.Service switches <SERVICE>

Perform switch settings before turning the unit on.

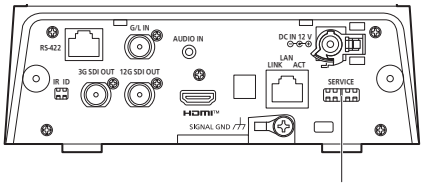

Service switches

	Function	Factory settings
SW1	Switches for initialization (Refer to the explanations in “Initialization 1” and “Initialization 2”)	OFF
SW2	Always leave at OFF (used for factory adjustments)	OFF
SW3		OFF
SW4		OFF

Initialization 1

- Reset the user authentication settings and host authentication settings for network connection.
  (This will delete all the registered user information (IDs/passwords) and host information (IP addresses).)
- With the IR ID switches and service switches set as shown below, turn on the power of the unit.

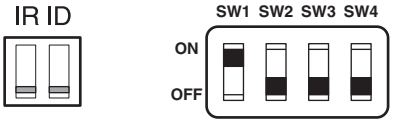

<NOTE>

- When initialization is complete, the status display lamp on the front of the unit blinks green. Set the service switches back to their original positions (SW1 to SW4 all OFF), then restart the unit.

Initialization 2

- The unit is reset to the state it was in at the time of purchase. (All camera menu setting values and network setting values are reset.)
- With the IR ID switches and service switches set as shown below, turn on the power of the unit.

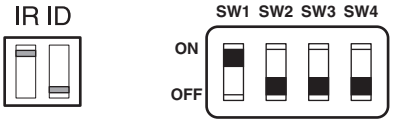

<NOTE>

- When initialization is complete, the status display lamp on the front of the unit blinks green. Set the service switches back to their original positions (SW1 to SW4 all OFF), then restart the unit.

22.Tripod screw holes

(Screw: 1/4-20 UNC, ISO 1222 [6.35 mm (1/4 inches)])

Use these screw holes when securing the unit to a tripod, etc.

Parts and their functions (continued)

■ Output conditions for each video format

Frequency	System Format	HDMI	12G SDI OUT	3G SDI OUT	NDI
59.94Hz	2160/59.94p	2160/59.94p*1 1080/59.94p*2	2160/59.94p*1 1080/59.94p*2	1080/59.94p*2 1080/59.94i*2	2160/59.94p*3
	2160/29.97p	2160/29.97p*4 1080/29.97p	2160/29.97p*4 1080/29.97p	1080/29.97p	2160/29.97p*5
	1080/59.94p	1080/59.94p	1080/59.94p	1080/59.94p 1080/59.94i	1080/59.94p
	1080/59.94i	1080/59.94i	1080/59.94i	1080/59.94i	1080/59.94p
	1080/29.97p	1080/29.97p	1080/29.97p	1080/29.97p	1080/29.97p
	1080/29.97PsF	1080/29.97p	1080/29.97PsF	1080/29.97PsF	1080/29.97p
	1080/23.98p over 59.94i	1080/23.98p over 59.94p	1080/23.98p over 59.94i	1080/23.98p over 59.94i	1080/59.94p
	720/59.94p	720/59.94p	720/59.94p	720/59.94p	720/59.94p
50Hz	2160/50p	2160/50p*6 1080/50p*7	2160/50p*6 1080/50p*7	1080/50p*7 1080/50i*7	2160/50p*8
	2160/25p	2160/25p*9 1080/25p	2160/25p*9 1080/25p	1080/25p	2160/25p*10
	1080/50p	1080/50p	1080/50p	1080/50p 1080/50i	1080/50p
	1080/50i	1080/50i	1080/50i	1080/50i	1080/50p
	1080/25p	1080/25p	1080/25p	1080/25p	1080/25p
	1080/25PsF	1080/25p	1080/25PsF	1080/25PsF	1080/25p
	720/50p	720/50p	720/50p	720/50p	720/50p
24Hz	2160/24p	2160/24p*11 1080/24p	2160/24p*11 1080/24p	1080/24p	2160/24p*12
	1080/24p	1080/24p	1080/24p	1080/24p	1080/24p
23.98Hz	2160/23.98p	2160/23.98p*13 1080/23.98p	2160/23.98p*13 1080/23.98p	1080/23.98p	2160/23.98p*14
	1080/23.98p	1080/23.98p	1080/23.98p	1080/23.98p	1080/23.98p
	1080/23.98PsF	1080/23.98p	1080/23.98PsF	1080/23.98PsF	1080/23.98p

*1 When [UHD Crop] is [Crop(1080)] or [Crop(720)], 2160/59.94p cannot be selected.
*2 When [UHD Crop] is [Crop(720)], output is 720/59.94p.
*3 When [UHD Crop] is [Crop(1080)], output is 1080/59.94p and when [UHD Crop] is [Crop(720)], output is 720/59.94p.
*4 When [UHD Crop] is [Crop(1080)], 2160/29.97p cannot be selected.
*5 When [UHD Crop] is [Crop(1080)], output is 1080/29.97p.
*6 When [UHD Crop] is [Crop(1080)] or [Crop(720)], 2160/50p cannot be selected.
*7 When [UHD Crop] is [Crop(720)], output is 720/50p.
*8 When [UHD Crop] is [Crop(1080)], output is 1080/50p and when [UHD Crop] is [Crop(720)], output is 720/50p.
*9 When [UHD Crop] is [Crop(1080)], 2160/25p cannot be selected.
*10 When [UHD Crop] is [Crop(1080)], output is 1080/25p.
*11 When [UHD Crop] is [Crop(1080)], 2160/24p cannot be selected.
*12 When [UHD Crop] is [Crop(1080)], output is 1080/24p.
*13 When [UHD Crop] is [Crop(1080)], 2160/23.98p cannot be selected.
*14 When [UHD Crop] is [Crop(1080)], output is 1080/23.98p.

Parts and their functions (continued)

■ IP video transmission output (multi-channel display)

• **When "Streaming mode" is set to "H.265"**

Settings		H.265(1)	H.265(2)	H.264(1)	H.264(2)	H.264(3)	H.264(4)	JPEG(1)	JPEG(2)	JPEG(3)
Resolution		1920×1080 1280×720	1920×1080 1280×720 640×360	—	—	—	—	1920×1080 1280×720 640×360 320×180	640×360 320×180	640×360 320×180
Frame rate	**System frequency 59.94Hz**	60fps 30fps	60fps 30fps	—	—	—	—	30fps 15fps 5fps 1fps	30fps 15fps 5fps 1fps	30fps 15fps 5fps 1fps
	System frequency 50Hz	50fps 25fps	50fps 25fps	—	—	—	—	25fps 12.5fps 5fps 1fps	25fps 12.5fps 5fps 1fps	25fps 12.5fps 5fps 1fps
	System frequency 29.97Hz	30fps	30fps	—	—	—	—	30fps 15fps 5fps 1fps	30fps 15fps 5fps 1fps	30fps 15fps 5fps 1fps
	System frequency 25Hz	25fps	25fps	—	—	—	—	25fps 12.5fps 5fps 1fps	25fps 12.5fps 5fps 1fps	25fps 12.5fps 5fps 1fps
	System frequency 24/23.98Hz	24fps	24fps	—	—	—	—	24fps 12fps 4fps 1fps	24fps 12fps 4fps 1fps	24fps 12fps 4fps 1fps

• The H.265 transmission mode (Transmission priority) cannot be selected.
• When the system frequency is 24/23.98Hz, the resolution for H.265(1) and H.265(2) is limited to 1920×1080.
• You cannot make settings above the resolution and frame rate set by the system format.

• **When "Streaming mode" is set to "H.265 (UHD)"**

Settings		H.265(1)	H.265(2)	H.264(1)	H.264(2)	H.264(3)	H.264(4)	JPEG(1)	JPEG(2)	JPEG(3)
Resolution		3840×2160	—	—	—	—	—	1920×1080 1280×720 640×360 320×180	640×360 320×180	640×360 320×180
Frame rate	**System frequency 59.94Hz**	30fps	—	—	—	—	—	30fps 15fps 5fps 1fps	30fps 15fps 5fps 1fps	30fps 15fps 5fps 1fps
	System frequency 50Hz	25fps	—	—	—	—	—	25fps 12.5fps 5fps 1fps	25fps 12.5fps 5fps 1fps	25fps 12.5fps 5fps 1fps
	System frequency 29.97Hz	30fps	—	—	—	—	—	30fps 15fps 5fps 1fps	30fps 15fps 5fps 1fps	30fps 15fps 5fps 1fps
	System frequency 25Hz	25fps	—	—	—	—	—	25fps 12.5fps 5fps 1fps	25fps 12.5fps 5fps 1fps	25fps 12.5fps 5fps 1fps
	System frequency 24/23.98Hz	24fps	—	—	—	—	—	24fps 12fps 4fps 1fps	24fps 12fps 4fps 1fps	24fps 12fps 4fps 1fps

• The H.265(UHD) transmission mode (Transmission priority) cannot be selected.

Parts and their functions (continued)

- **When "Streaming mode" is set to "H.264"**

Settings		H.265(1)	H.265(2)	H.264(1)	H.264(2)	H.264(3)	H.264(4)	JPEG(1)	JPEG(2)	JPEG(3)
Resolution		—	—	1920×1080 1280×720	1920×1080 1280×720 640×360 320×180	1280×720 640×360 320×180	1280×720 640×360 320×180	1920×1080 1280×720 640×360 320×180	640×360 320×180	640×360 320×180
Frame rate	System frequency 59.94Hz	—	—	60fps 30fps 15fps 5fps	60fps 30fps 15fps 5fps	30fps 15fps 5fps	30fps 15fps 5fps	30fps 15fps 5fps 1fps	30fps 15fps 5fps 1fps	30fps 15fps 5fps 1fps
	System frequency 50Hz	—	—	50fps 25fps 12.5fps 5fps	50fps 25fps 12.5fps 5fps	25fps 12.5fps 5fps	25fps 12.5fps 5fps	25fps 12.5fps 5fps 1fps	25fps 12.5fps 5fps 1fps	25fps 12.5fps 5fps 1fps
	System frequency 29.97Hz	—	—	30fps 15fps 5fps	30fps 15fps 5fps	30fps 15fps 5fps	30fps 15fps 5fps	30fps 15fps 5fps 1fps	30fps 15fps 5fps 1fps	30fps 15fps 5fps 1fps
	System frequency 25Hz	—	—	25fps 12.5fps 5fps	25fps 12.5fps 5fps	25fps 12.5fps 5fps	25fps 12.5fps 5fps	25fps 12.5fps 5fps 1fps	25fps 12.5fps 5fps 1fps	25fps 12.5fps 5fps 1fps
	System frequency 24/23.98Hz	—	—	24fps	24fps	—	—	24fps 12fps 4fps 1fps	24fps 12fps 4fps 1fps	24fps 12fps 4fps 1fps

- The available options for the H.264 transmission mode (Transmission priority) are limited to 30fps or lower (excluding 24fps).
- When the system frequency is 24/23.98Hz, the resolution for H.264(1) and H.264(2) is limited to 1920×1080.
- You cannot make settings above the resolution and frame rate set by the system format.

- **When "Streaming mode" is set to "H.264 (UHD)"**

Settings		H.265(1)	H.265(2)	H.264(1)	H.264(2)	H.264(3)	H.264(4)	JPEG(1)	JPEG(2)	JPEG(3)
Resolution		—	—	3840×2160	—	—	—	1920×1080 1280×720 640×360 320×180	640×360 320×180	640×360 320×180
Frame rate	System frequency 59.94Hz	—	—	60fps 30fps	—	—	—	30fps 15fps 5fps 1fps	30fps 15fps 5fps 1fps	30fps 15fps 5fps 1fps
	System frequency 50Hz	—	—	50fps 25fps	—	—	—	25fps 12.5fps 5fps 1fps	25fps 12.5fps 5fps 1fps	25fps 12.5fps 5fps 1fps
	System frequency 29.97Hz	—	—	30fps	—	—	—	30fps 15fps 5fps 1fps	30fps 15fps 5fps 1fps	30fps 15fps 5fps 1fps
	System frequency 25Hz	—	—	25fps	—	—	—	25fps 12.5fps 5fps 1fps	25fps 12.5fps 5fps 1fps	25fps 12.5fps 5fps 1fps
	System frequency 24/23.98Hz	—	—	24fps	—	—	—	24fps 12fps 4fps 1fps	24fps 12fps 4fps 1fps	24fps 12fps 4fps 1fps

- The H.264(UHD) transmission mode (Transmission priority) cannot be selected.

Parts and their functions (continued)

• **When "Streaming mode" is set to "JPEG (UHD)"**

Settings		H.265(1)	H.265(2)	H.264(1)	H.264(2)	H.264(3)	H.264(4)	JPEG(1)	JPEG(2)	JPEG(3)
Resolution		—	—	1920×1080 1280×720	1920×1080 1280×720 640×360 320×180	1280×720 640×360 320×180	1280×720 640×360 320×180	3840×2160	—	—
Frame rate	**System frequency 59.94Hz**	—	—	60fps 30fps 15fps 5fps	60fps 30fps 15fps 5fps	30fps 15fps 5fps	30fps 15fps 5fps	5fps 1fps	—	—
	System frequency 50Hz	—	—	50fps 25fps 12.5fps 5fps	50fps 25fps 12.5fps 5fps	25fps 12.5fps 5fps	25fps 12.5fps 5fps	5fps 1fps	—	—
	System frequency 29.97Hz	—	—	30fps 15fps 5fps	30fps 15fps 5fps	30fps 15fps 5fps	30fps 15fps 5fps	5fps 1fps	—	—
	System frequency 25Hz	—	—	25fps 12.5fps 5fps	25fps 12.5fps 5fps	25fps 12.5fps 5fps	25fps 12.5fps 5fps	5fps 1fps	—	—
	System frequency 24/23.98Hz	—	—	24fps	24fps	—	—	4fps 1fps	—	—

• The available options for the H.264 transmission mode (Transmission priority) are limited to 30fps or lower (excluding 24fps).
• When the system frequency is 24/23.98Hz, the resolution for H.264(1) and H.264(2) is limited to 1920×1080.

• **When "Streaming mode" is set to "RTMP"**

Settings		H.265(1)	H.265(2)	H.264(1)	H.264(2)	H.264(3)	H.264(4)	JPEG(1)	JPEG(2)	JPEG(3)
Resolution		—	—	1920×1080 1280×720	—	—	—	1920×1080 1280×720 640×360 320×180	640×360 320×180	640×360 320×180
Frame rate	**System frequency 59.94Hz**	—	—	60fps 30fps 15fps 5fps	—	—	—	30fps 15fps 5fps 1fps	30fps 15fps 5fps 1fps	30fps 15fps 5fps 1fps
	System frequency 50Hz	—	—	50fps 25fps 12.5fps 5fps	—	—	—	25fps 12.5fps 5fps 1fps	25fps 12.5fps 5fps 1fps	25fps 12.5fps 5fps 1fps
	System frequency 29.97Hz	—	—	30fps 15fps 5fps	—	—	—	30fps 15fps 5fps 1fps	30fps 15fps 5fps 1fps	30fps 15fps 5fps 1fps
	System frequency 25Hz	—	—	25fps 12.5fps 5fps	—	—	—	25fps 12.5fps 5fps 1fps	25fps 12.5fps 5fps 1fps	25fps 12.5fps 5fps 1fps
	System frequency 24/23.98Hz	—	—	24fps	—	—	—	24fps 12fps 4fps 1fps	24fps 12fps 4fps 1fps	24fps 12fps 4fps 1fps

• The available options for the H.264 transmission mode (Transmission priority) are limited to 30fps or lower (excluding 24fps).
• When the system frequency is 24/23.98Hz, the resolution for H.264(1) and H.264(2) is limited to 1920×1080.
• You cannot make settings above the resolution and frame rate set by the system format.

Parts and their functions (continued)

- **When "Streaming mode" is set to "RTMP(UHD)"**

Settings		H.265(1)	H.265(2)	H.264(1)	H.264(2)	H.264(3)	H.264(4)	JPEG(1)	JPEG(2)	JPEG(3)
Resolution		—	—	3840×2160	—	—	—	1920×1080 1280×720 640×360 320×180	640×360 320×180	640×360 320×180
Frame rate	System frequency 59.94Hz	—	—	60fps 30fps	—	—	—	30fps 15fps 5fps 1fps	30fps 15fps 5fps 1fps	30fps 15fps 5fps 1fps
	System frequency 50Hz	—	—	50fps 25fps	—	—	—	25fps 12.5fps 5fps 1fps	25fps 12.5fps 5fps 1fps	25fps 12.5fps 5fps 1fps
	System frequency 29.97Hz	—	—	30fps	—	—	—	30fps 15fps 5fps 1fps	30fps 15fps 5fps 1fps	30fps 15fps 5fps 1fps
	System frequency 25Hz	—	—	25fps	—	—	—	25fps 12.5fps 5fps 1fps	25fps 12.5fps 5fps 1fps	25fps 12.5fps 5fps 1fps
	System frequency 24/23.98Hz	—	—	24fps	—	—	—	24fps 12fps 4fps 1fps	24fps 12fps 4fps 1fps	24fps 12fps 4fps 1fps

- The RTMP(UHD) transmission mode (Transmission priority) cannot be selected.

- **When "Streaming mode" is set to "SRT(H.265)"**

Settings		H.265(1)	H.265(2)	H.264(1)	H.264(2)	H.264(3)	H.264(4)	JPEG(1)	JPEG(2)	JPEG(3)
Resolution		1920×1080 1280×720	—	—	—	—	—	1920×1080 1280×720 640×360 320×180	640×360 320×180	640×360 320×180
Frame rate	System frequency 59.94Hz	60fps 30fps	—	—	—	—	—	30fps 15fps 5fps 1fps	30fps 15fps 5fps 1fps	30fps 15fps 5fps 1fps
	System frequency 50Hz	50fps 25fps	—	—	—	—	—	25fps 12.5fps 5fps 1fps	25fps 12.5fps 5fps 1fps	25fps 12.5fps 5fps 1fps
	System frequency 29.97Hz	30fps	—	—	—	—	—	30fps 15fps 5fps 1fps	30fps 15fps 5fps 1fps	30fps 15fps 5fps 1fps
	System frequency 25Hz	25fps	—	—	—	—	—	25fps 12.5fps 5fps 1fps	25fps 12.5fps 5fps 1fps	25fps 12.5fps 5fps 1fps
	System frequency 24/23.98Hz	—	—	—	—	—	—	—	—	—

- The SRT(H.265) transmission mode (Transmission priority) cannot be selected.
- It is not possible to select SRT(H.265) mode when the system frequency is 24/23.98Hz.
- You cannot make settings above the resolution and frame rate set by the system format.

Parts and their functions (continued)

• **When “Streaming mode” is set to “SRT(H.265 UHD)”**

Settings		H.265(1)	H.265(2)	H.264(1)	H.264(2)	H.264(3)	H.264(4)	JPEG(1)	JPEG(2)	JPEG(3)
Resolution		3840×2160	—	—	—	—	—	1920×1080 1280×720 640×360 320×180	640×360 320×180	640×360 320×180
Frame rate	**System frequency 59.94Hz**	30fps	—	—	—	—	—	30fps 15fps 5fps 1fps	30fps 15fps 5fps 1fps	30fps 15fps 5fps 1fps
	System frequency 50Hz	25fps	—	—	—	—	—	25fps 12.5fps 5fps 1fps	25fps 12.5fps 5fps 1fps	25fps 12.5fps 5fps 1fps
	System frequency 29.97Hz	30fps	—	—	—	—	—	30fps 15fps 5fps 1fps	30fps 15fps 5fps 1fps	30fps 15fps 5fps 1fps
	System frequency 25Hz	25fps	—	—	—	—	—	25fps 12.5fps 5fps 1fps	25fps 12.5fps 5fps 1fps	25fps 12.5fps 5fps 1fps
	System frequency 24/23.98Hz	—	—	—	—	—	—	—	—	—

• The SRT(H.265 UHD) transmission mode (Transmission priority) cannot be selected.
• It is not possible to select SRT(H.265 UHD) mode when the system frequency is 24/23.98Hz.

• **When “Streaming mode” is set to “SRT(H.264)”**

Settings		H.265(1)	H.265(2)	H.264(1)	H.264(2)	H.264(3)	H.264(4)	JPEG(1)	JPEG(2)	JPEG(3)
Resolution		—	—	1920×1080 1280×720	—	—	—	1920×1080 1280×720 640×360 320×180	640×360 320×180	640×360 320×180
Frame rate	**System frequency 59.94Hz**	—	—	60fps 30fps 15fps 5fps	—	—	—	30fps 15fps 5fps 1fps	30fps 15fps 5fps 1fps	30fps 15fps 5fps 1fps
	System frequency 50Hz	—	—	50fps 25fps 12.5fps 5fps	—	—	—	25fps 12.5fps 5fps 1fps	25fps 12.5fps 5fps 1fps	25fps 12.5fps 5fps 1fps
	System frequency 29.97Hz	—	—	30fps 15fps 5fps	—	—	—	30fps 15fps 5fps 1fps	30fps 15fps 5fps 1fps	30fps 15fps 5fps 1fps
	System frequency 25Hz	—	—	25fps 12.5fps 5fps	—	—	—	25fps 12.5fps 5fps 1fps	25fps 12.5fps 5fps 1fps	25fps 12.5fps 5fps 1fps
	System frequency 24/23.98Hz	—	—	—	—	—	—	—	—	—

• The available options for the SRT(H.264) transmission mode (Transmission priority) are limited to 30fps or lower (excluding 24fps).
• It is not possible to select SRT(H.264) mode when the system frequency is 24/23.98Hz.
• You cannot make settings above the resolution and frame rate set by the system format.

Parts and their functions (continued)

- **When “Streaming mode” is set to “SRT(H.264 UHD)”**

Settings		H.265(1)	H.265(2)	H.264(1)	H.264(2)	H.264(3)	H.264(4)	JPEG(1)	JPEG(2)	JPEG(3)
Resolution		—	—	3840×2160	—	—	—	1920×1080 1280×720 640×360 320×180	640×360 320×180	640×360 320×180
Frame rate	**System frequency 59.94Hz**	—	—	60fps 30fps	—	—	—	30fps 15fps 5fps 1fps	30fps 15fps 5fps 1fps	30fps 15fps 5fps 1fps
	System frequency 50Hz	—	—	50fps 25fps	—	—	—	25fps 12.5fps 5fps 1fps	25fps 12.5fps 5fps 1fps	25fps 12.5fps 5fps 1fps
	System frequency 29.97Hz	—	—	30fps	—	—	—	30fps 15fps 5fps 1fps	30fps 15fps 5fps 1fps	30fps 15fps 5fps 1fps
	System frequency 25Hz	—	—	25fps	—	—	—	25fps 12.5fps 5fps 1fps	25fps 12.5fps 5fps 1fps	25fps 12.5fps 5fps 1fps
	System frequency 24/23.98Hz	—	—	—	—	—	—	—	—	—

- The SRT(H.264 UHD) transmission mode (Transmission priority) cannot be selected.
- It is not possible to select SRT(H.264 UHD) mode when the system frequency is 24/23.98Hz.

- **When “Streaming mode” is set to “NDI|HX”**

Settings		NDI|HX	JPEG(1)
Resolution		1920×1080 1280×720	1280×720 640×360 320×180
Frame rate	**System frequency 59.94Hz**	60fps 30fps 15fps 5fps	30fps 15fps 5fps 1fps
	System frequency 50Hz	50fps 25fps 12.5fps 5fps	25fps 12.5fps 5fps 1fps
	System frequency 29.97Hz	30fps 15fps 5fps	30fps 15fps 5fps 1fps
	System frequency 25Hz	25fps 12.5fps 5fps	25fps 12.5fps 5fps 1fps

- It is not possible to select NDI|HX mode when the system frequency is 24/23.98Hz.
- The transmission mode (Transmission priority) cannot be selected.
- You cannot make settings above the resolution and frame rate set by the system format.

Parts and their functions (continued)

• **When “Streaming mode” is set to “High bandwidth NDI”**

Settings		H.265(1)	H.265(2)	H.264(1)	H.264(2)	H.264(3)	H.264(4)	JPEG(1)	JPEG(2)	JPEG(3)
Resolution		—	—	—	—	—	—	1920×1080 1280×720 640×360 320×180	—	—
Frame rate	**System frequency 59.94Hz**	—	—	—	—	—	—	30fps 15fps 5fps 1fps	—	—
	System frequency 50Hz	—	—	—	—	—	—	25fps 12.5fps 5fps 1fps	—	—
	System frequency 29.97Hz	—	—	—	—	—	—	30fps 15fps 5fps 1fps	—	—
	System frequency 25Hz	—	—	—	—	—	—	25fps 12.5fps 5fps 1fps	—	—
	System frequency 24/23.98Hz	—	—	—	—	—	—	24fps 12fps 4fps 1fps	—	—

• You cannot make settings above the resolution and frame rate set by the system format.

Parts and their functions (continued)

Wireless remote control: AW-RM50G (optional accessory)

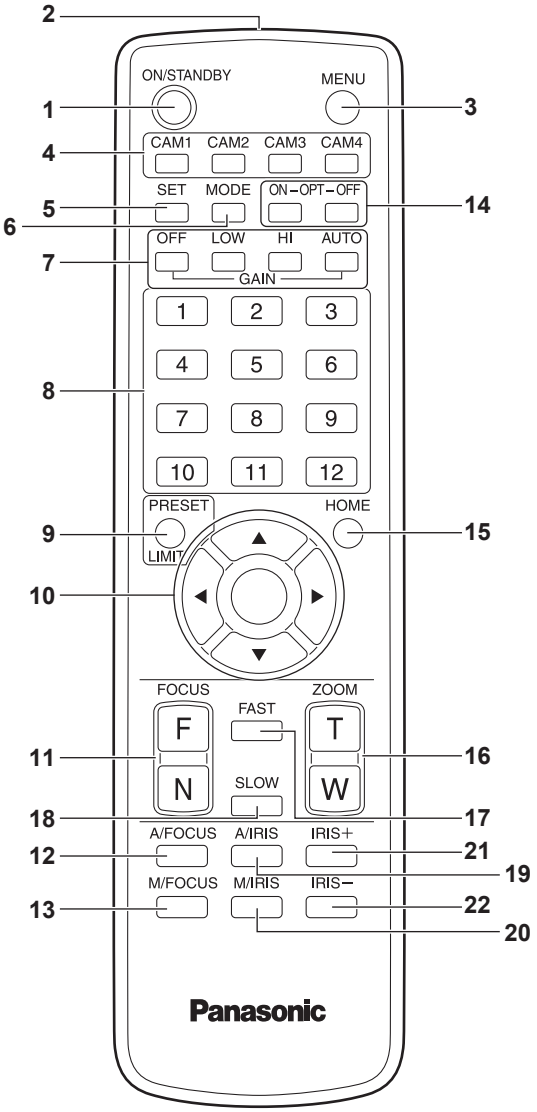

1. ON/STANDBY button <ON/STANDBY>
Each time this is pressed for 2 seconds, operation switches between turning on the unit's power and establishing the standby status.

2. Signal transmission window

3. MENU button <MENU>
Each time this is pressed for 2 seconds, operation switches between displaying the unit's camera menu and exiting the camera menu.
When it is pressed quickly (for less than 2 seconds) while a camera menu is displayed, the setting change is canceled.
Furthermore, the pan and tilt movement range limits (limiters) are set and released by operating the <MENU> button, <PRESET/LIMIT> button and the pan/tilt buttons (<▲> <▼> <◀> <▶>).
For details, refer to the Operating Instructions (PDF) → "Setting/ releasing the limiters".

4. CAM1 to CAM4 buttons
<CAM1> <CAM2> <CAM3> <CAM4>
Selects a camera to be operated.
Once a button has been selected, the unit corresponding to the selected button can be operated.

5. SET button <SET>
If this button is held down for 2 seconds when the [AWB A] memory or [AWB B] memory has been selected for the white balance adjustment, the black balance is adjusted automatically and registered in the memory selected.
When this button is pressed for under 2 seconds, only the white balance is adjusted automatically.

6. MODE button <MODE>
This is used to select the video signals which are output from the unit. Each time it is pressed, the signals are switched between the color bar signals and camera video signals.
<NOTE>
- When [Audio] is set to [On] and the color bar is displayed, a test sound (1 kHz) is output. Be cautious of the volume on external devices.

7. GAIN button <OFF> <LOW> <HI> <AUTO>
These are used to set the gain.
The gain increase can be set in three steps using the <OFF>, <LOW> and <HI> buttons.
<LOW> is set to 9 dB, and <HI> is set to 18 dB.
When the <AUTO> button is pressed, the AGC function is activated, and the gain is adjusted automatically depending on the light quantity.
The maximum gain of the AGC function can be set using the camera menu.

8. Preset memory call buttons <1> to <12>
These are used to call the information on the unit's directions and other settings, which have been registered in the unit's preset memories No.1 to No.12, and reproduce those settings.
Settings in preset memories No.13 and above cannot be called from the wireless remote control.

9. PRESET/LIMIT button <PRESET/LIMIT>
This is used to register the settings in the preset memories or set or release the limiters.
When a preset memory call button is pressed while the <PRESET/ LIMIT> button is held down, the information on the unit's current direction and other settings is registered in the call button.
Preset memory call buttons <1> to <12> correspond to the unit's No.1 to No.12 preset memories.
Furthermore, the pan and tilt movement range limits (limiters) are set and released by operating the <PRESET/LIMIT> button, <MENU> button and the pan/tilt buttons (<▲> <▼> <◀> <▶>).
For details, refer to the Operating Instructions (PDF) → "Setting/ releasing the limiters".

10. Pan-tilt buttons and menu operation buttons
<▲> <▼> <◀> <▶> <○>
1) These are used to change the unit's direction.
The unit is tilted in the up/down direction using the <▲> and <▼> buttons and panned in the left/right direction using the <◀> and <▶> buttons.
The <○> button does not work during tilting and panning.
When the <▲> or <▼> and <◀> or <▶> buttons are pressed at the same time, the unit moves diagonally.
2) The buttons are used for menu operations when the unit displays the camera menus.
Use the <▲>, <▼> (<◀>, <▶>) buttons to select the menu items.
When a selected item has a sub-menu, the sub-menu will be displayed by pressing the <○> button.
When the cursor is aligned with a particular item and the <○> button is pressed on the setting menu at the bottom hierarchical level, the setting of the selected item blinks.
When the <○> button is pressed after the setting has been changed using the <▲> and <▼> (<◀> and <▶>) buttons, the setting stops blinking, and the new setting is entered.
A setting for a regular menu item is reflected immediately if it is changed while it is still flashing.
If the <MENU> button is pressed quickly (for less than 2 seconds) while the setting is in the blinking status, the change will be canceled, and the setting selected prior to the change will be restored.

<NOTE>
- To prevent malfunctioning, there are a number of menu items ([Scene], [Format] and [Frequency]) whose setting is not reflected immediately even if it is changed while it is still flashing.
It is reflected only after the <○> button has been pressed, causing the setting to stop flashing and the new setting to be entered.
- A confirmation screen appears before the settings of some menu items are to be entered.

Parts and their functions (continued)

11.FOCUS button <F> <N>
These are used to adjust the lens focus manually when the manual setting is established for the lens focus.
The focus is adjusted in the far using the <F> button and in the near using the <N> button.

12.A/FOCUS button <A/FOCUS>
This is used when automatically adjusting the lens focus.

13.M/FOCUS button <M/FOCUS>
This is used when manually adjusting the lens focus.
The FOCUS buttons (<F> and <N>) are used when performing the actual adjustment.

14.OPT button <ON> <OFF>
Turn night mode on/off.
<NOTE>
- In night mode, video output will be in black and white. In addition, the iris will be forcibly opened.
- White balance adjustment is not possible in night mode.
- ND filter switching is not possible in night mode.

15.HOME button <HOME>
When this is pressed for 2 seconds, the unit's direction (panning or tilting) returns to the reference position.

16.ZOOM button <T> <W>
These are used to adjust the lens zoom.
The zoom is adjusted in the wide-angle using the <W> button and in the telephoto using the <T> button.

17.FAST button <FAST>
This is used to change the movement speed at which the panning, tilting, zooming and focusing operations are performed to the high speed.
When the button is tapped, the movement speed can be set to the normal high-speed operation. When the button is held down, it can be set to an even faster high-speed operation. Tap the button to return the movement speed to the normal high-speed operation.
<NOTE>
- The operating speed for panning and tilting when the preset memory settings have been called can be changed using the "Preset Speed" item of the camera menu.

18.SLOW button <SLOW>
This is used to change the movement speed at which the panning, tilting, zooming and focusing operations are performed to the low speed.
When the button is tapped, the movement speed can be set to the normal low-speed operation. When the button is held down, it can be set to an even slower low-speed operation. Tap the button to return the movement speed to the normal low-speed operation.

19.A/IRIS button <A/IRIS>
This establishes the setting for adjusting the lens iris automatically in line with the light quantity.

20.M/IRIS button <M/IRIS>
This establishes the setting for adjusting the lens iris manually.
The <IRIS +> and <IRIS –> buttons are used when performing the actual adjustment.

21.IRIS + button <IRIS +>
This is used to adjust the lens iris in the opening direction.

22.IRIS – button <IRIS –>
This is used to adjust the lens iris in the closing direction.

Setting the remote control IDs

The wireless remote control (optional accessory) is capable of operating up to four units.
IDs are used to set which units are selected when the <CAM1>, <CAM2>, <CAM3> and <CAM4> buttons on the wireless remote control have been pressed.

- When operating a multiple number of these units using wireless remote controls, set a different remote control ID for each control.
- When using one unit, set the remote control ID to "CAM1" unless the setting needs to be changed.

■ Setting procedure

Operate the IR ID switches on the unit's rear panel, and select "CAM1", "CAM2", "CAM3" or "CAM4" as the remote control ID. (→ page 52)
The IR ID switch settings "CAM1" to "CAM4" correspond to the <CAM1> to <CAM4> buttons on the wireless remote control.
(The factory setting is "CAM1".)

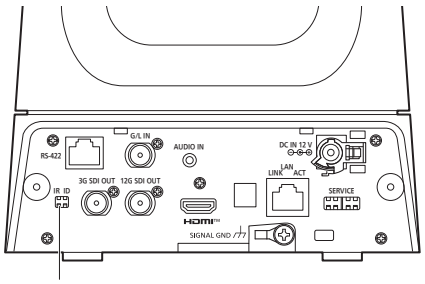

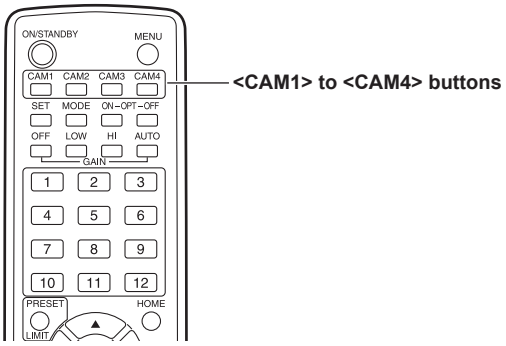

Network settings

Use the Easy IP Setup Software to establish the unit's settings

The settings related to the unit's network can be established using the Easy IP Setup Software.
You can obtain Easy IP Setup Software (EasyIPSetup.exe) by downloading it from the following website.
https://pro-av.panasonic.net/en/

To establish the settings for a multiple number of units, the settings must be selected for each camera involved.
If the settings cannot be established using the Easy IP Setup Software, select the settings separately for the unit and personal computer on the Network setup screen [Network] of the setting menu. (Operating Instructions (PDF) → "Web screen configurations" → "Network setup screen [Network]")

<NOTE>

- If, after the network settings have been established, another device in the same network has the same IP address, the network operations will not be performed properly.
  Set the IP address in such a way that it does not duplicate an existing IP address.
- Do not establish network settings from a multiple number of Easy IP Setup Software programs at the same time for a single camera.
  Similarly, do not perform the "Auto IP setting" operation of the remote camera controller AW-RP150 or AW-RP60 at the same time.
  The IP address settings may no longer be recognized as a result.
- To enhance the security of the Easy IP Setup Software, it will not be possible to make network settings for the target camera once about 20 minutes or more have elapsed after turning the power of the camera on. (Operating Instructions (PDF) → "Web screen configurations" → "Network setup screen [Network]" → "Common (to IPv6/IPv4)" → "Easy IP Setup accommodate period")
- The Easy IP Setup Software cannot be used from a different subnet via a router.
- Use Easy IP Setup Software ver. 4.25R00 or newer.

1. Start the Easy IP Setup Software.

2. Click the [Search] button.

3. Click the MAC address/IPv4 address of the camera to be set, and click the [Network Settings] button.

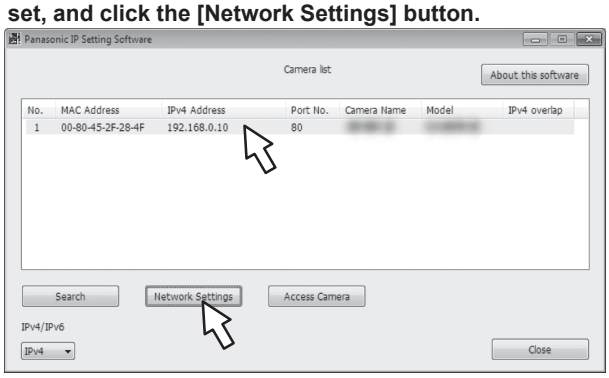

<NOTE>

- When a DHCP server is being used, the IP address allocated to the unit can be checked by clicking the [Search] button of the Easy IP Setup Software.
- If the same IP address is used for any additional cameras, the numbers of the additional cameras will be displayed in the [IPv4 overlap] column of the cameras concerned.
- When the [Access Camera] button is clicked, the Live screen of the selected camera is displayed.
- This unit supports an IPv4/IPv6 switching function.

4. Input the network items, and click the [Save] button.

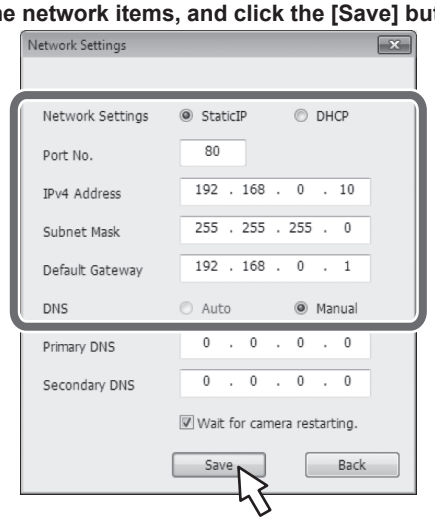

<NOTE>

- When a DHCP server is being used, [DNS] of the Easy IP Setup Software can be set to [Auto].
- After the [Save] button is clicked, it takes about 1 minute for the settings in the unit to be completed. If the AC adaptor or LAN cable is disconnected before the settings are completed, the settings will be canceled. In this case, repeat the steps to establish the settings.
- When a firewall (including software) has been introduced, enable access to all the UDP ports.

Use the Easy IP Setup Software Version.2 to establish the unit's settings

The settings related to the unit's network can be established using the Easy IP Setup Software Version.2.
You can obtain Easy IP Setup Software Version.2 (EasyIPSetupV2.exe) by downloading it from the following website.
https://pro-av.panasonic.net/en/

If the settings cannot be established using the Easy IP Setup Software Version.2, select the settings separately for the unit and personal computer on the Network setup screen [Network] of the setting menu. (Operating Instructions (PDF) → "Web screen configurations" → "Network setup screen [Network]")

<NOTE>

- If, after the network settings have been established, another device in the same network has the same IP address, the network operations will not be performed properly.
  Set the IP address in such a way that it does not duplicate an existing IP address.
- Do not establish network settings from a multiple number of Easy IP Setup Software Version.2 programs at the same time for a single camera.
  Similarly, do not perform the "Auto IP setting" operation of the remote camera controller AW-RP150 or AW-RP60 at the same time.
  The IP address settings may no longer be recognized as a result.
- To enhance the security of the Easy IP Setup Software Version.2, it will not be possible to make network settings for the target camera once about 20 minutes or more have elapsed after turning the power of the camera on. (Operating Instructions (PDF) → "Web screen configurations" → "Network setup screen [Network]" → "Common (to IPv6/IPv4)" → "Easy IP Setup accommodate period")
- The Easy IP Setup Software Version.2 cannot be used from a different subnet via a router.

■ Network Settings

1. Start the Easy IP Setup Software Version.2.

2. Click the [Search] button.

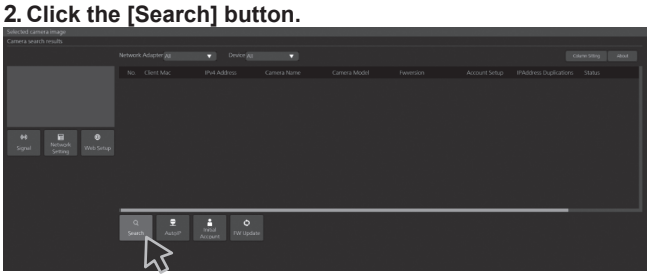

3. Click the camera to be set, and click the [Network Settings] button.

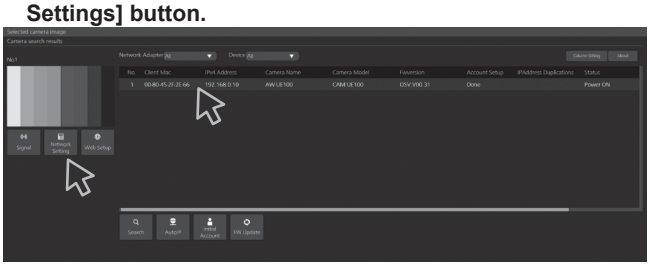

<NOTE>

- When a DHCP server is being used, the IP address allocated to the unit can be checked by clicking the [Search] button of the Easy IP Setup Software Version.2.
- If the same IP address is used for any additional cameras, the numbers of the additional cameras will be displayed in the [IPv4 overlap] column of the cameras concerned.
- When the [Access Camera] button is clicked, the Live screen of the selected camera is displayed.
- This unit supports an IPv4/IPv6 switching function.

4. Input the network items, and click the [OK] button.

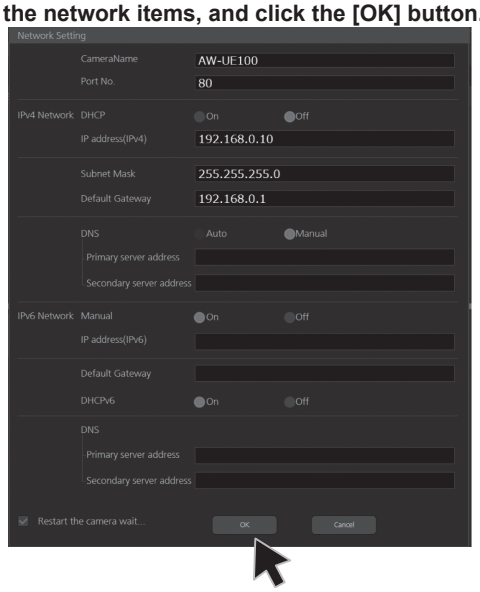

■ Automatically assigning IP addresses

1. Start the Easy IP Setup Software Version.2.

2. Click the [Auto IP] button.

<NOTE>

- Care must be taken when this function is used because network settings made manually are overwritten as the IP addresses for the remote cameras connected within the same network are automatically assigned.

■ Updating the firmware

1. Start the Easy IP Setup Software Version.2.

2. Click the [FW Update] button.

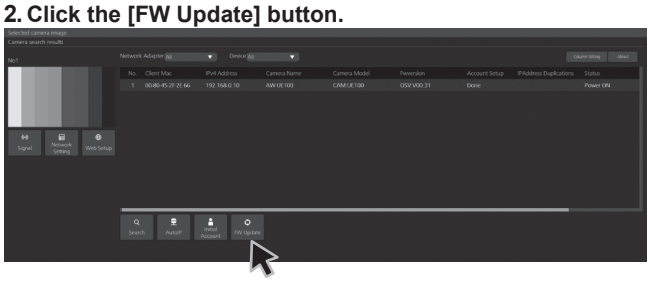

3. From the displayed list, select the terminal for which you want to update the firmware, then press the [OK] button.

■ Registering user accounts

1. Start the Easy IP Setup Software Version.2.

2. Click the [Initial Account] button.

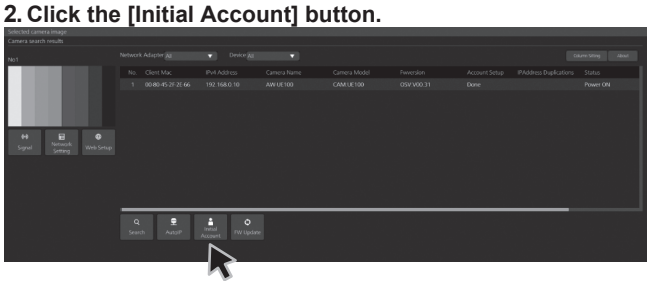

3. Select the camera for which you want to register a user, enter the account name and password, and then press the [OK] button.

■ Selecting the network interface

1. Start the Easy IP Setup Software Version.2.

2. From the Network Adaptor pull-down menu, select the network adaptor that will detect the camera.

Setting the initial account

1. Set the initial account.

In the initial state, the initial account setting screen is displayed when the web screen is displayed.
Set a user name and password. (Operating Instructions (PDF) → “Displaying the web screen” → “Displaying the web screen using a personal computer”)

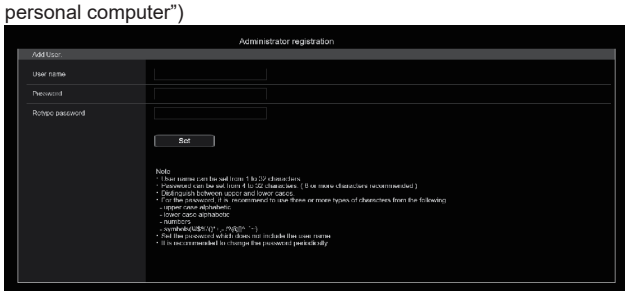

<NOTE>

- Do not set character strings that can be easily guessed by third parties.
- Change the password at regular intervals.
- The password must use at least 3 of the following 4 character types and be 8 characters or longer.
  Alphabet upper cases
  Alphabet lower cases
  Numerals
  Symbols (! # $ % ’ ( ) + , - . / = ? @ [ ] ^ _ ’ { } ~)
- When a password is set that does not adhere to the above policy, take responsibility for use of the device with due consideration for the security risks in the installation environment, etc.
- A warning is displayed if the set password goes against the recommended setting policy. When changing the password, click the [Back] button and set the password again.
  When continuing with the setting with full understanding of the security risks, click [Continue] to complete the setting.
- If you forget the account information that was set, use the switches for initialization of service switches to reset the user information used for connecting to the network. (→ page 52)

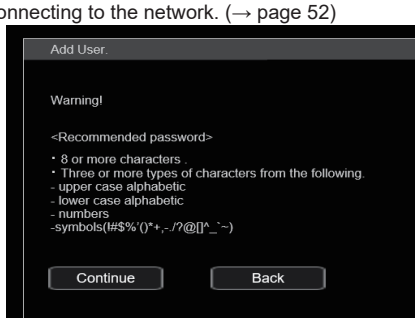

2. Completing registration of the initial account

After completing registration of the initial account, the following registration completed screen is displayed.
The live screen [Live] is automatically displayed after about 10 seconds elapse after the completed screen is displayed.
If the live screen [Live] is not displayed after 10 seconds elapse, manually move to the live screen [Live] by clicking the “please click here” link.

This completes the process of registering the initial account.

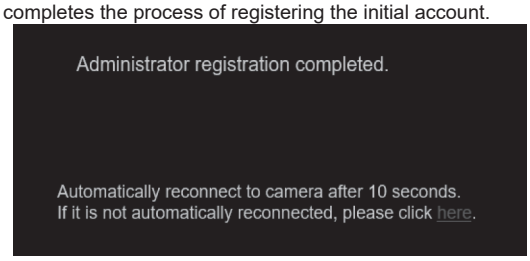

<NOTE>

- Network connection with AW-RP150 or AW-RP60 requires setup of an initial account.
  When an initial account is not set up, AW-RP150 or AW-RP60 can detect but cannot control this unit.

Installing the plug-in viewer software

To view IP images from the unit on Windows Internet Explorer 11, the "Network Camera View 4S" plug-in viewer software (ActiveX®) must be installed.
The plug-in viewer software can be installed directly from the unit.

<NOTE>

- [Automatic installation of viewer software] is set to [On] at the time of purchase, allowing you to install directly from the unit. If a message appears in the web browser's information bar, see page 75.
- When you display the Live screen [Live] on the personal computer for the first time, the installation screen for the plug-in viewer software (ActiveX) appears. Follow the instructions on the screen to perform installation. (only when using Windows Internet Explorer 11)
- If the plug-in viewer software (ActiveX) installation screen continues to appear when switching screens, even after it is installed, restart the personal computer.
- A license is required for the plug-in viewer software for each personal computer on which it is installed. You can view the number of times the plug-in viewer software was automatically installed in the Operating Instructions (PDF) → “Web screen configurations” → “Maintenance screen [Maintenance]” → “Product information screen [Product info.]”. For details on licenses, consult your local dealer.
- To uninstall the plug-in viewer software, select [Control Panel] - [Programs] - [Uninstall a program] in Windows, and remove "Network Camera View 4S".

How to turn the power on and off

Turning the power on

When performing operations from a wireless remote control

1. Set all the power switches of the units and devices connected in the system to ON.
- This unit does not have a power switch.
  When power is supplied to it, the status display lamp will light orange, and the unit is set to the Standby mode.

<NOTE>
- Under factory default conditions, the unit will be in Standby mode when power is supplied for the first time. (Status display lamp: Lit orange)
- When the power supply is cut off while the unit is in Standby mode, the unit will be in Standby mode the next time power is supplied. (Status display lamp: Lit orange)
- When the power supply is cut off while the unit is in Power ON mode, the unit will be in Power ON mode the next time power is supplied. (Status display lamp: Lit green)

2. Press one of the <CAM1> to <CAM4> buttons on the wireless remote control to select the unit.

3. Press the <ON/STANDBY> button on the wireless remote control for about 2 seconds.
The Power ON mode is established, images are output, and control can be exercised.
- The unit's status display lamp now lights up green.

<NOTE>
- It takes maximum 30 seconds per unit for the initial settings operation to be completed. During this period, the unit cannot be operated.
  (Status display lamp: Lit orange)

4. If a multiple number of units are going to be used, repeat steps 2 and 3 as required.

The unit's status display lamp blinks green when a signal matched by the remote control ID has been received, and it blinks orange when a signal that is not matched by the remote control ID has been received.

<NOTE>
- When operation is transferred to the Standby mode:
  The current zoom, focus and iris positions are stored in the memory (Power ON preset).
- When operation is transferred to the Power ON mode:
  The zoom, focus and iris are adjusted to the positions which were stored in the memory (Power ON preset) when operation was transferred to the Standby mode.

When performing operations from a controller

When using an AW-RP150 or AW-RP60
For details, refer to the operating instructions for the controller.

When using a commercially available controller
For details, refer to the operating instructions for the controller.

Turning the power off

When performing operations from a wireless remote control

1. Press one of the <CAM1> to <CAM4> buttons on the wireless remote control to select the unit.

2. Press the <ON/STANDBY> button on the wireless remote control for about 2 seconds.
The unit enters Standby mode.
- The unit's status display lamp now lights up orange.

3. If a multiple number of units are going to be used, repeat steps 1 and 2 as required.

4. Set all the power switches of the units and devices connected in the system to OFF.
- This unit does not have a power switch.

<NOTE>
- When operation is transferred to the Standby mode:
  The current zoom, focus and iris positions are stored in the memory (Power ON preset).
- When operation is transferred to the Power ON mode:
  The zoom, focus and iris are adjusted to the positions which were stored in the memory (Power ON preset) when operation was transferred to the Standby mode.

When performing operations from a controller

When using an AW-RP150 or AW-RP60
For details, refer to the operating instructions for the controller.

When using a commercially available controller
For details, refer to the operating instructions for the controller.

Troubleshooting

■ Operation

Symptom	Cause and solution	Reference pages
No power	• **Is the AC adaptor securely connected to the AC outlet?**	– – –
	• **If the power plug of the AC adaptor connected properly?**	– – –
	• **Is the LAN cable connected securely to the LAN connector for IP control <LAN LINK/ACT>?**	page 51
	• **Is the network cable for the PoE++ (IEEE 802.3bt compliant) compatible power supply device and the unit connected properly?**	page 24
	• **Power may not be supplied if the total power limit is exceeded on power supply devices that allow connections to multiple PoE++ terminals.** → For details, refer to the operating instructions for the PoE++ power supply device.	– – –
	• **If the unit is connected to the controller, has it been connected properly?** → For details, refer to the operating instructions for the controller.	page 21
	• **When performing operations from a wireless remote control** → Also refer to the “Cannot operate using the wireless remote control” item.	– – –
Cannot operate (common to wireless remote control, controller)	• **Is the power on?** → If the unit’s status display lamp is off or lights up orange, it means that the unit’s power is not on.	page 66
	• **The safe mode function may have been activated.**	Operating Instructions (PDF) → “Safe mode”
	• **Have the limiter functions been set?**	Operating Instructions (PDF) → “Limiters” to “Setting/releasing the limiters”
	• **Has the unit you want to operate been selected properly?**	Operating Instructions (PDF) → “Selecting the units”
Cannot operate using the wireless remote control	• **Have the remote control’s batteries run down or have the batteries been installed with their polarities reversed?** → If the status display lamp does not blink even when the wireless remote control is operated near the wireless remote control signal light-sensing area, it means that the batteries have run down. Replace the batteries.	– – –
	• **Have the IR ID switches been set correctly?**	page 52, page 62
	• **Is there a fluorescent light or plasma monitor near the unit and, if so, is the wireless remote control signal light-sensing area exposed to its light?**	page 49
Cannot operate using the controller	• **Is the unit connected to the controller properly?** → For details, refer to the operating instructions for the controller.	page 21
	• **It may be necessary to upgrade the version of the controller so that the controller will support the unit.** → For details on upgrading, visit the support page on the following website. https://pro-av.panasonic.net/en/	– – –
The unit turns in the opposite direction to the one operated	• **Has the stand-alone (Desktop) installation setting been selected correctly?**	Operating Instructions (PDF) → “Camera menu items” → “Pan/Tilt 1/2 screen” → “Install Position” Operating Instructions (PDF) → “Web screen configurations” → “Basic screen [Basic]” → “System screen [System]” → “Pan/Tilt” → “Install Position”
	• **The reversal setting may have been established at the controller if the unit is connected to the controller.** → For details, refer to the operating instructions for the controller.	– – –

Troubleshooting (continued)

Symptom	Cause and solution	Reference pages
Cannot access from a web browser	• **Has a LAN cable of category 5e or above been connected to the LAN connector for IP control <LAN LINK/ACT>?**	pages 22 to 24
	• **Is the [LINK] LED of the LAN connector for IP control lit?** → If it is not lit, it means that something is wrong with the connection to the LAN or that the network at the connection destination is not working properly. Check the LAN cable for defective contacts, and check the wiring.	pages 22 to 24
	• **Is the power on?** → If the unit's status display lamp is off or lights up orange, it means that the unit's power is not on.	page 66
	• **Has a valid IP address been set in the unit?**	Operating Instructions (PDF) → "Web screen configurations" → "User management screen [User mng.]" → "Host authentication screen [Host auth.]" → "Add host" → "IP address"
	• **Has the wrong IP address been accessed?** → Check the connections by following the steps below. **For Windows:** Using the Windows command prompt, execute > ping [IP address which has been set in the camera] A reply returned from the unit signifies that there are no problems in operation. If a reply is not received, try following operation: • Reboot the unit, and within 20 minutes change the IP address using the Easy IP Setup Software. **For Mac:** Using the macOS terminal, execute > ping -c 10 [IP address which has been set in the camera] A reply returned from the unit signifies that there are no problems in operation.	– – –
	• **Are you accessing via "http://" while the HTTPS function is enabled?** → Perform access via "https://" when using the HTTPS function. Entry of the port number is also required.	Operating Instructions (PDF) → "Web screen configurations" → "Network setup screen [Network]" → "Setting the Connection Method"
	• **Is the same IP address setting being used by another unit?** → Check out the IP addresses of the unit, access devices (personal computer, controller, etc.) and any other cameras.	Operating Instructions (PDF) → "Camera menu items" → "IP Network screen" → "IP Address"
	• **Does the subnet mask setting match the network subnet of the connection destination?** → Check out the subnet mask settings of the unit and access devices, and then consult with the network administrator.	Operating Instructions (PDF) → "Camera menu items" → "IP Network screen" → "Subnet Mask"
	• **Has the "Use a proxy server" setting been selected by the web browser? (When the unit and the personal computer are connected to the same subnet)** → If a proxy server has been set using the [proxy setting] of the web browser, it is recommended that a "Don't use proxy" address be selected as the unit's IP address setting.	– – –
	• **Has the wrong default gateway been set for the unit? (When the unit and personal computer are connected to different subnets)** → Check out the default gateway that has been set for the unit, and then consult with the network administrator.	Operating Instructions (PDF) → "Camera menu items" → "IP Network screen" → "Default Gateway"

Troubleshooting (continued)

Symptom	Cause and solution	Reference pages
The settings on the web setting screen [Setup] are not updated or displayed properly	**For Windows:** • **Press the [F5] key on the keyboard of the personal computer to request that the settings be acquired.** **For Mac:** • **Press the [Command] + [R] key on the personal computer's keyboard to request that the settings be acquired.**	– – –
	• **Perform the following to delete the temporary Internet files.** **For Windows:** ① Select [Tools] - [Internet Options] in Internet Explorer. ② Click the [General] tab, and click the [Delete] button under [Browsing history]. ③ In the [Delete Browsing History] dialog box, select the [Temporary Internet files and website files] checkbox, and then click [Delete]. ④ Click the [OK] button. **For Mac:** ① Select [Develop] - [Empty Cache] in Safari. ② Click [Empty] in the [Are you sure you want to empty the cache?] pop-up screen.	– – –
	For Windows: • **If [Check for newer versions of stored pages] is not set to [Every time I visit the webpage] in the temporary Internet file settings, the web setup screen may not appear.** → Perform the following. ① Select [Tools] - [Internet Options] in Internet Explorer. ② Click the [General] tab, and click the [Settings] button under [Browsing history]. ③ In the [Temporary Internet Files] dialog box, select the [Every time I visit the webpage] option under [Check for newer versions of stored pages]. ④ Click the [OK] button.	– – –
	• **The unit's ports may be filtered by the firewall or other function of the anti-virus software.** → Change the HTTP port number of the unit to a port number that will not be filtered.	– – –
It is not possible to download the setting files	**For Windows:** • **Has the file download function been disabled?** → Perform the following. ① Select [Tools] - [Internet Options] in Internet Explorer. ② Click the [Security] tab, and click the [Custom level] button under [Security level for this zone]. ③ In the [Security Settings] dialog box, select the [Enable] option for [File download]. ④ Click the [OK] button. ⑤ Click the [OK] button.	– – –
The tally lamps do not light	• **Is the [Tally] setting set to [Disable]?** → If [Tally] is set to [Disable], the unit's tally lamp does not light. Change the setting to [Enable].	Operating Instructions (PDF) → "Camera menu items" → "Output 5/5 screen" → "Tally" Operating Instructions (PDF) → "Web screen configurations" → "Basic screen [Basic]" → "System screen [System]" → "Output" → "Tally"

Troubleshooting (continued)

Symptom	Cause and solution	Reference pages
Status display lamp does not light	• **Is the [Status Lamp] setting set to [Disable]?** → If [Status Lamp] is set to [Disable], the status display lamp does not light when this unit is working properly. Change the setting to [Enable].	Operating Instructions (PDF) → “Camera menu items” → “Output 5/5 screen” → “Status Lamp” Operating Instructions (PDF) → “Web screen configurations” → “Basic screen [Basic]” → “System screen [System]” → “Output” → “Status Lamp”
The authentication screen appears repeatedly	• **Has the user name or password been changed?** → If you change the user name and password of the user currently logged in from a separate web browser while the unit is being accessed, the authentication screen appears each time the screen display is changed. Close the web browser, and initiate access to the unit again.	Operating Instructions (PDF) → “Web screen configurations” → “User management screen [User mng.]” → “User authentication screen [User auth.]” → “Add user” → “User name” “Password” “Retype password”
	• **Has the method for user authentication been changed?** → If you change the [User auth.] - [Authentication] setting, close the web browser and initiate access again.	Operating Instructions (PDF) → “Web screen configurations” → “User management screen [User mng.]” → “User authentication screen [User auth.]” → “Mode” → “Authentication”
Screens displays take a while to appear	• **Is access being performed in HTTPS mode?** **Screen displays may take a while to appear in HTTPS mode due to signal processing.**	– – –
	• **Is the unit on the same local network and being accessed via proxy?** → Configure the web browser settings so that access is not performed via proxy.	– – –
	• **Are multiple users accessing the unit's IP images at the same time?** → When multiple users access the unit's IP images at the same time, images may take some time to appear, and the frame rate of the IP images may drop.	– – –

Troubleshooting (continued)

■ Video

Symptom	Cause and solution	Reference pages
No pictures are displayed or the pictures are disturbed	• **Has the unit been connected properly to the other connected devices?**	pages 20 to 24
	• **If the system is configured in such a way that the picture is also switched when the unit to be operated is selected, has the correct unit been selected?**	Operating Instructions (PDF) → “Selecting the units”
	• **Has the image signal setting been selected correctly?**	Operating Instructions (PDF) → “Camera menu items” → “System 1/2 screen” → “Format” Operating Instructions (PDF) → “Web screen configurations” → “Basic screen [Basic]” → “System screen [System]” → “Format”
	• **Are external sync signals that are supported by the video signal format which has been set being input?**	page 51
The picture is flipped vertically	• **Has the stand-alone (Desktop) installation setting been selected correctly?**	Operating Instructions (PDF) → “Camera menu items” → “Pan/Tilt 1/2 screen” → “Install Position” Operating Instructions (PDF) → “Web screen configurations” → “Basic screen [Basic]” → “System screen [System]” → “Pan/Tilt” → “Install Position”
Multiple color bands (color bars) are displayed	• **Switch to the camera picture.**	Operating Instructions (PDF) → “What to do when encountering problems in the basic shooting operations”
The menu screen is displayed	• **Exit the camera menu.**	Operating Instructions (PDF) → “Basic setup operations”
It is difficult to view the menu screens	• **Depending on the HDMI monitor you are using, you may experience one or more of the symptoms described below.** • The resolution of the characters in the camera menu displays changes as the background image changes. • Depending on the edge enhancement setting established for the monitor, white lines appear in front of the black shadows of the camera menus. • Depending on the edge enhancement setting established for the monitor, the background colors may be superimposed onto the white parts of the camera menus.	– – –
No auto focusing	• **Is the focus set to manual?** → Auto focusing is initiated as soon as the focus is set to auto.	Operating Instructions (PDF) → “What to do when encountering problems in the basic shooting operations”
	• **In some situations, it may be hard to focus at the auto setting.** → In cases like this, select the manual setting, and focus manually.	Operating Instructions (PDF) → “Manual shooting” → “Manually adjusting the focus”
The subject is not brought into focus during zooming when the manual setting is used for the focus	• **Was the focus adjusted at the Tele end?** → First adjust the focus at the Tele end where the focusing accuracy is higher, and then proceed with the zooming.	– – –
	• **Under some operating conditions, it may be hard to bring subjects into focus.** → In such cases, use the focus at the auto setting.	Operating Instructions (PDF) → “What to do when encountering problems in the basic shooting operations”
Focusing is not possible in night mode	• **Are you shooting with visible light?** → The focus position is different due to the difference in refractive index between visible light and infrared light. Wavelengths near 850 nm are assumed for infrared light in night mode on this unit. Perform manual adjustment if necessary.	Operating Instructions (PDF) → “Manual shooting” → “Manually adjusting the focus”
1080/29.97PsF images appear jerky	• **This is normal operation.** → In the PsF (Progressive segmented Frame) format, an identical image is captured to fields 1 and 2 in order to output the same image as progressive. Therefore, the image will appear slightly jerky.	– – –

Troubleshooting (continued)

Symptom	Cause and solution	Reference pages
1080/25PsF images appear jerky	• **This is normal operation.** → In the PsF (Progressive segmented Frame) format, an identical image is captured to fields 1 and 2 in order to output the same image as progressive. Therefore, the image will appear slightly jerky.	– – –
Something is wrong with the coloring of the pictures	• **Activate the ATW (Auto tracking white adjustment) function.**	Operating Instructions (PDF) → “White balance adjustment” → “Auto tracking white adjustment (ATW)”
	• **In some situations, the proper colors may not be reproduced using the ATW function.** → In cases like this, proceed with the white balance adjustment.	Operating Instructions (PDF) → “White balance adjustment”
The pictures are too light or too dark	• **Either select the auto setting for the iris or select the manual setting and adjust the iris manually.**	Operating Instructions (PDF) → “Manual shooting” → “Manually adjusting the iris”
	• **The pictures may be dark if the analog video signal cables are too long because this will cause signal attenuation.**	– – –
Images are in black and white	• **Is the unit in night mode?** → In night mode, output will be in black and white.	Operating Instructions (PDF) → “Camera menu items” → “Brightness 2/2 screen” → “Day/Night” Operating Instructions (PDF) → “Web screen configurations” → “Image screen [Image/Audio]” → “Image adjust screen [Image adjust]” → “Brightness” → “Day/Night”
Auto white balance adjustment (AWB) is not possible	• **Is the unit in night mode?** → Auto white balance adjustment (AWB) is not possible in night mode.	Operating Instructions (PDF) → “Camera menu items” → “Brightness 2/2 screen” → “Day/Night” Operating Instructions (PDF) → “Web screen configurations” → “Image screen [Image/Audio]” → “Image adjust screen [Image adjust]” → “Brightness” → “Day/Night”
The screen is too bright in night mode	• **The aperture is set to open in night mode to prevent video voyeurism. Adjust the brightness at the light source.**	Operating Instructions (PDF) → “Manual shooting” → “Manually adjusting the iris”
The iris does not operate in night mode.		
The subjects appear distorted	• **Since this camera uses an MOS imaging device, the pickup timing differs slightly at the top left and bottom right of the screen. This means that if a subject moves quickly across the front of the camera, it may appear slightly distorted. This is not a malfunction.**	– – –
When the flash is fired during shooting, only the top or bottom of the screen becomes lighter	• **With a MOS imaging sensor, the pickup timing differs slightly at the top left and bottom right of the screen. This means that when the flash is fired, the bottom of the screen will become lighter in the field concerned and the top will become lighter in the next field.** **This is normal and not indicative of any problem.**	– – –
The brightness changes cyclically or the colors change, and horizontal stripes can be seen passing across the screen	• **These phenomena (flicker) may occur under the illumination produced by fluorescent lighting, mercury bulbs or other types of discharge tubes. In such cases, we recommend setting the electronic shutter speed to 1/100 in regions with 50 Hz power supply frequency, and to OFF in regions with 60 Hz power supply frequency.**	– – –
When fine lines or cyclical patterns are shot, flickering is seen or coloring is added to them	• **This phenomenon occurs because the pixels are arranged systematically on each image sensor. It is noticeable when the spatial frequency of a subject and the pixel pitch are brought into proximity so change the camera angle or take other action.**	– – –
Noise occurs in the audio input	• **The following causes are possible.** - The camera, switching hub, or peripheral devices are not grounded. - Power lines are running nearby. - Equipment generating strong electric or magnetic fields (e.g., television and radio antennas, air conditioning motors, power transformers) are located nearby. If the problem cannot be resolved via movement of surrounding devices, use a microphone equipped with an amplifier, or connect an audio output with low output impedance.	page 43

Troubleshooting (continued)

■ IP images

Symptom	Cause and solution	Reference pages
Images are not displayed	**For Windows:** • **Is the plug-in viewer software installed?** → Install the plug-in viewer software.	page 65
	For Windows: • **If [Check for newer versions of stored pages] is not set to [Every time I visit the webpage] in the temporary Internet file settings, IP images may not appear in the live screen [Live].** → Perform the following. ① Select [Tools] - [Internet Options] in Internet Explorer. ② Click the [General] tab, and click the [Settings] button under [Browsing history]. ③ In the [Temporary Internet Files] dialog box, select the [Every time I visit the webpage] option under [Check for newer versions of stored pages]. ④ Click the [OK] button.	– – –
The images are blurry	• **Is the focus properly adjusted?** → Check the focus adjustment.	– – –
Images are not updated	• **The images may not be updated and other problems may occur depending on your web browser and its version.** • **The images may stop depending on the network congestion, the level of access to the unit, etc.** • **If the IP video settings of the unit were changed, the image display may stop temporarily.** → Check the level of access to the unit, and stop any unnecessary access. Afterward, check the following. **For Windows:** Press the [F5] key on the personal computer's keyboard to request that the settings be acquired. **For Mac:** Press the [Command] + [R] key on the personal computer's keyboard to request that the settings be acquired.	– – –
The images do not update or display properly	• **Perform the following to delete the temporary Internet files.** **For Windows:** ① Select [Tools] - [Internet Options] in Internet Explorer. ② Click the [General] tab, and click the [Delete] button under [Browsing history]. ③ In the [Delete Browsing History] dialog box, select the [Temporary Internet files and website files] checkbox, and then click [Delete]. ④ Click the [OK] button. **For Mac:** ① Select [Develop] - [Empty Cache] in Safari. ② Click [Empty] in the [Are you sure you want to empty the cache?] pop-up screen.	– – –
	• **The unit's ports may be filtered by the firewall or other function of the anti-virus software.** → Change the HTTP port number of the unit to a port number that will not be filtered.	– – –

Troubleshooting (continued)

Symptom	Cause and solution	Reference pages
H.264 images are not displayed	• **If the "Network Camera View 4S" plug-in viewer software is deleted in an environment where the "Network Camera View 3" plug-in viewer software is installed, display of H.264 images will become impossible. In such cases, delete "Network Camera View 3" before installing "Network Camera View 4S".**	– – –
	• **Has the camera been connected to a personal computer via a router (via the Internet, for example)?** → If UDP port transfer has not been set correctly, H.264 images cannot be displayed. H.264 can be transferred by HTTP when [Internet mode(Over HTTP)] is set to [On]. • **Has UDP communication been blocked by security software or a firewall?** → If [Internet mode(Over HTTP)] is [Off], H.264 is transferred by UDP. → Change the settings in the security software and firewall, and change the settings to permit communications with your web browser.	Operating Instructions (PDF) → "Web screen configurations" → "Image screen [Image/Audio]" → "IP video settings screen [Video over IP]" → "H.264" → "Internet mode(Over HTTP)"
The images are distorted	• **The images may be distorted if the transmission path is congested and proper transmission is not possible.** → Consult your network administrator.	– – –
	• **The images may be distorted if video packet shuffling occurs on the transmission path.** → Switching to an identical Internet service provider for both the camera and the personal computer may prevent this problem. Consult your network administrator.	– – –
When multiple web browsers are running to display H.264 images, images from multiple cameras appear sequentially in a single web browser	**For Windows:** • **This may occur depending on the combination of the personal computer's display adaptor and the driver.** → If this occurs, update the first display adaptor to the latest version. If this does not resolve the problem, adjust the hardware accelerator function as follows. This section describes the procedure for Windows 10 as an example. Changing the settings may not be possible, depending on your environment. ① Right-click on the desktop, and select [Display settings] from the menu. ② Click [Advanced display settings]. ③ Select the [Troubleshooting] tab, and click [Change Settings]. ④ Change to [Hardware acceleration] setting to [disable] at the far left, and click [OK].	– – –
Audio is not output for NDI|HX-compatible switchers	• **[Audio] may be set to [Off] in the [Audio] audio setting screen.** → Reset the setting to [On].	Operating Instructions (PDF) → "Web screen configurations" → "Image screen [Image/Audio]" → "Audio setting screen [Audio]" → "Audio" → "Audio"
Images stop in applications that support High bandwidth NDI	• **When a personal computer and this unit are connected via a commercially available USB LAN conversion adaptor, the images may stop due to network problems on the personal computer side.** → If this phenomena occurs, firstly disable the network adaptor that is connecting the personal computer to this unit, then change [Streaming mode] in [Video over IP] to [H.264]. After this, re-enable the network adaptor that you disabled and the images will be output when you change the [Streaming mode] to [High bandwidth NDI].	Operating Instructions (PDF) → "Web screen configurations" → "Image screen [Image/Audio]" → "IP video settings screen [Video over IP]" → "Streaming mode"

Troubleshooting (continued)

■ Web screen

Depending on the OS installed on the personal computer, the following may occur. Follow the instructions below when the following has occurred.
Performing the following solutions will not affect the operation of other applications.

For Windows:

The “information bar” described in the following explanations refers to the message bars that appear in Internet Explorer 11.
The information bar appears at the bottom of Internet Explorer.

Symptom	Cause and solution	Reference pages
The following message appears in the information bar. "This website wants to run the following add-on: 'WebVideo Module' from 'Panasonic System Networks Co., Ltd.'."	• **Select [Allow].**	– – –
The following message appears in the information bar. "This website wants to install the following add-on: 'nwcv4SSetup.exe' from 'Panasonic System Networks Co., Ltd.'."	• **Select [Install]. When the security warning window appears, click the [Install] button.**	– – –
An unnecessary status bar or scroll bar is displayed on the pop-up window	• **Open the security settings screen for Internet Explorer, and select [Internet]. Click the [Custom level] button, set [Allow script-initiated windows without size or position constraints] to [Enable] under [Miscellaneous], and click the [OK] button. When the warning window appears, click the [Yes] button.**	– – –
The IP images do not match the display frames	• **Images may not appear correctly if their DPI settings are 120 DPI or higher.** → Right-click on the desktop of the personal computer, click [Display settings] - [Change the size of text, apps, and other items], and select [100% (Recommended)].	– – –
	• **Images may not appear correctly if the magnification level of Internet Explorer's zoom function is not set to 100%.** → Select [View] - [Zoom] in the menu bar of Internet Explorer, and click [100%].	– – –
The layout of the screen is distorted, or some buttons on the screen do not operate	• **Select [Tools] - [Compatibility View Settings] in the menu bar of Internet Explorer, disable compatibility view for the unit.**	– – –

Specifications

For details on specifications, visit the Panasonic website (https://pro-av.panasonic.net/manual/en/index.html) and refer to the Operating Instructions.

Power requirements:
12 V DC ⎓ (10.8 V to 13.2 V) (Supplied AC adaptor)
42 V to 57 V DC ⎓ (PoE++ power supply)
Current consumption:
3.0 A (Supplied AC adaptor)
1.0 A (PoE++ power supply)

indicates safety information.

■ GENERAL

Ambient operating temperature:
0 °C to 40 °C (32 °F to 104 °F)

Storage temperature:
–20 °C to 50 °C (–4 °F to 122 °F)

Ambient operating humidity:
20% to 90% (no condensation)

Mass: Approx. 2.2 kg (4.84 lb) (excluding cable cover, mount bracket)
Approx. 2.3 kg (5.06 lb) (including cable cover, excluding mount bracket)

Dimensions (W × H × D):
169.2 mm×204.6 mm×170.6 mm
(6-21/32 inches × 8-1/16 inches × 6-23/32 inches)
(excluding protrusions, cable cover, mount bracket)

Index

Numerics

3G SDI ACTIVE THRU OUT 21
3G SDI OUT connector 52
12G SDI OUT connector 52

A

Accessories 46
AUDIO IN connector 51

C

Cable clamp 52
Camera head 50

D

DC IN connector 52
Direct ceiling mount bracket 9
Drop-prevention wire 10, 50

E

Easy IP Setup Software 63
External sync signal input format 51

G

G/L IN connector 51
Ground connector 52
Grounding 43

H

HDMI connector 52
Hole for securing the camera pedestal 50

I

Initial account 65
Install Position 8
IP video transmission output 54
IR ID switches 52, 62

L

LAN connector for IP control 51

M

Mount bracket 9
Mount bracket for installation surface 50

N

NDI|HX compatible switcher 20

O

Optional accessories 46
Output conditions for each video format 53

P

Pan head 50
Plug-in viewer software 65
Power 66
Power cable 46

R

Remote control IDs 62
RS-422 connector 51

S

Service switches 52
Status display lamp 50

T

Tally lamp 50
Tripod screw holes 52

V

Ventilation holes 50

W

Wireless remote control 49, 61, 62
Wireless remote control signal light-sensing area 50
WV-Q105A 9

MEMO

Panasonic Entertainment & Communication Co., Ltd.
Web Site: https://pro-av.panasonic.net/en/

© Panasonic Entertainment & Communication Co., Ltd. 2020-2024