Panasonic

Operating Instructions

Excerpted Version

Installation Instructions provided

4K Integrated Camera

Model No. **AW-UE100WP**

Model No. **AW-UE100KP**

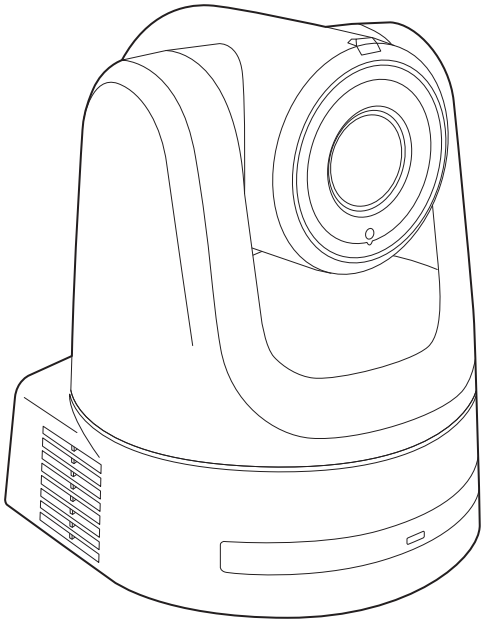

HEVC Advance™
Covered by patents at patentlist.accessadvance.com

HDMI™

ENGLISH Excerpted Version	Before installing and using this product, be sure to read “Read this first!” (pages 4, 25 to 26). This manual contains information excerpted from the Operating Instructions. For more information, please visit the Panasonic website **(https://pro-av.panasonic.net/manual/en/index.html)**, and refer to the Operating Instructions.
ESPAÑOL	Antes de instalar y usar este producto, asegúrese de leer “Lea esto primero!” (páginas 4 y 27). Si desea obtener más información, visite el sitio web de Panasonic **(https://pro-av.panasonic.net/manual/en/index.html)** y consulte las instrucciones de funcionamiento y las instrucciones de instalación.

Before operating this product, please read the instructions carefully and save this manual for future use.

PJ
SS0620RA3034 -FJ
Printed in Japan

ENGLISH
DVQX2119WA

Trademarks and registered trademarks

- Microsoft®, Windows®, Windows® 10, Microsoft Edge, Internet Explorer®, ActiveX® and DirectX® are either registered trademarks or trademarks of Microsoft Corporation in the United States and other countries.
- Apple, Mac, macOS, iPadOS, iPhone, iPad, and Safari are registered trademarks of Apple Inc., in the United States and other countries.
- Android™ and Chrome™ browser are trademarks of Google LLC.
- Intel® and Intel® Core™ are trademarks or registered trademarks of Intel Corporation in the United States and other countries.
- Adobe® and Reader® are either registered trademarks or trademarks of Adobe Systems Incorporated in the United States and/or other countries.
- The terms HDMI and HDMI High-Definition Multimedia Interface, and the HDMI Logo are trademarks or registered trademarks of HDMI Licensing Administrator, Inc. in the United States and other countries.
- NDI is a registered trademark of NewTek, Inc. in the United States.
- Other names of companies and products contained in these Operating Instructions may be trademarks or registered trademarks of their respective owners.

About copyright and licence

It is expressly prohibited to distribute, copy, disassemble, reverse compile, modify, reverse engineer, or export in violation of export laws the software provided with the unit.

Abbreviations

The following abbreviations are used in this manual.

- Windows® Internet Explorer® 11 32/64-bit is abbreviated to “Internet Explorer”.

For the purposes of this manual, the model numbers of the units are given as listed in the table below.

Model number of unit	Model number given in manual
AW-UE100WP	**AW-UE100**
AW-UE100KP	
AW-RP150G	**AW-RP150**
AW-RP60G	**AW-RP60**
AV-HLC100P	**AV-HLC100**
AV-UHS500P	**AV-UHS500**

Illustrations and screen displays featured in the manual

- What is shown in the manual’s illustrations and screen displays may differ from how it is actually appears.
- Functions which can be used by Windows Internet Explorer 11 only are indicated using the Windows I.E.11 mark.
- The screenshots are used in accordance with the guidelines of Microsoft Corporation.

Contents

Installation Instructions

Read this first! **4**

Lea esto primero! **4**

Installation precautions **5**

Before installation **7**
- IR ID switch settings 7
- Service switch settings 7

How to install and connect the unit **8**
- When using the WV-Q105A (optional accessory) 13

Removing the camera **14**

Stand-alone installation (when the mount bracket is going to be used) **15**

Stand-alone installation (when the mount bracket is not going to be used) **18**
- When installing the unit on a desktop 18
- When mounting the unit on a tripod 18

Connections **19**
- Connecting an NDI|HX compatible switcher 19
- Connections with a controller (AW-RP150) 20
- System example 1 (Serial control) 21
- System example 2 (IP control) 22
- System example 3 (IP image transmission, PoE++) 23
- System example 4 (NDI) 23

Appearance **24**

Operating Instructions

Read this first! **25**

Lea esto primero! **27**

Read this first! **28**
- Note on grounding 28

Before use **28**
- Overview 28
- Computer requirements 28
- Disclaimer of warranty 29
- Network security 29

Features **30**

Accessories **31**

Optional accessories **31**

Operating precautions **32**

Wireless remote control (optional accessory) **34**

Parts and their functions **35**
- Camera unit 35
- Wireless remote control: AW-RM50G (optional accessory) 46

Setting the remote control IDs **47**

Network settings **48**
- Use the Easy IP Setup Software to establish the unit's settings 48
- Use the Easy IP Setup Software Version.2 to establish the unit's settings 48
- Setting the initial account 50
- Installing the plug-in viewer software 50

How to turn the power on and off **51**
- Turning the power on 51
- Turning the power off 51

Troubleshooting **52**

Specifications **61**

Index **62**

Read this first!

ENGLISH

WARNING:
To prevent injury, this apparatus must be securely attached to the floor/wall in accordance with the installation instructions.

WARNING:
Installation should only be performed by qualified installation personnel.
Improper installation may result in the entire apparatus falling down and causing injury.

CAUTION:
This camera intended for use only with the Mount Bracket enclosed with the unit and Panasonic Direct Ceiling Mount Bracket, WV-Q105A.
Use with other apparatus is capable of resulting in instability causing possible injury.

CAUTION:
To reduce the risk of fire or electric shock, install making sure that the mounting screws do not come in contact with electrical wiring within the wall.

indicates safety information.

Lea esto primero!

ESPAÑOL

ADVERTENCIA:
Para evitar heridas, este aparato debe estar firmemente instalado al piso/pared de acuerdo con las instrucciones de instalación.

ADVERTENCIA:
La instalación solamente debe llevarla a cabo personal cualificado.
Una instalación incorrecta podría provocar la caída del dispositivo y causar lesiones.

PRECAUCIÓN:
Esta cámara ha sido diseñada para ser utilizada solamente con la ménsula de montaje suministrada con la unidad y con la ménsula de montaje directo en el techo de Panasonic modelo WV-Q105A.
La utilización con otros aparatos puede causar inestabilidad y posibles lesiones.

PRECAUCIÓN:
Para reducir el riesgo de incendio o descarga eléctrica, instálelo asegurándose de que los tornillos de montaje no entren en contacto con el cableado eléctrico dentro de la pared.

indica información de seguridad.

Installation precautions

Panasonic does not accept any responsibility for accident or damage during installation if procedure in this manual is not followed.

To installation personnel
Read the “Installation Instructions” thoroughly and then perform the operation correctly and safely.
Also, always read the “Read this first!” (→ page 4) of this manual as they contain important information.
After the installation, give the “Installation Instructions” to the customer to save for future use.

■ Ensure that the installation work complies with the technical standards governing electrical equipment.

■ This unit is for indoor use only.

It cannot be used outdoors.
Avoid installation in a location where the unit will be exposed to direct sunlight for extended periods or near a cooling or heating appliance. Otherwise, deformation, discoloration, malfunctioning and/or problems in operation may result. Operate the unit where it will not be splashed or sprayed by water.

■ Use the unit with an installation where the unit is suspended from an overhead surface or with a stand-alone installation.

Do not use the unit on its side or tilted at an angle.

<NOTE>
- Be absolutely sure to use the four bracket mounting screws (M4) for mounting the mount bracket. These are supplied with the unit.
  Do not use wood screws, nails, etc.
  In the case of a concrete ceiling, secure the unit using anchor bolts (for M4) or AY plug bolts (for M4).
  Recommended clamping torque
  M4 : 1.47 N · m {15 kgf · cm}
- The withdrawal strength of the mounting location for each screw must be at least 133 N {13.5 kgf}.
- When mounting the unit on a ceiling made of plasterboard, for instance, if it is not strong enough to support its weight, either reinforce the ceiling adequately or use the WV-Q105A direct ceiling mount bracket, which is sold separately.
- When using a mount bracket which is sold separately, read the handling instructions.
- Do not hold the camera head while undertaking the installation work. Doing so may cause malfunctioning.

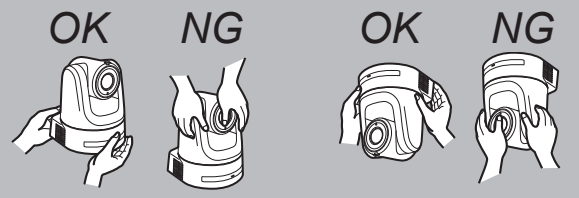

Desktop installation **Hanging installation**

■ Concerning the installation location

Install the unit in a stable location which will not be susceptible to shaking. If the unit is installed in a location which is susceptible to shaking, this will cause the unit’s images to shake in turn.
Install the unit after conferring in detail with your dealer.
Install the unit on a ceiling that is strong enough (such as a concrete ceiling).
If the unit is to be installed on a ceiling which is not strong enough, reinforce the ceiling sufficiently first.

Through the adoption of the Direct Drive system and Panasonic proprietary technology, we have achieved quietness and high precision in panning and tilting.
In order to get the most from the characteristics of the Direct Drive system, install in a stable location that does not shake and that has sufficient stiffness. Shaking of the installation location can be the cause of performance deterioration and malfunctions in the camera.

If the camera is installed in a location with insufficient stiffness, the pan and tilt control characteristics may be adversely affected, leading to unstable operation.
- In environments such as the following, there may be unusual operation sounds during pan and tilt, and operational errors may occur.
  If you are concerned about unstable pan and tilt operations after installation, please contact your dealer.

<Installation examples that may cause performance deterioration and malfunctions>
Ⓐ Single point attachment to a cylindrical pole structure that has a small diameter
Ⓑ Single point attachment to a movable structure

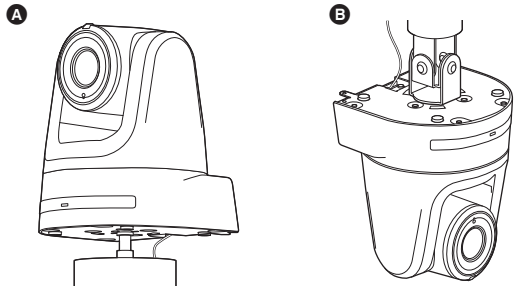

■ Do not install or use the unit in the following kinds of locations.

- On walls (where the unit would be installed sideways)
- In locations (including places such as under the eaves of a building) where the unit would be directly exposed to rain or water
- In locations such as kitchens where there are high concentrations of steam and grease
- In outdoor locations or hot places where the temperature will exceed 40 °C (104 °F)
- In cold locations where the temperature will drop below 0 °C (32 °F)
- In locations where the humidity will exceed 85%
- In locations where chemicals are used such as near swimming pools
- At sea, in coastal areas or in locations where corrosive gases are emitted
- In locations where radiation, X-rays, or strong radio waves or magnetic fields are generated
- In locations where the unit would be subject to a great deal of vibration such as on board a vehicle or ship (this unit is not designed to be used in vehicles)
- In locations where the temperature is subject to sudden changes such as near the air outlet of an air conditioner or near a door which allows the outside air to come in

AW-UE100 main unit	Mounting conditions					
	Applicable mount bracket			Mounting onto the ceiling		
Mass	Model No.	Mass	Mounting	Recommended screws	No. of screws	Minimum withdrawal strength (per screw)
Approx. 2.2 kg (4.84 lb) (excluding mount bracket) Cable cover Approx. 0.1 kg (0.22 lb)	Direct mount (supplied accessory)	Approx. 0.25 kg (0.55 lb)	Hanging/Desktop	M4 screws (supplied accessory)	4	133 N {13.5 kgf} • Ensure that the mounting strength can support a weight that is at least five times the total mass of the equipment, including the camera’s main unit.
	WV-Q105A (optional accessory)	Approx. 0.15 kg (0.33 lb)	For ceiling	M4 screws (supplied with the WV-Q105A)	4	

Installation precautions (continued)

What to avoid to ensure that the unit will perform stably over a prolonged period

- Using the unit for a prolonged period in a location with high temperature and humidity levels will cause its parts to deteriorate and shorten its service life.
- Ensure that a cooling unit or heating unit will not blow any air directly toward the installation location.

Be absolutely sure to use the supplied brackets and screws to install the camera.

- Do not mount the unit by employing any methods other than those specified.
- Do not remodel the mounting bracket or mounting screws provided with the unit.

Before installation, always disconnect the power plug

When installing, always use the supplied components.
Do not disassemble or modify the wall mount adaptor.

Tightening up the mounting screws

- Tighten up the screws and bolts securely to the degree that is appropriate for each of the materials used in the mounting location and structures.
- After tightening up the screws and bolts, check that there is no unsteadiness and that the parts have been tightened securely.
- Use the specified tools and tighten the screws firmly.
- Tighten up the screws using the specified torque driver. Do not use electrical drivers or impact drivers.

When the unit is no longer going to be used, do not leave it lying around, but be absolutely sure to dispose of it properly.

For details on how to remove the unit, refer to “Removing the camera” (→ page 14).

When installing, transferring or disposing of the unit, be absolutely sure to hold it by its pedestal area.

Problems may result if the camera head is held or rotated.

Do not attach a filter, hood, extender or other parts to the unit.

Use the dedicated AC adaptor and power cable provided with the unit.

Connect the AC adaptor and power cable to the power inlet securely.

Installing the AC adaptor

- Do not place the adaptor directly onto a ceiling panel or other such surface.
  Extreme danger is posed when water has collected on the surface as a result of leaking rain, for instance.
  Secure the adaptor firmly to the bottom or other surface of a reinforcing member made of channel steel where dust and other foreign matter will not accumulate. (→ page 13)
- Secure the adaptor firmly so that there will be no chance that it will fall off or fall down.
  Secure it using a strength which can withstand the mass of the AC adaptor.

Install the accessory AC adaptor near the main power outlet, and position it in such a way that its power plug can be plugged into and unplugged from the outlet easily.

When connecting the AC adaptor to a power outlet on the ceiling or on any other surface where dust may collect, wipe off the dust on the power plug at periodic intervals as an antitracking measure.

Power switch

This unit does not have a power switch. When the power is supplied, the pan, tilt, zoom and focusing operations are performed.*1 Before proceeding with maintenance, be absolutely sure to disconnect the power plug from the power outlet.

*1
- Under factory default conditions, the unit will be in Standby mode when power is supplied for the first time. (Status display lamp: Lit orange)
- When the power supply is cut off while the unit is in Standby mode, the unit will be in Standby mode the next time power is supplied. (Status display lamp: Lit orange)
- When the power supply is cut off while the unit is in Power ON mode, the unit will be in Power ON mode the next time power is supplied. (Status display lamp: Lit green)

(For details, refer to “How to turn the power on and off” (→ page 51).)

Connecting the power cable

Be absolutely sure to connect the power cable of the AC adaptor through a circuit breaker using one of the following methods.

(1) Connect the power cable through a power control unit.
(2) Connect the power cable to a circuit breaker in a power distribution panel with a contact distance of 3.0 mm (1/8 inches) or more.
Use a circuit breaker which is capable of shutting off all the poles of the main power supply with the exception of the protective ground conductor.
(3) Install the AC adaptor near the power outlet, and connect it through the power plug.

Grounding

Before operating the unit, check that SIGNAL GND has been securely grounded.

If there is a possibility of noise interference

Either wire the cables so that the power cable (ceiling light cord) of AC 100 V or more, and the signal cable are placed at least 1 meter (3.3 ft) apart.
Alternatively run each cable through its own metal conduit.
(The metal conduits must be grounded.)

Radio signal interference

If the unit is positioned near a TV or radio transmitting antenna or a strong electrical field or magnetic field (such as that generated by a motor, transformer or power lines), its images may be distorted and/or the images may be affected by noise.

When connecting the cables, ensure that the connector areas will not be subject to any load.

Doing so may cause malfunctioning.

Allowing the generated heat to escape

This unit allows the heat generated inside to escape from its surfaces.
Do not install the unit in a location where it will be surrounded by walls or other surfaces and where heat will be trapped.
In addition, the heat is dissipated to the bottom panel which will warm up over time: This is normal and not indicative of any trouble.

PoE++ power supplies

Use a PoE++ (IEEE 802.3bt compliant) compatible hub or power supply device.

Network settings

The network function of this unit does not work unless an initial account is set up (except when using the Easy IP Setup Software (→ page 48)). A personal computer is required to set up an initial account. (→ page 50)

<NOTE>

- Network connection with AW-RP150 or AW-RP60 requires setup of an initial account. (→ page 50)
  When an initial account is not set up, AW-RP150 or AW-RP60 can detect but cannot control this unit.

Before installation

Be sure to configure the switches on the connector panel and bottom of the unit before installing it.
Configuring the switches after the unit is installed may prove difficult.

IR ID switch settings

The IR ID switches are located on the connector panel of the unit.

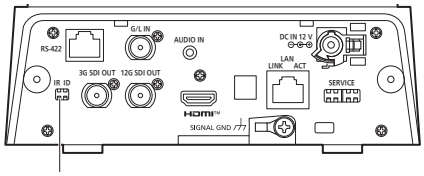

IR ID switch

CAM1	CAM2	CAM3	CAM4
IR ID	IR ID	IR ID	IR ID

These are used to select the ID of the wireless remote control (optional accessory). (→ page 47)
The IR ID switch settings “CAM1” to “CAM4” correspond to the <CAM1> to <CAM4> buttons on the wireless remote control.

Service switch settings

The service switches are located on the connector panel of the unit.
Perform switch settings before turning the unit on.

Service switch

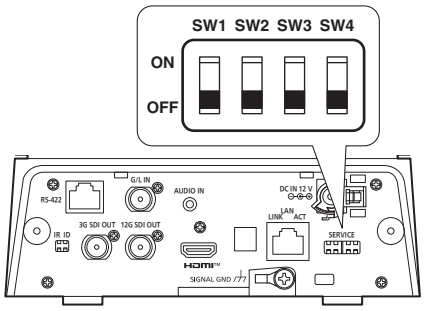

Function		Factory settings
SW1	Switches for initialization (Refer to the explanations in “Initialization 1” and “Initialization 2”)	OFF
SW2	Always leave at OFF (used for factory adjustments)	OFF
SW3		OFF
SW4		OFF

Initialization 1
- Reset the user authentication settings and host authentication settings for network connection.
  (This will delete all the registered user information (IDs/passwords) and host information (IP addresses).)
- With the IR ID switches and service switches set as shown below, turn on the power of the unit.

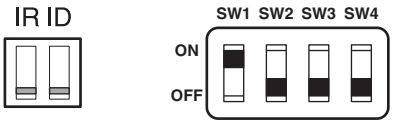

<NOTE>
When initialization is complete, the status display lamp on the front of the unit blinks green. Set the service switches back to their original positions (SW1 to SW4 all OFF), then restart the unit.

Initialization 2
- The unit is reset to the state it was in at the time of purchase. (All camera menu setting values and network setting values are reset.)
- With the IR ID switches and service switches set as shown below, turn on the power of the unit.

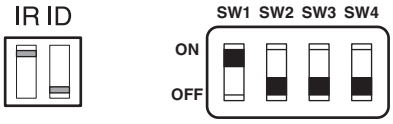

<NOTE>
- When initialization is complete, the status display lamp on the front of the unit blinks green. Set the service switches back to their original positions (SW1 to SW4 all OFF), then restart the unit.

■ Setting the installation method (“Desktop” or “Hanging”) from the OSD menu

Set “Desktop” or “Hanging” in [Install Position] on the [Pan/Tilt 1/2] screen from the OSD menu of this unit.

```
## Pan/Tilt 1/2 ##

⇨Install Position          Desktop
 Smart Picture Flip            Off
  Flip Detect Angle          90deg
 P/T Speed Mode    Normal(60deg/s)
 P/T Acceleration Setting
 Speed With Zoom Position       On
 Focus Adjust With PTZ.        Off
 Privacy Mode                  Off

 Return
```

Install Position
[Desktop, Hanging]

[Desktop] or [Hanging] is selected here as the method used to install the unit.

Desktop	Stand-alone installation
Hanging	Suspended installation

<NOTE>
- When [Hanging] has been selected, the top, bottom, left and right of the images will be reversed, and up/down/left/right control for panning and tilting will also be reversed.

How to install and connect the unit

Be absolutely sure to read through the "Read this first!" (→ page 4) and "Installation precautions" (→ pages 5 to 6).

The procedure given here is for the kind of installation where the unit is suspended from an overhead surface, but the same steps are followed for a stand-alone installation.

If the ceiling panel is not strong enough to bear the unit's weight, use the kind of mount bracket that is supported by anchor bolts between the concrete ceiling and ceiling panel. The unit supports the WV-Q105A direct ceiling mount bracket which is used solely for combination cameras. Use this bracket to install the unit. (→ page 13)
In a case like this, the holes (ø 60 mm (ø 2-3/8 inches)) for installing the direct ceiling mount bracket on the ceiling must be drilled in the ceiling panel.
It is also recommended that you provide an inspection space or opening for access purposes in the area near where the equipment is installed in order to facilitate installation and the wiring connections work.
For details on supplied accessories, refer to the page 31.

1. Check the mounting space.

- Refer to the illustration, and determine where the unit is to be installed and in which direction it should be mounted. Factor in the unit mounting area and include space for the wires extending from its rear panel.
- The asterisk (∗) in the illustration marks the position and dimensions of the hole for mounting the mount bracket.

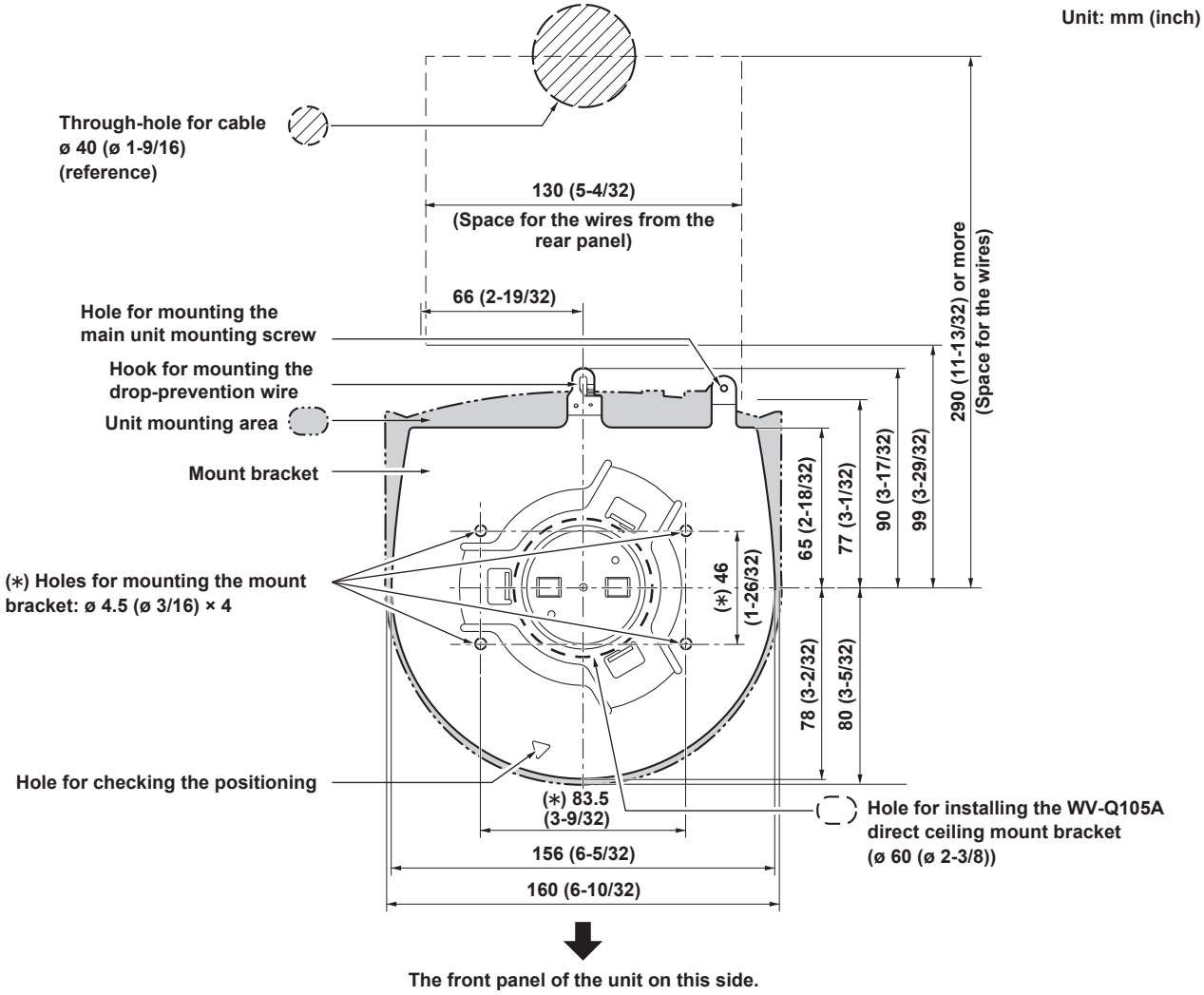

<NOTE>

- Before proceeding to install and connect the main unit, connect the LAN cable, HDMI cable and coaxial cables in the space above the ceiling panel, and then pass the cables through the cable holes.
- For a power outlet which is used on the ceiling, be absolutely sure to take measures to deal with the tracking that may be caused by the accumulation of dust and other foreign matter.

How to install and connect the unit (continued)

2. Mount the mount bracket onto the installation surface.

- Use the bracket mounting screws (M4, bind-head: 10 mm (13/32 inches) long) supplied with the unit.
- For proper clamping torque, securely attach the screws using the specified tools.

Screw diameter	Clamping torque
M4	1.47 N · m {15 kgf · cm}

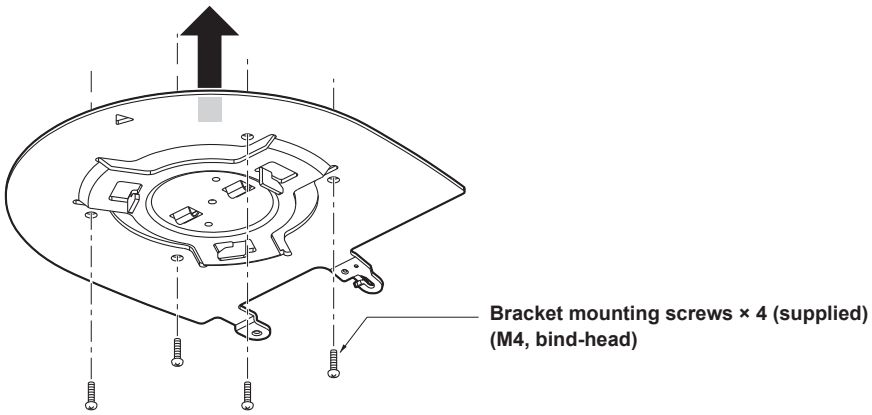

<NOTE>

- Use only the screws supplied with the unit. Do not use any other screws such as wood screws, nails, etc.

3. Attach the drop-prevention wire.

- Pull out the drop-prevention wire from the bottom panel of the unit, and engage the end with the wire ring through the hole of the mount bracket hook.
- Pull the drop-prevention wire, and check that it has been attached securely to the hook.

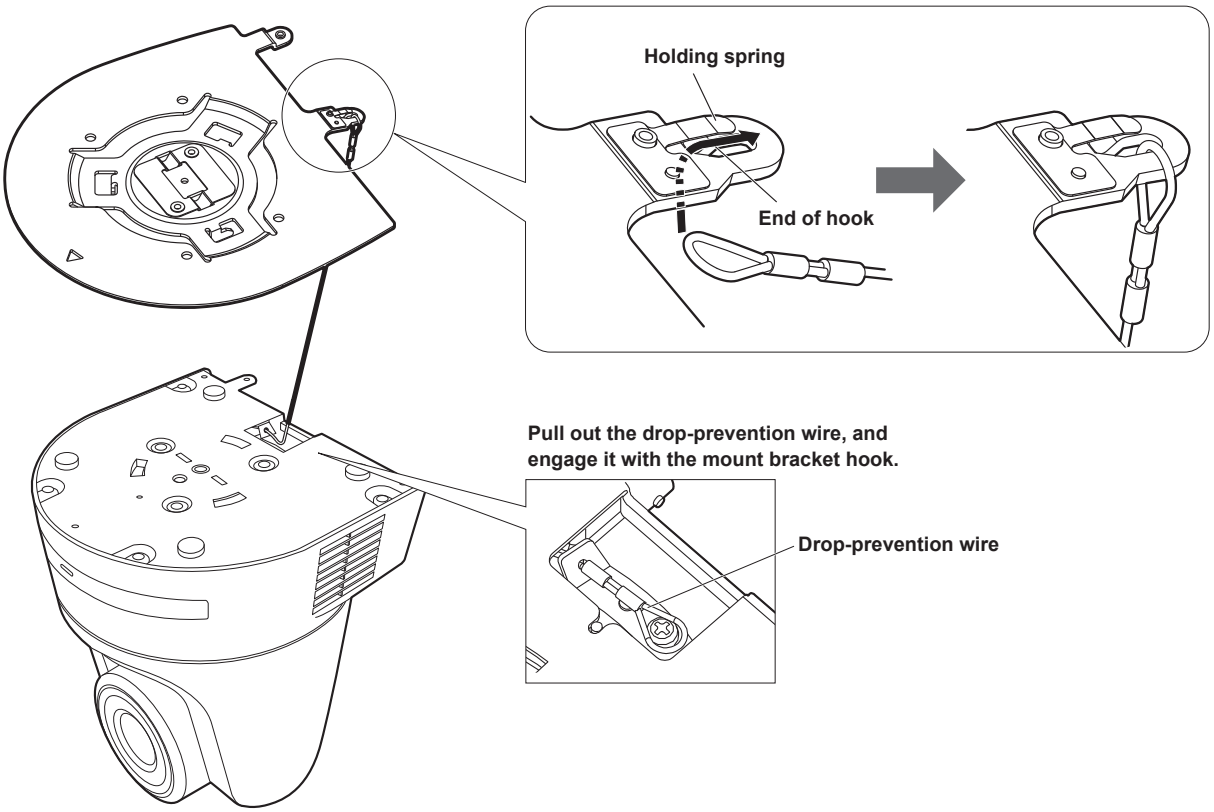

<NOTE>

- Do not do this work while holding the camera head since doing so may result in malfunctioning of the unit.
- The drop-prevention wire is designed to be used for installation where the unit is suspended from an overhead surface so do not subject it to the weight of units other than the unit.

How to install and connect the unit (continued)

4. Mount the unit.

- Align the position of the hole for checking the positioning with the status display lamp.
- Align the holes on the camera main unit used to insert the bottom panel with the protrusions on the mount bracket used for inserting the camera, push the bracket and camera firmly together, and rotate the main unit by about 15 degrees in the direction of the arrow.
- Secure the mount bracket to the unit using the main unit mounting screw (M3) as supplied.
- Attach the mount bracket securely with the prescribed tool using the clamping torque below.
- Be absolutely sure to verify that none of the screws are loose.

Screw diameter	Clamping torque
M3	0.78 N · m {8 kgf · cm}

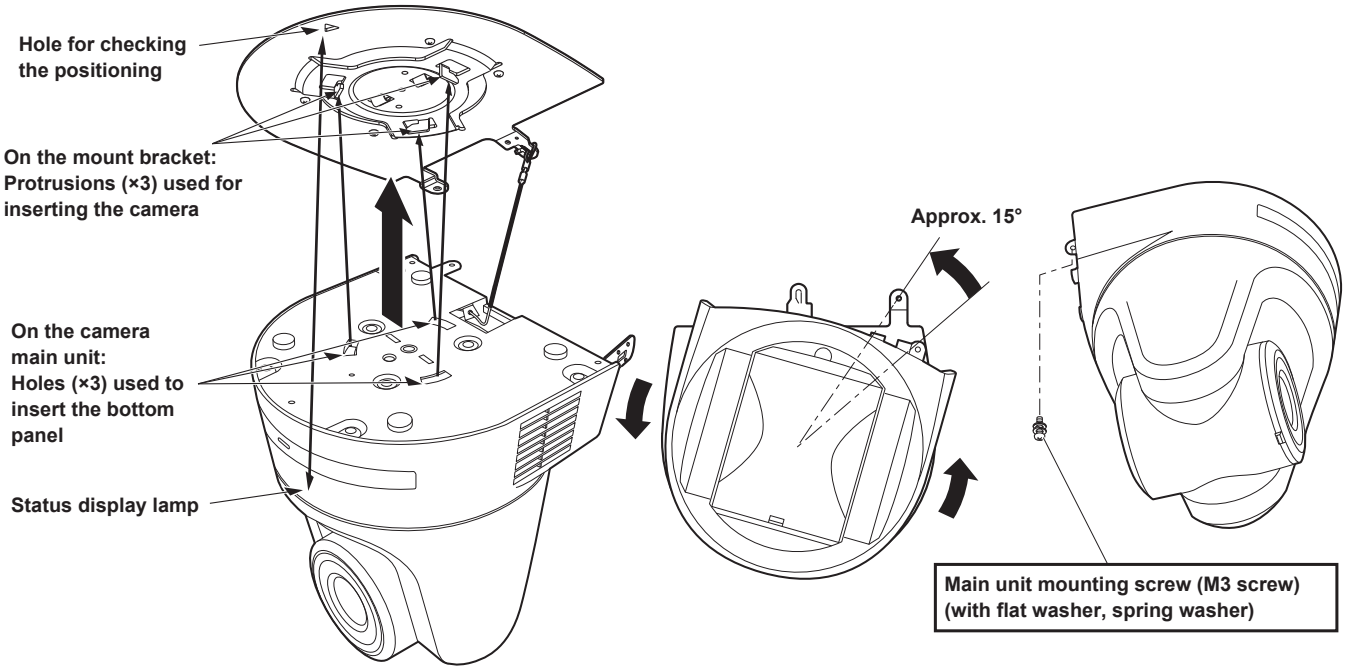

<NOTE>

- Do not do this work while holding the camera head since doing so may result in malfunctioning of the unit.
- Use only the screws supplied. Do not use any other screws.
- Check that the unit has been mounted securely with no tilting or wobbling.
- The unit must be secured without fail using the main unit mounting screw before any of the cables are connected.

5. Check the mounting.

Check out the following points.

- **The main unit mounting screw must be mounted securely.**
- **The unit must not tilt, and it must be mounted exactly.**
- **The unit must be securely installed.**
- **The unit pedestal part must not rotate even when an attempt is made to turn it.**

How to install and connect the unit (continued)

6. Connect the rear panel connectors.

Anchor the AC adaptor cable in place using the cable clamp.

<NOTE>

- Do not connect PoE cable to the RS-422 port.
- For details on recommended products, refer to the catalog or consult your local dealer.
- Always disconnect the power supply before connecting or disconnecting cables.
  Connecting or disconnecting cables while the power is turned on may result in malfunctions.

● How to secure the AC adaptor cable

① Loosely secure the cable clamp.

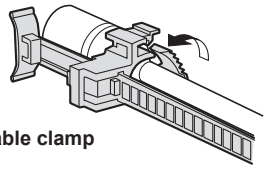

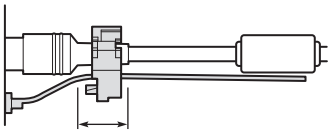

Loosely secure the cable clamp in the area shown above.

② Fasten the cable clamp.

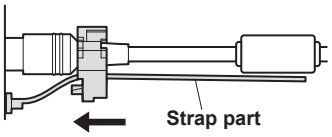

Take hold of the strap part, slide the cable clamp until it stops moving, and then secure it tightly.

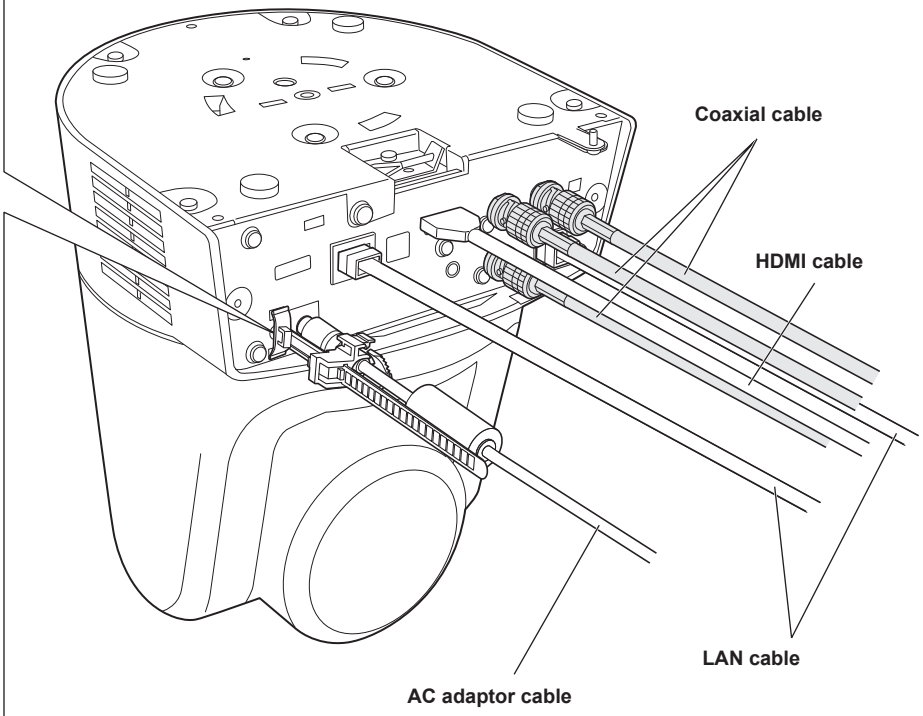

How to install and connect the unit (continued)

7. Attach the cable cover.

- Fit the two protrusions on the cable cover into the guides on either side of the camera main unit rear panel.
- Using the two screws (M3) supplied with the cable cover, secure the cable cover to the camera main unit.
- Attach the mount bracket securely with the prescribed tool using the clamping torque below.
- Be absolutely sure to verify that none of the screws are loose.

Screw diameter	Clamping torque
M3	0.78 N · m {8 kgf · cm}

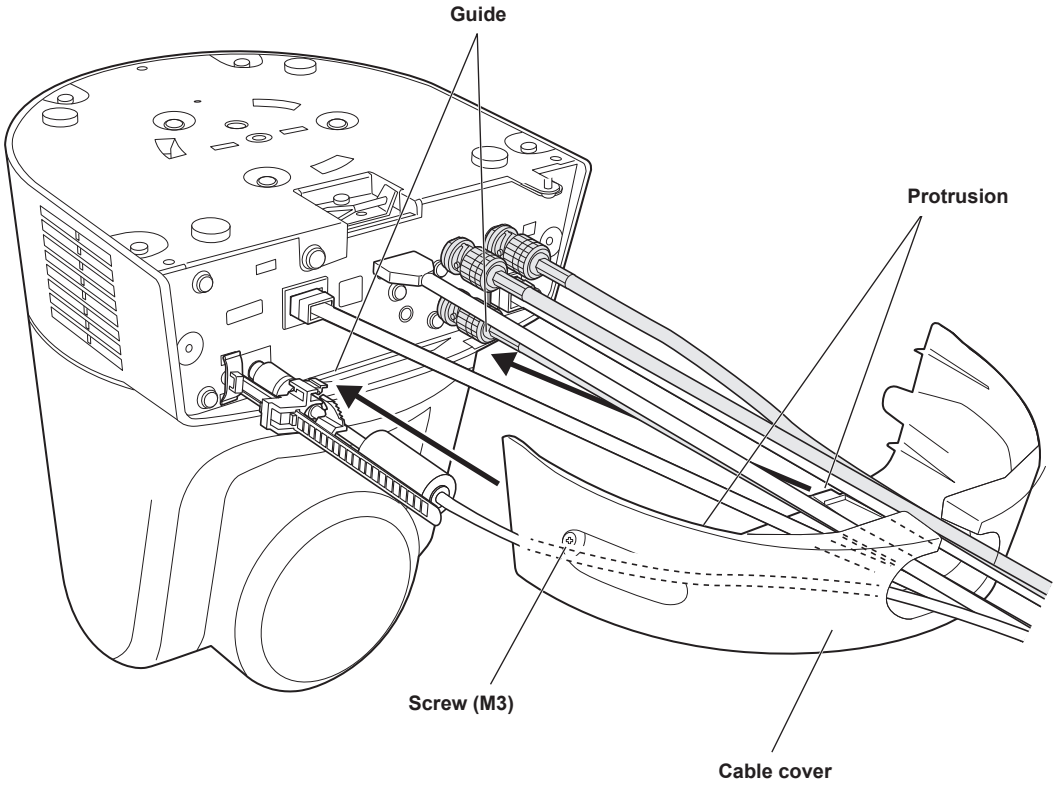

<NOTE>

- Be sure to tighten to the specified torque.
- Check that the unit has been mounted securely with no wobbling.

● Make the setting for Desktop/Hanging for reflecting the installed status on this unit.

When performing operations from a wireless remote control

① Press one of the <CAM1> to <CAM4> buttons on the wireless remote control to select the unit.
② Press and hold the <MENU> button for approximately 2 seconds to display the Top Menu.
③ Press the <▲> or <▼> button to select [Pan/Tilt].
④ Select [Install Position] and select [Desktop] or [Hanging] according to the installation conditions.

How to install and connect the unit (continued)

When using the WV-Q105A (optional accessory)

It is recommended that you provide an inspection opening or other such space for access purposes in the area near where the equipment is installed in order to facilitate installation and the wiring connections work.
Before mounting the mount bracket, check that the installation location is strong enough to withstand the total mass (approx. 2.7 kg (5.94 lb)) which will be exerted once the camera is mounted.
Use the mount bracket where the space between the ceiling panel and the concrete ceiling is at least 100 mm (3-15/16 inches) high.
The bracket can be mounted where the thickness of the ceiling panel ranges from 5 mm (3/16 inches) to 40 mm (1-9/16 inches).
The drop-prevention wire (supplied with the WV-Q105A) must be used when mounting the direct ceiling mount bracket.

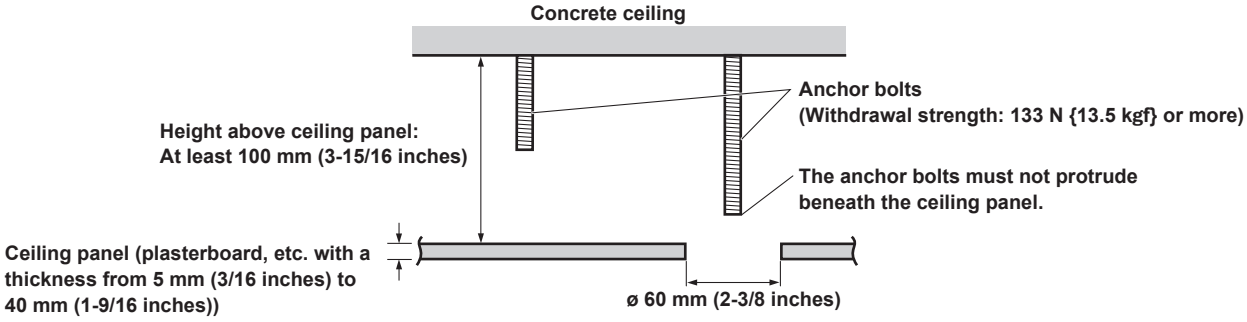

1. Refer to the Operating Instructions of the WV-Q105A direct ceiling mount bracket, and attach the WV-Q105A as well as the drop-prevention wire angle and drop-prevention wire supplied with the WV-Q105A to the anchor bolts.

> **Mounting the anchor bolts and direct ceiling mount bracket (∗)**
> This job is facilitated if the direct ceiling mount bracket is loosely secured to the ceiling panel in one place, and the direct ceiling mount bracket and anchor bolts are vertically aligned before the nuts are tightened up.

2. First, remove the screws which were loosely fastened in step 1, and then align the camera mount bracket of the AW-UE100 with the screw holes in the WV-Q105A direct ceiling mount bracket and mount it in place.

- Use the mounting screws (the M4-L60 Phillips head screws with adhesive) supplied with the WV-Q105A as the mounting screws.
- Fasten the AC adaptor securely to the bottom or other surface of the reinforcing member made of channel steel where dust and other foreign matter will not accumulate.
- Do not place the AC adaptor directly onto the ceiling panel or other such surface.

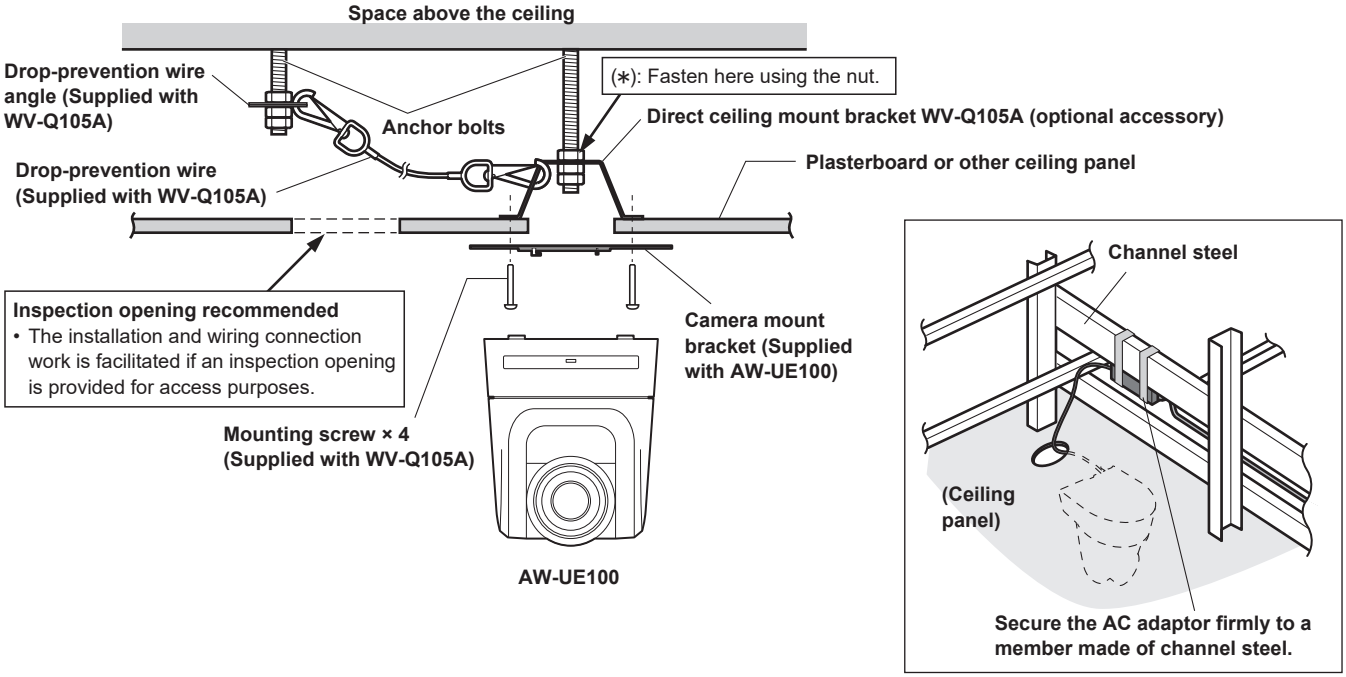

3. Install the AW-UE100 camera by following the procedure starting with step 3 on page 9.

Removing the camera

1. Turn off the circuit breaker and power.

2. Disconnect the cables.
Disconnect the LAN cable, and HDMI cable, etc.

3. Remove the main unit mounting screw used to secure the unit and mount bracket.

4. Push the unit (①). Turn it approximately 15 degrees away from the installed position (②), and remove it (③).

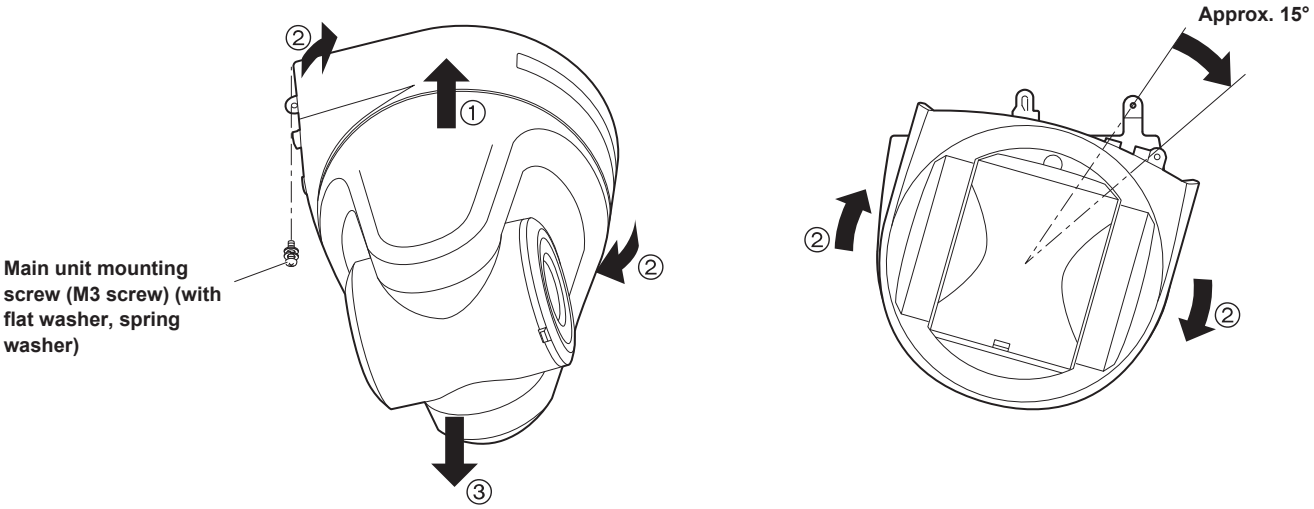

<NOTE>
- Do not do this work while holding the camera head since doing so may result in malfunctioning of the unit.

5. Disengage the drop-prevention wire from the mount bracket.

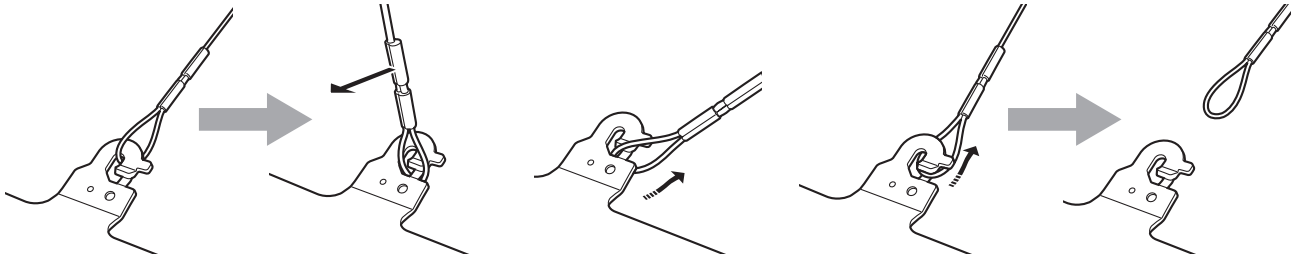

①Pull the dropprevention wire in the direction shown by the arrow above.

②Twist the wire, and remove the wire loop through the opening in the hook.

③Pull the wire in the direction shown by the arrow above, and simply pull it out.

Stand-alone installation (when the mount bracket is going to be used)

The same steps are followed as for the kind of installation where the unit is suspended from an overhead surface (→ pages 8 to 11).

1. Check the mounting space.

<NOTE>

- As with installing the unit suspended from an overhead surface, carefully check the space where the unit will be mounted, and then decide if it is appropriate to install the unit in that space.

2. Mount the mount bracket onto the installation surface.

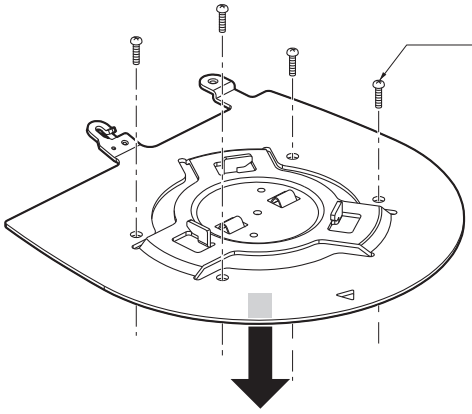

3. Attach the drop-prevention wire.

4. Mount the unit.

- Align the position of the hole for checking the positioning with the status display lamp.
- Align the holes on the camera main unit used to insert the bottom panel with the protrusions on the mount bracket used for inserting the camera, push the bracket and camera firmly together, and rotate the main unit by about 15 degrees in the direction of the arrow.
- Secure the mount bracket to the unit using the main unit mounting screw (M3) as supplied.

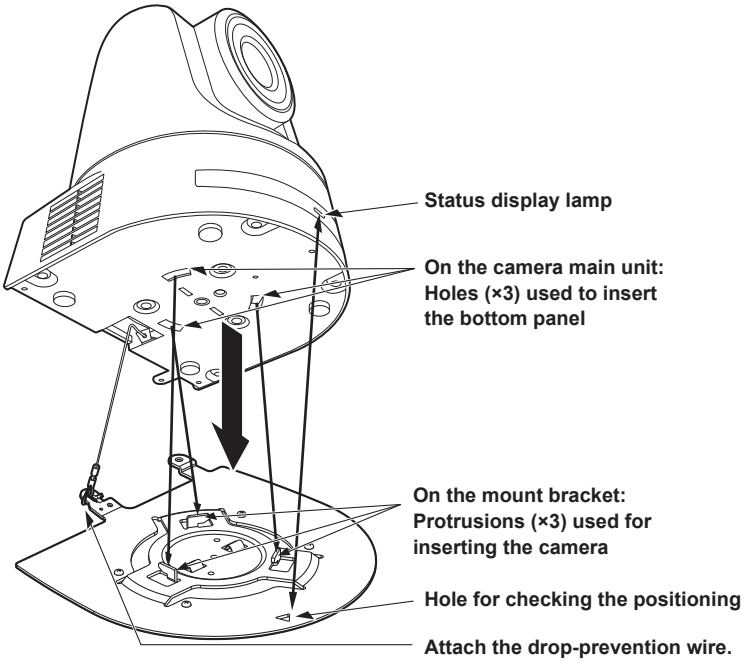

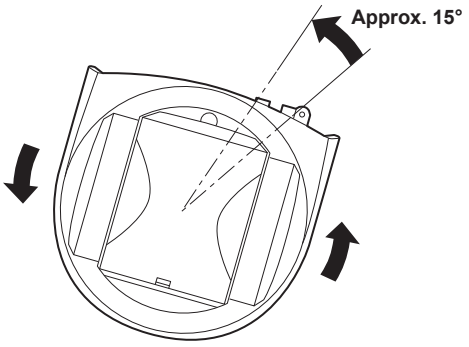

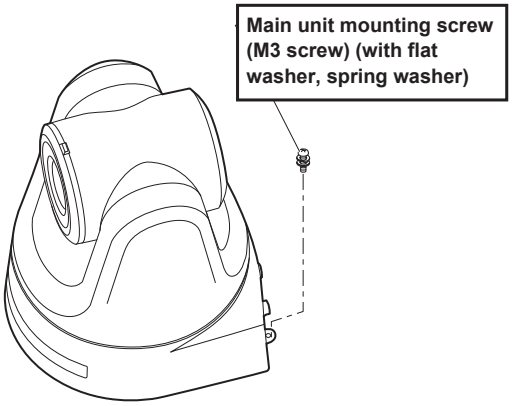

Stand-alone installation (when the mount bracket is going to be used) (continued)

5. Check the mounting.

6. Connect the rear panel connectors.

<NOTE>

- Do not connect PoE cable to the RS-422 port.
- For details on recommended products, refer to the catalog or consult your local dealer.
- Always disconnect the power supply before connecting or disconnecting cables.
  Connecting or disconnecting cables while the power is turned on may result in malfunctions.

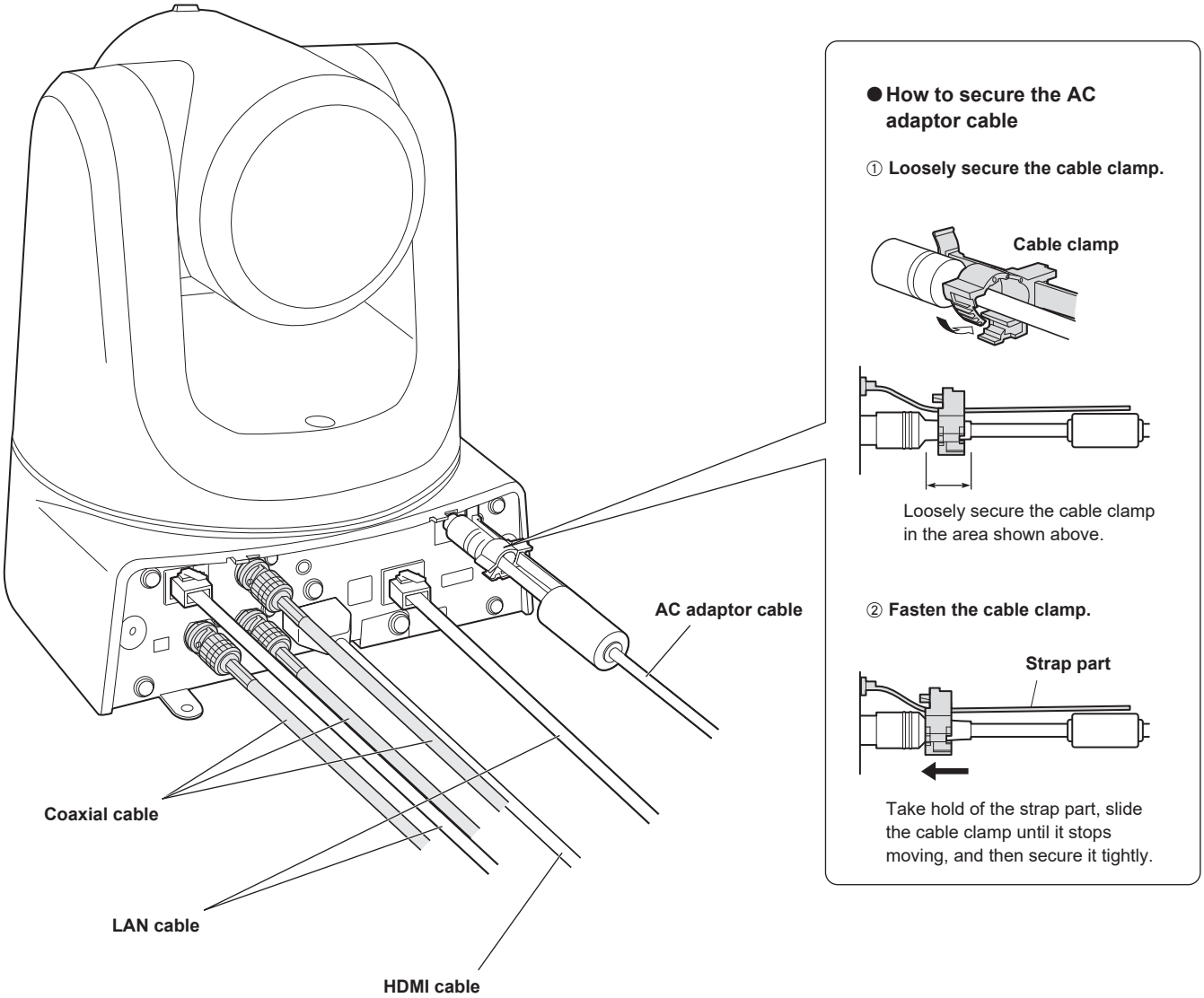

Stand-alone installation (when the mount bracket is going to be used) (continued)

7. Attach the cable cover.

- Fit the two protrusions on the cable cover into the guides on either side of the camera main unit rear panel.
- Using the two screws (M3) supplied with the cable cover, secure the cable cover to the camera main unit.
- Attach the mount bracket securely with the prescribed tool using the clamping torque below.
- Be absolutely sure to verify that none of the screws are loose.

Screw diameter	Clamping torque
M3	0.78 N · m {8 kgf · cm}

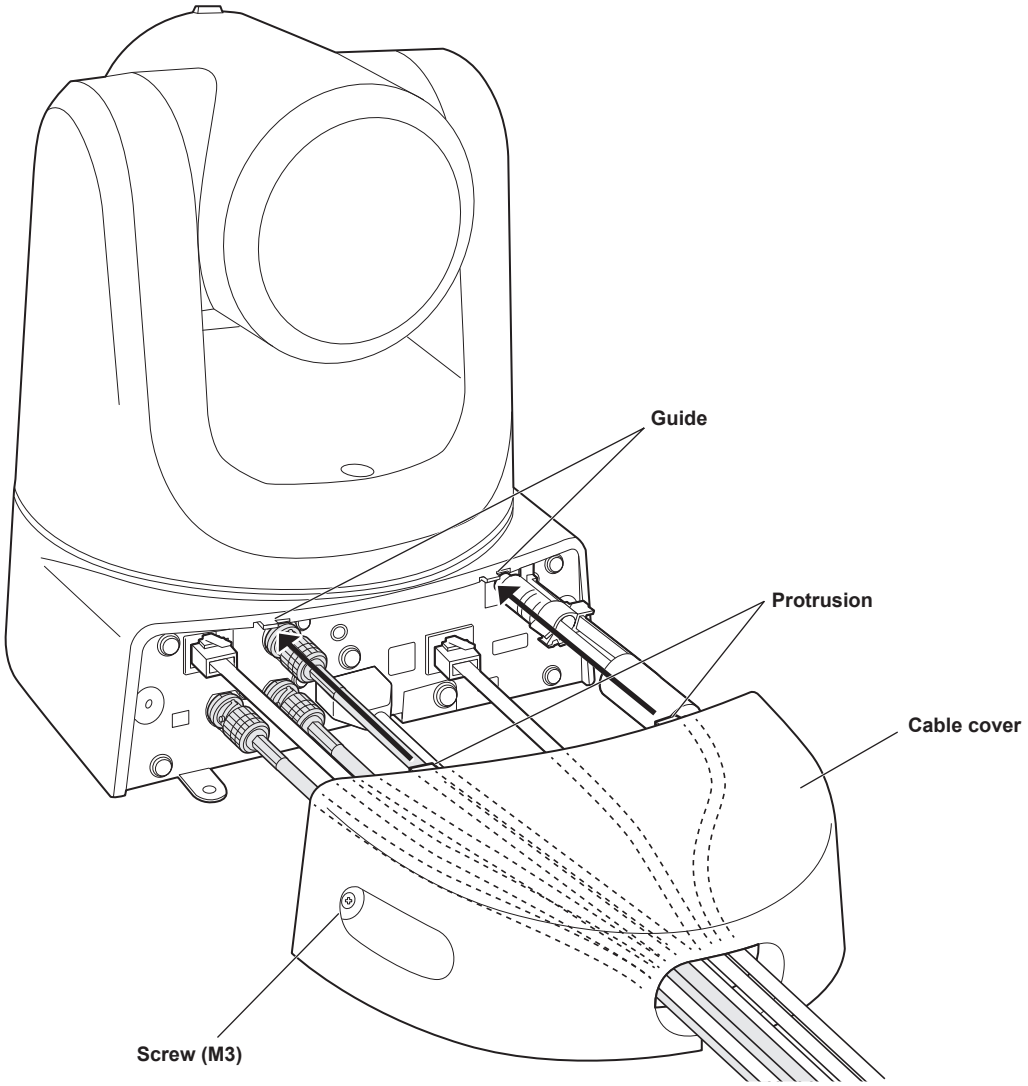

<NOTE>

- Be sure to tighten to the specified torque.
- Check that the unit has been mounted securely with no tilting.

Stand-alone installation (when the mount bracket is not going to be used)

When installing the unit on a desktop

Place the unit flat on the surface.

<NOTE>

- Install the unit in a stable location which will not be susceptible to shaking. If the unit is installed in a location which is susceptible to shaking, this will cause the unit's images to shake in turn.
- Take care not to allow the unit to fall or otherwise be damaged during installation.
- When carrying the unit, do not hold it by its head.
- Do not take hold of the camera head or rotate it. Doing so may cause malfunctioning.
- Take care not to pull the connected cables. Doing so may cause the unit to fall and/or it may result in injury.

Ensure that the unit will not fall off.

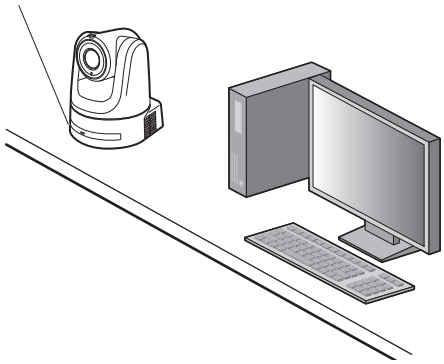

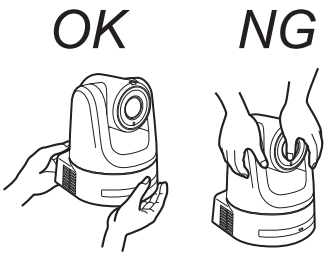

When mounting the unit on a tripod

Attach the tripod to the threaded holes for mounting the camera on the camera's bottom panel.
Place the tripod on a completely flat and level surface.
Tighten the screws by hand to mount the tripod securely.
Use screw for mounting the tripod that satisfy the following standard.

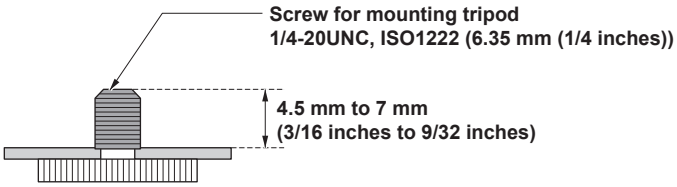

<NOTE>

- Do not install the unit where people will be passing back and forth.
- When using the unit mounted on a tripod, do not put the tripod high above the floor level.
- Mount the unit securely so there is no looseness. Looseness may cause the unit to fall off and/or result in injuries.
- When the unit is going to be used for a prolonged period of time, take steps to ensure that the unit will not topple or fall over and that it will not fall off or fall down. After using the unit, restore the installation location to its original state without delay.

Connections

Connecting an NDI|HX compatible switcher

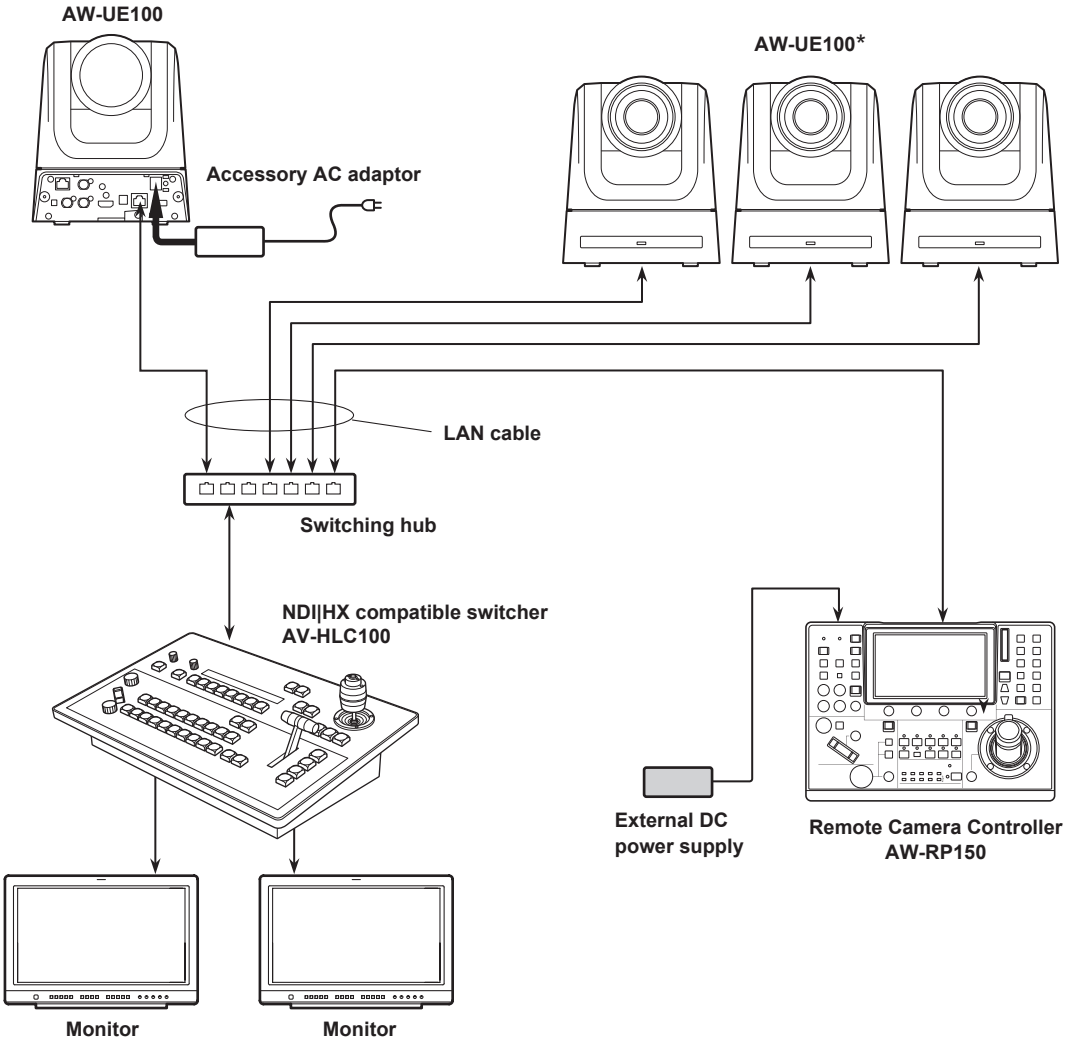

*: The AC adaptor provided with the unit is not shown in the above figure.

Connections (continued)

Connections with a controller (AW-RP150)

■ Example of connection for the function for cropping 4K images to HD images

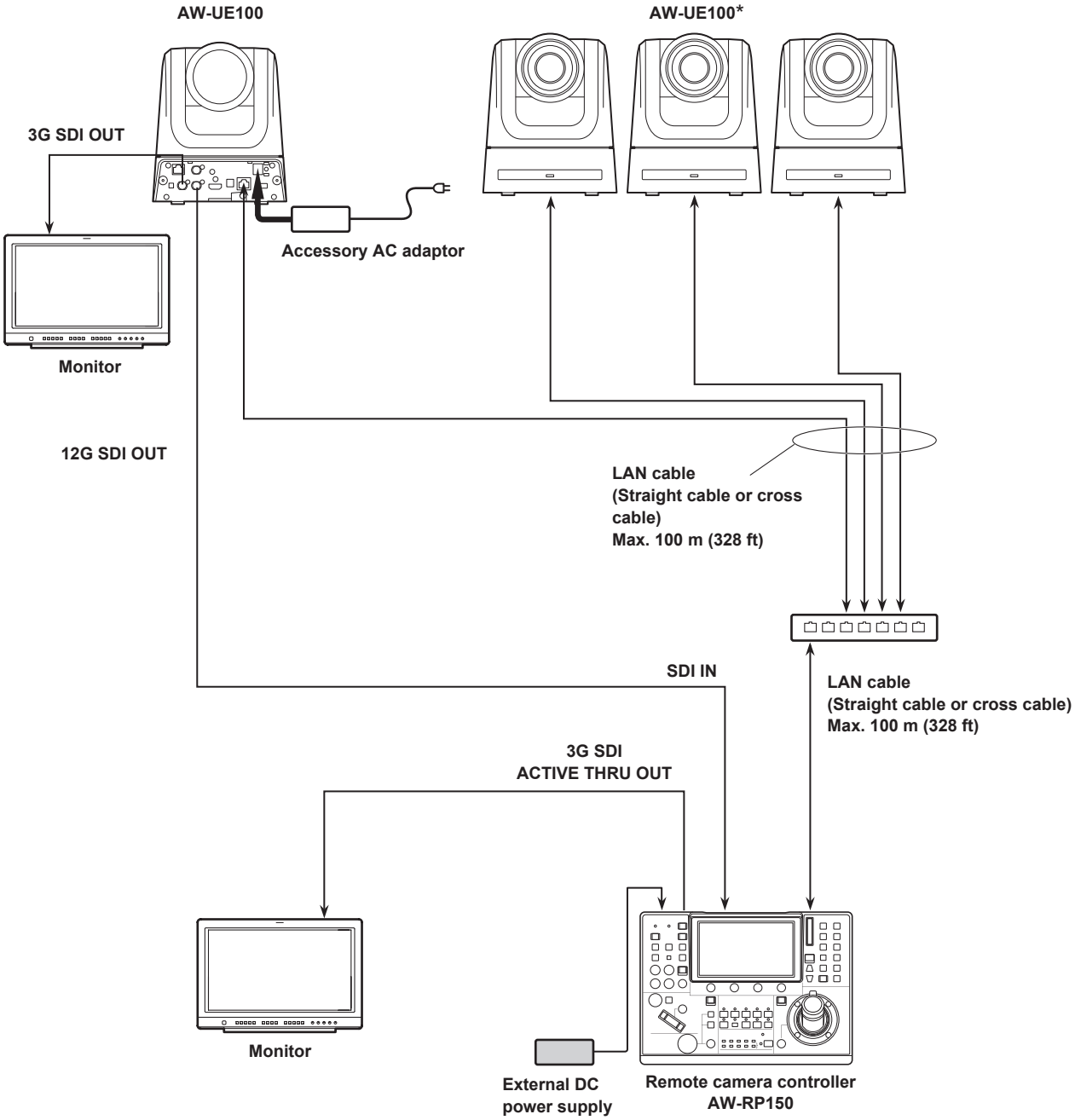

*: The AC adaptor provided with the unit is not shown in the above figure.

- Use a category 5e cable for the LAN cable.
- When using 12G SDI OUT and 3G SDI OUT for the cropping and output, use HDMI output for 4K video.

Connections (continued)

System example 1 (Serial control)

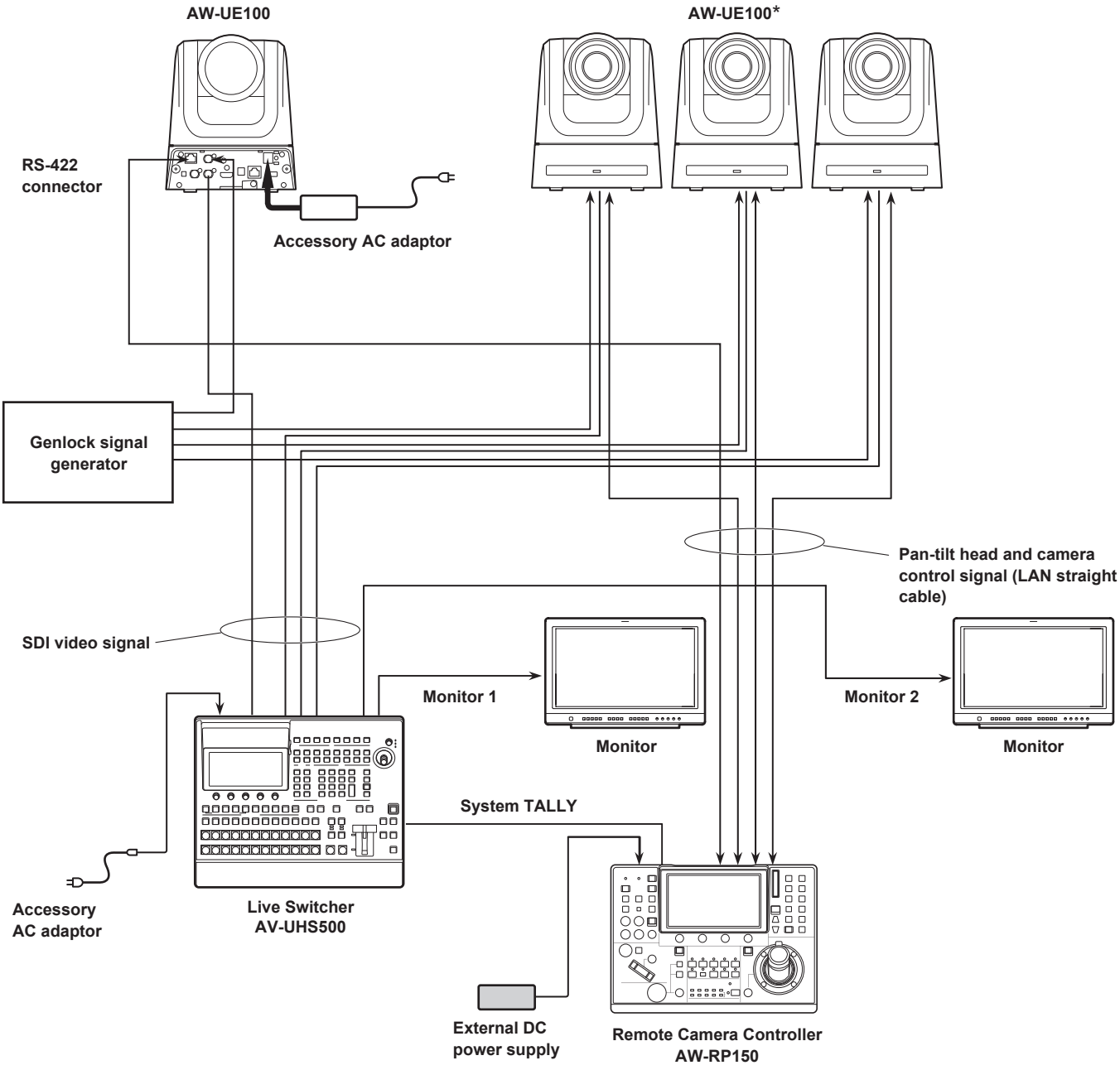

*: The AC adaptor provided with the unit is not shown in the above figure.

Connections (continued)

System example 2 (IP control)

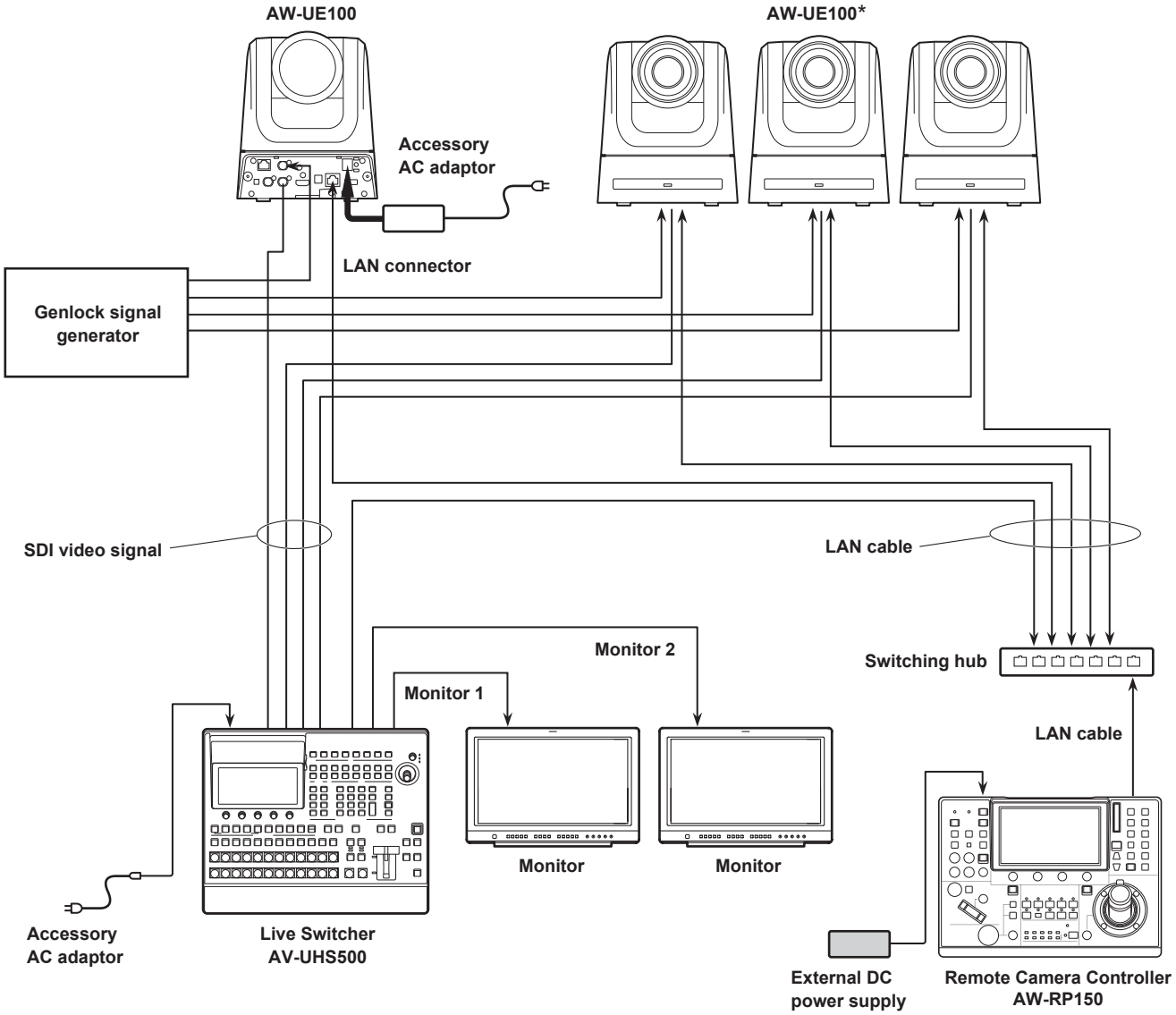

*: The AC adaptor provided with the unit is not shown in the above figure.

Connections (continued)

System example 3 (IP image transmission, PoE++)

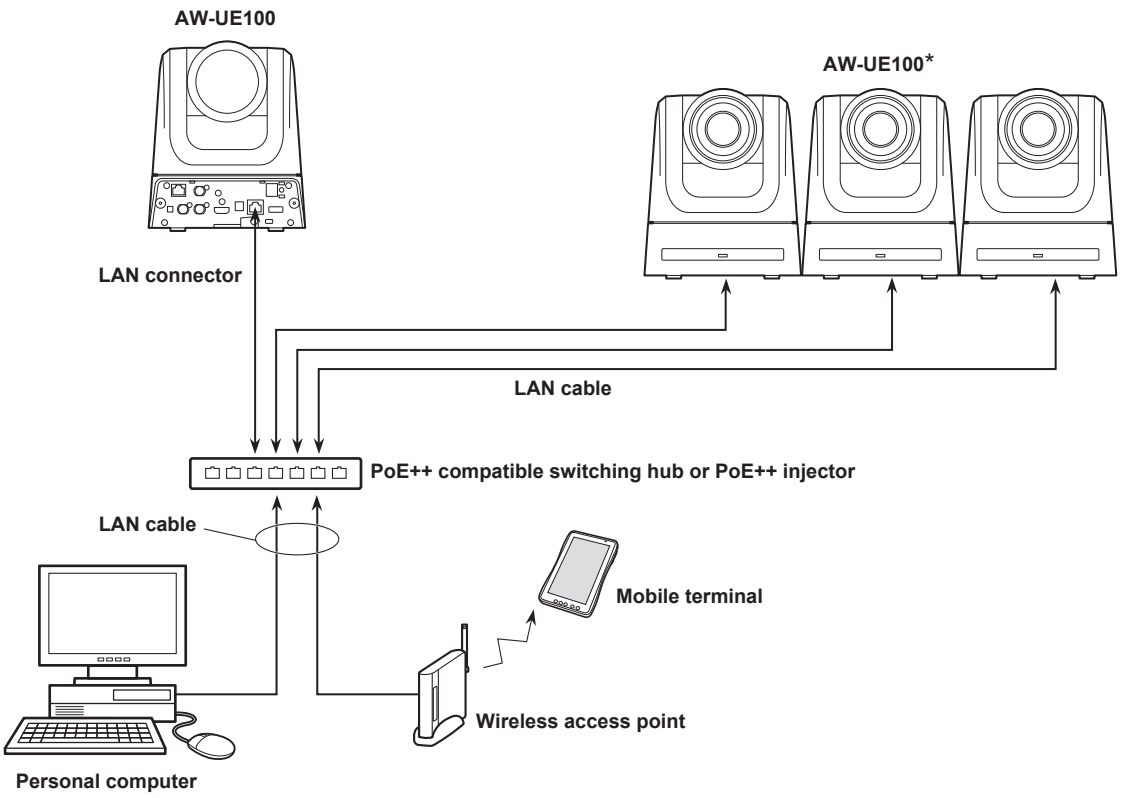

*: The AC adaptor provided with the unit is not shown in the above figure.

System example 4 (NDI)

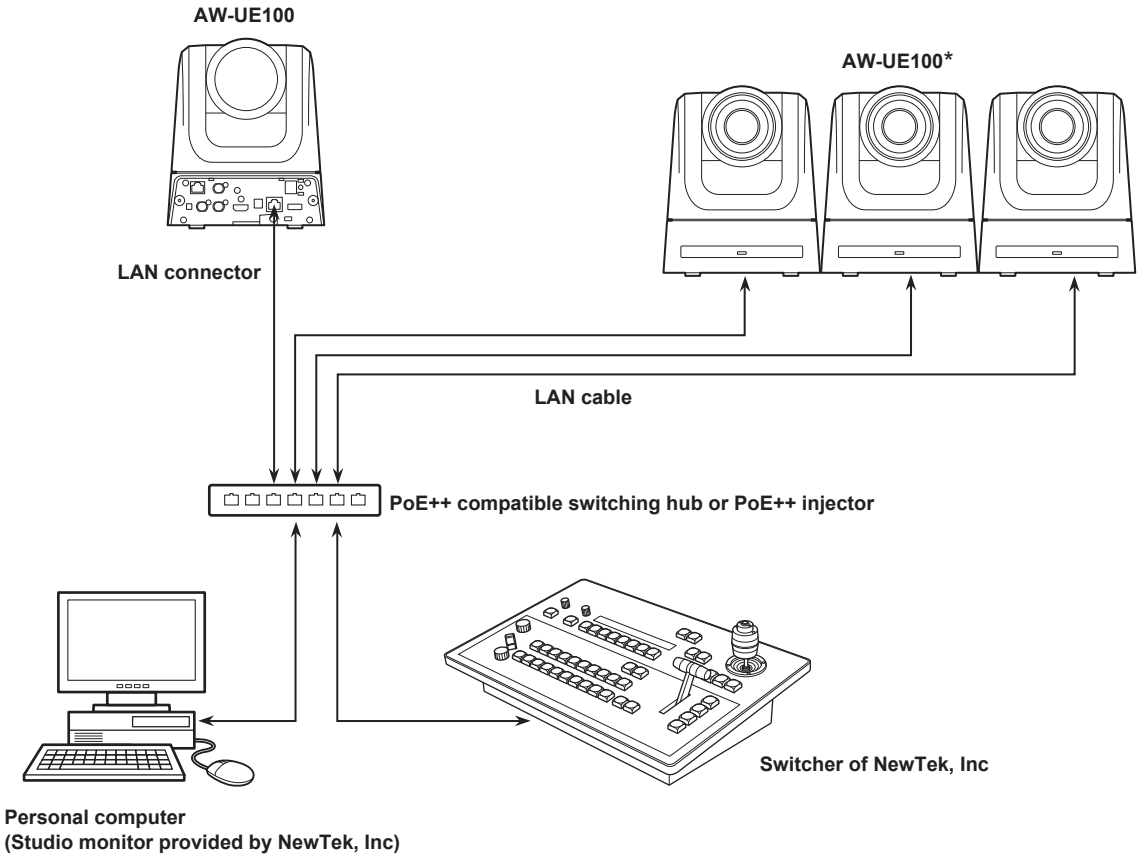

*: The AC adaptor provided with the unit is not shown in the above figure.

Appearance

Unit: mm (inch)

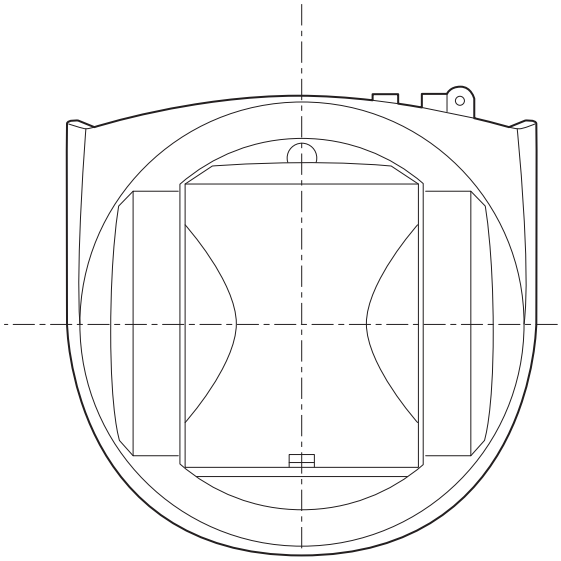

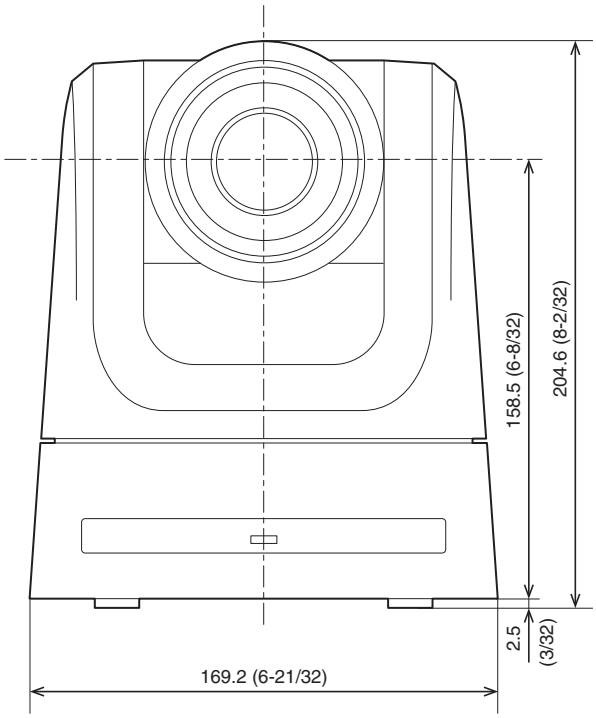

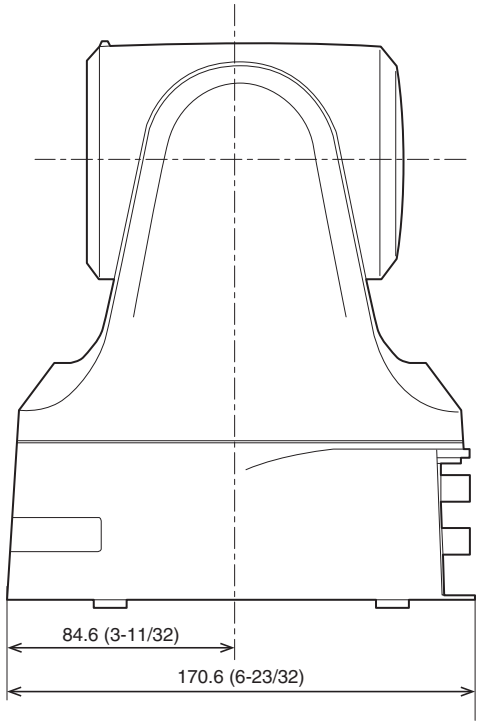

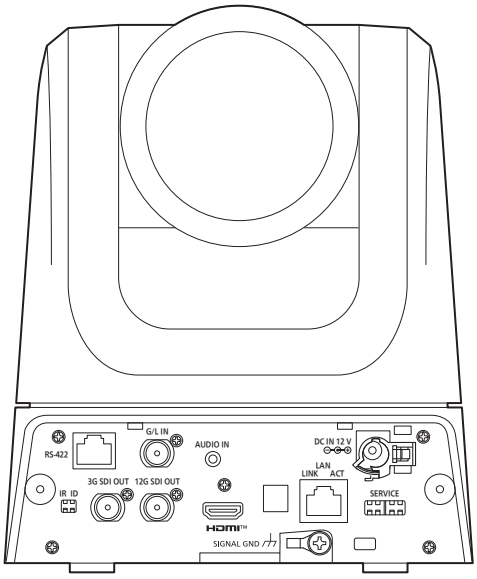

Rear panel view

Read this first!

WARNING:
- To reduce the risk of fire or electric shock, do not expose this equipment to rain or moisture.
- To reduce the risk of fire or electric shock, keep this equipment away from all liquids. Use and store only in locations which are not exposed to the risk of dripping or splashing liquids, and do not place any liquid containers on top of the equipment.

WARNING:
Always keep the main unit mounting screw, bracket mounting screws and drop-prevention wire mounting screw out of the reach of infants and small children.

WARNING:
Installation should only be performed by qualified installation personnel.
Improper installation may result in the entire apparatus falling down and causing injury.

CAUTION:
Do not remove panel covers by unscrewing.
To reduce the risk of electric shock, do not remove the covers.
No user serviceable parts inside.
Refer servicing to qualified service personnel.

CAUTION:
This apparatus can be operated at a voltage in the range of 100 – 240 V AC.
Voltages other than 120 V are not intended for U.S.A. and Canada.
Operation at a voltage other than 120 V AC may require the use of a different AC plug. Please contact either a local or foreign Panasonic authorized service center for assistance in selecting an alternate AC plug.

CAUTION:
The mains plug of the power supply cord shall remain readily operable.
The AC receptacle (mains socket outlet) shall be installed near the equipment and shall be easily accessible. To completely disconnect this equipment from the AC mains, disconnect the power cord plug from the AC receptacle.

CAUTION:
In order to maintain adequate ventilation, do not install or place this unit in a bookcase, built-in cabinet or any other confined space. To prevent risk of electric shock or fire hazard due to overheating, ensure that curtains and any other materials do not obstruct the ventilation.

CAUTION:
To reduce the risk of fire or electric shock and annoying interference, use the recommended accessories only.

CAUTION:
Check the installation at least once a year.
An improper installation could cause the unit to fall off resulting in personal injury.

▭ indicates safety information.

FCC NOTICE (USA)

Supplier's Declaration of Conformity
Model Number: AW-UE100WP/AW-UE100KP
Trade Name: Panasonic
Responsible Party: Panasonic Corporation of North America
Two Riverfront Plaza, Newark, NJ 07102
Support contact: 1-800-524-1448

This device complies with part 15 of the FCC Rules.
Operation is subject to the following two conditions:
(1) This device may not cause harmful interference, and (2) this device must accept any interference received, including interference that may cause undesired operation.

FCC Note:
This equipment has been tested and found to comply with the limits for a class A digital device, pursuant to Part 15 of the FCC Rules.
These limits are designed to provide reasonable protection against harmful interference when the equipment is operated in a commercial environment. This equipment generates, uses, and can radiate radio frequency energy, and if not installed and used in accordance with the instruction manual, may cause harmful interference to radio communications. Operation of this equipment in a residential area is likely to cause harmful interference in which case the user will be required to correct the interference at his own expense.

Warning:
To assure continued FCC emission limit compliance, the user must use only shielded interface cables when connecting to external units. Also, any unauthorized changes or modifications to this equipment could void the user's authority to operate it.

▭ indicates safety information.

The symbols on this product (including the accessories) represent the following:

∿	AC
⎓	DC

Lea esto primero!

ADVERTENCIA:
- Para reducir el riesgo de producir un incendio o recibir una descarga eléctrica, no exponga este equipo a la lluvia ni a la humedad.
- Para reducir el riesgo de incendio o sacudida eléctrica, mantenga este equipo alejado de todos los líquidos. Utilícelo y guárdelo solamente en lugares donde no corra el riesgo de que le caigan gotas o le salpiquen líquidos, y no coloque ningún recipiente de líquidos encima del equipo.

ADVERTENCIA:
Mantenga siempre el tornillo de montaje de la unidad, los tornillos de montaje de la ménsula y el tornillo de montaje del cable para evitar caídas fuera del alcance de los niños y bebés.

ADVERTENCIA:
La instalación solamente debe llevarla a cabo personal cualificado.
Una instalación incorrecta podría provocar la caída del dispositivo y causar lesiones.

PRECAUCIÓN:
No quite la cubierta desatornillándola.
No quite la tapa para evitar el riesgo de sacudidas eléctricas.
Las piezas del interior no requieren mantenimiento por parte del usuario.
Solicite las reparaciones al personal de servicio calificado.

PRECAUCIÓN:
Este aparato puede funcionar con una tensión de entre 100 – 240 V CA.
Las tensiones diferentes de 120 V no son adecuadas para los EE.UU. y Canadá.
El funcionamiento con una tensión diferente de 120 V CA puede requerir la utilización de una clavija de CA diferente.
Póngase en contacto con un centro de servicio autorizado por Panasonic, bien sea local o del extranjero, para que le ayude en la selección de una clavija de CA alternativa.

PRECAUCIÓN:
El enchufe del cable de la alimentación deberá poder conectarse y desconectarse fácilmente.
La toma de ca (toma de la red) deberá estar cerca del equipo y a ella podrá accederse fácilmente.
Para desconectar completamente el equipo de la red, desconecte el cable de alimentación de la toma de red.

PRECAUCIÓN:
Para mantener unas buenas condiciones de ventilación, no instale ni ponga este aparato en una librería, mueble empotrado u otro espacio reducido. Para evitar el riesgo de que se produzcan sacudidas eléctricas o peligros de incendio debidos al recalentamiento, asegúrese de que las cortinas y otros materiales no obstruyan la ventilación.

PRECAUCIÓN:
Para reducir el riesgo de incendios, sacudidas eléctricas e interferencias molestas, utilice solamente los accesorios recomendados.

PRECAUCIÓN:
Compruebe la instalación al menos una vez al año.
Una instalación incorrecta podría provocar la caída de la unidad, lo cual podría causar lesiones al usuario.

▭ indica información de seguridad.

Los símbolos en este producto (incluidos los accesorios) representan lo siguiente.

∼	CA
⎓	CC

Read this first!

Note on grounding

- Ground the unit via the <SIGNAL GND> ground connector.

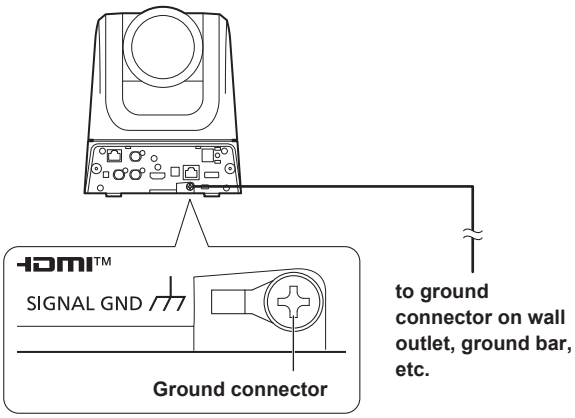

Before use

Overview

- This product is an all-in-one pan-tilt head remote camera that supports 4K/12G-SDI and is also compatible with 4K/60p format.
- Equipped with an optical 24x zoom lens and 4K-compatible 1/2.5 type MOS sensor, it is possible to shoot high-quality images with a high degree of realism with the horizontal resolution of 1500 lines.
  With its built-in image-shake correction and night mode functions, the unit can shoot in a wide range of environments.
- This product is compatible with High Bandwidth NDI (hereafter, NDI) and NDI|HX technology of NewTek, Inc.
  The problem of IP transmission delay and image degradation of NDI|HX will be resolved with High Bandwidth NDI.
- The problem of operating noise in pan/tilt operations has been significantly reduced by adopting the Direct Drive system.
- The unit supports transmission of video to NewTek High Bandwidth NDI and NDI|HX compatible software applications and hardware devices over a network.
- When a controller is connected, camera operations can be performed smoothly via IP control or serial control.
- The unit features a night mode that exposes subjects to infrared rays, making it possible to shoot even under low-light conditions.
- When the unit is connected to a personal computer via an IP network, it can be operated via a web browser.
- With a variety of 4K interfaces, there are individual outputs for HD and SDI, so the unit can be used flexibly in a wide range of situations as a 4K-compatible remote camera.
- Connection with a Panasonic camera controller is also possible via Panasonic's proprietary serial communication format.
- The unit is available in white (AW-UE100WP) or black (AW-UE100KP) to suit your intended application and environment.

Computer requirements

CPU	7th Generation Intel® Core™ (Kaby Lake or later) recommended
Memory	**For Windows:** 4 GB or more **For Mac:** 4 GB or more
Network function	100BASE-T/TX or 1000BASE-T, RJ-45 connector
Image display	Resolution: 1920 × 1080 pixels or more Color generation: True Color 24-bit or more
Supported operating systems and web browsers	**For Windows:** Microsoft® Windows® 10 Windows® Internet Explorer® 11 64-bit/32-bit Microsoft Edge Google Chrome
	For Mac: macOS 10.13 Safari 13 macOS 10.14 Safari 13 macOS 10.15 Safari 13 macOS 10.15 Google Chrome
	For iPhone, iPad: iOS Safari iPadOS
	For Android: Android OS Google Chrome
Other	Adobe® Reader® (for viewing the operating instructions available on the website)

IMPORTANT
- **Failure to provide the required personal computer environment may slow down the delineation of the images on the screen, make it impossible for the web browser to work and cause other kinds of problems.**

<NOTE>
- Depending on the software version of the unit, an update may be necessary.
- For the latest information on compatible operating systems and web browsers, visit the support desk at the following website.

  https://pro-av.panasonic.net/en/

Disclaimer of warranty

IN NO EVENT SHALL Panasonic Entertainment & Communication Co., Ltd. BE LIABLE TO ANY PARTY OR ANY PERSON, EXCEPT FOR REPLACEMENT OR REASONABLE MAINTENANCE OF THE PRODUCT, FOR THE CASES, INCLUDING BUT NOT LIMITED TO BELOW:

① ANY DAMAGE AND LOSS, INCLUDING WITHOUT LIMITATION, DIRECT OR INDIRECT, SPECIAL, CONSEQUENTIAL OR EXEMPLARY, ARISING OUT OF OR RELATING TO THE PRODUCT;
② PERSONAL INJURY OR ANY DAMAGE CAUSED BY INAPPROPRIATE USE OR NEGLIGENT OPERATION OF THE USER;
③ UNAUTHORIZED DISASSEMBLE, REPAIR OR MODIFICATION OF THE PRODUCT BY THE USER;
④ INCONVENIENCE OR ANY LOSS ARISING WHEN IMAGES ARE NOT DISPLAYED, DUE TO ANY REASON OR CAUSE INCLUDING ANY FAILURE OR PROBLEM OF THE PRODUCT;
⑤ ANY PROBLEM, CONSEQUENTIAL INCONVENIENCE, OR LOSS OR DAMAGE, ARISING OUT OF THE SYSTEM COMBINED BY THE DEVICES OF THIRD PARTY;
⑥ ANY DEMANDS FOR COMPENSATION, CLAIMS, ETC. OCCASIONED BY THE INFRINGEMENT OF PRIVACY BY INDIVIDUALS OR ORGANIZATIONS WHOSE IMAGES WERE SHOT BY THE USER BECAUSE THESE IMAGES (INCLUDING THE RECORDINGS MADE) WERE MADE AVAILABLE BY THE USER BECAUSE IN THE PUBLIC DOMAIN FOR SOME REASON OR OTHER OR BECAUSE THE IMAGES ENDED UP BEING USED FOR PURPOSES OTHER THAN THE ONE DESCRIBED ABOVE;
⑦ LOSS OF REGISTERED DATA CAUSED BY ANY FAILURE.

Network security

As the unit intended to be used while connected to a network, the following security risks exist.

① Leakage or theft of information through the unit
② Unauthorized operation of the unit by persons with malicious intent
③ Interference with or stoppage of the unit by persons with malicious intent

It is your responsibility to take precautions, such as those described below, to protect yourself against the above network security risks. Panasonic does not accept any responsibility for damage of this type.

- Use the unit in a network secured by a firewall, etc.
- If the unit is connected to a network that includes personal computers, make sure that the system is not infected by computer viruses or other malicious programs (using a regularly updated antivirus program, anti-spyware program, etc.).
- Protect your network against unauthorized access by restricting users to those who log in with an authorized user name and password.
- After accessing the unit as an administrator, be sure to close all web browsers.
- Change the administrator password periodically.
- To avoid passwords that can be guessed easily by third parties, set a password of at least 8 characters in length, including at least 3 different types of characters, such as upper case, lower case, numbers, and symbols.
- Restrict access to the unit by authenticating the users, for example, to prevent setting information stored on the unit from leaking over the network.
- Do not install the unit in locations where the unit, cables, and other parts can be easily damaged or destroyed by persons with malicious intent.
- Avoid connections that use public lines.

<NOTE>

Notes on user authentication
- User authentication on the unit can performed via digest authentication or basic authentication. If basic authentication is used without the use of a dedicated authentication device, password leaks may occur.
  We recommend using digest authentication or host authentication.

Usage restrictions
- We recommend connecting the unit, controller, and any computers to the same network segment.
  Events based on settings inherent to the network devices, for example, may occur in connections that include different segments, so be sure to perform checks prior to operation.

Features

Multi-format support

- You can switch between the following formats via the camera menus or a web browser.

[4K format]
2160/59.94p, 2160/50p, 2160/29.97p*1, 2160/25p*1, 2160/24p*1, 2160/23.98p*1
[HD format]
1080/59.94p, 1080/50p, 1080/29.97p*1, 1080/29.97PsF, 1080/25p*1, 1080/25PsF, 1080/23.98p*2, 1080/24p*1, 1080/23.98p*1, 1080/23.98PsF, 1080/59.94i, 1080/50i, 720/59.94p, 720/50p

*1 Native output
*2 OVER 59.94i output (your monitor may recognize the signal as 59.94i).

1/2.5-type 4K MOS sensor and high-performance 24x zoom lens featured

- The latest 1/2.5-type 4K MOS sensor and DSP (Digital Signal Processor) are incorporated. High-quality pictures are obtained by video processing in many different kinds of ways.
- In addition to its optical 24x zoom lens, the unit comes with a 10x digital zoom to achieve high-quality images that overflow with ambiance. Zoom up to 36x is possible (up to 28x in 4K mode) while maintaining the picture quality with the use of iZoom.
- A dynamic range stretcher (DRS) function that compensates for overexposure and loss of dark detail and a digital noise reduction (DNR) function for minimizing image lag even in dark locations and shooting scenes clearly are incorporated to reproduce clean and clear images in a wide range of applications.

Easy operation of unit enabled by its integration with a high-performance pan-tilt head unit

- Operations at the high speed of 180°/s
- Wide rotational angles with a panning range of ±175° and a tilting range from –30° to 210°
- Quiet operation with noise levels of NC35 or less
- Storage of up to 100 positions in the preset memory
  (The number of preset memories that can be used varies from one controller to another.)

Built-in night mode

- The unit supports infrared shooting.
  By exposing subjects to infrared rays, shooting under ordinarily difficult low-light conditions is possible.
  (Image output will be in black and white.)
- The iris will be fixed at open.

IP image output functions

- The unit is equipped with image compression and IP transmission LSI capabilities. Output in 4K quality at up to 60 fps.
- Operation with IP control allows for a wide range of applications, such as controlling the camera from remote locations.

High degree of compatibility with Panasonic's currently available controllers, enabling a flexible system to be put together

- A maximum of five units can be operated by serial control from one of Panasonic's currently available controllers (AW-RP150, AW-RP60).
  The unit can also be used together with the cameras and pan-tilt head unit systems currently available from Panasonic Entertainment & Communication Co., Ltd. so that an existing system can be used to advantage to put together a system that is even more flexible.

<NOTE>
- It may be necessary to upgrade the version of the controllers in order to support the unit. For details on upgrading, visit the support page on the following website.
  https://pro-av.panasonic.net/en/
  The maximum distances between the units and controller is 1000 meters (3280 ft). (when serial control is exercised)
  Use of an external device or some other means must be provided separately in order to extend the video signal connections.

Easy construction of systems thanks to integrated design used for pan-tilt head, camera and lens

- By integrating the camera, lens and pan-tilt head into a single unit, it is now easier to construct systems.

Use of easy-to-operate wireless remote control (optional accessory) is possible

- A wireless remote control capable of operating up to four units can be used.
  It can easily be used to set the various functions or switch between them while viewing the menu screens.

Flexible camera layout enabled by simple connection and installation

- This unit features excellent connectivity and installability thanks to the IP control; a lightweight main unit, and the turn-lock mechanism, which enables the user to install it on his or her own (only when used indoors).

<NOTE>
- Bear in mind that this unit is designed to be used indoors only: It cannot be used outdoors.

While including a 4K-compatible or different kinds of interface, the unit still has the same installation footprint as previous models

- The unit maintains the compact installation footprint of previous models.

Easy connections and settings courtesy of IP control

- Up to two hundred units can be operated by IP connection from a Panasonic controller (AW-RP150, AW-RP60).
  (The maximum length of the LAN cables is 100 meters (328 ft).)
- Network connection with AW-RP150 or AW-RP60 requires setup of an initial account. (→ page 50)
  When an initial account is not set up, AW-RP150 or AW-RP60 can detect but cannot control this unit.

PoE++ *3 eliminates need for camera power configurations

- Configurations for camera's power supply are not necessary when the unit is connected to a network device that supports the PoE++ standard (IEEE 802.3bt compliant)*4.
  Software authentication (LLDP) is also supported, but it may be necessary to make settings on the network device (IEEE P802.3bt compliant)*4.

<NOTE>
- If the AC adaptor and a PoE++ power supply are connected simultaneously, the AC adaptor will have priority. If the AC adaptor is disconnected while both power supplies are connected, the unit will restart automatically, and the image will be interrupted.
- Use a Category 5e cable or higher when using a PoE++ power supply. The maximum length of the cable between the power supply unit and the unit is 100 meters (328 ft). Using a cable that is lower than Category 5e may result in reduced power supply capabilities.

*3 Power over Ethernet Plus Plus. Referred to as "PoE++" in this manual.
*4 For details on PoE++ power supply devices for which operation has been verified, consult your local dealer.

Accessories

Check that the following accessories are present and accounted for.
- After removing the product from its container, dispose of the power cable cap (if supplied) and packing materials in an appropriate manner.

Mount bracket for installation surface (Hanging/Desktop) (1) 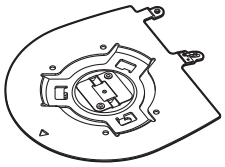	**Main unit mounting screw (with flat washer, spring washer) M3×6 mm (1/4 inches) (1)**	**Drop-prevention wire (1) Drop-prevention wire mounting screw (1) (comes attached to the unit)** 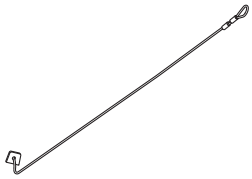
Bracket mounting screws (bind-head) M4×10 mm (13/32 inches) (4) 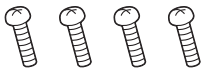	**Cable cover (1)** 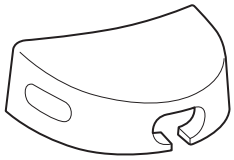	
AC adaptor (1) 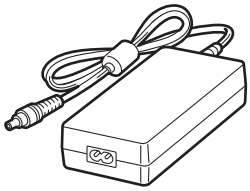	**Power cable (1)** 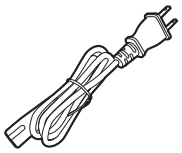	

Optional accessories

- **Wireless remote control AW-RM50G (Size “AA” dry battery x 2, obtained separately)**
- **Direct ceiling mount bracket WV-Q105A**

<NOTE>
- For details on optional accessories, refer to the catalog or consult your local dealer.

Operating precautions

Do not use the unit in oily-smoky or dusty places.

Performance may be adversely affected if small particles or other foreign objects get inside the product.
Take extra care in environments where a special effect such as theatrical smoke is used.

Do not allow foreign matter to make contact with the rotating parts.

Failure to obey may cause the unit to malfunction.

Maintenance

Turn off the unit's power before proceeding with maintenance. Failure to obey may result in injuries.
Wipe the surfaces using a soft dry cloth. Avoid all contact with benzine, paint thinners and other volatile substances, and avoid using these substances. Otherwise, the casing may become discolored.

Hold the bottom surface with both hands for picking up this unit.

If you hold the lens part or the sides, it will put a load strain on the motor and cause a malfunction.

Do not turn the camera head by hand.

Turning the camera head by hand may cause the unit to malfunction.

About the lens/pan-tilt head

If the lens, pan-tilt head, and other parts are not operated for a long period of time, the viscosity of the grease applied inside them may increase and operation may become no longer possible. Move the lens and pan/tilt head regularly.

Shoot under the proper lighting conditions.

To produce pictures with eye-pleasing colors, shoot under the proper lighting conditions.
The pictures may not appear with their proper colors when shooting under fluorescent lights. Select the proper lighting as required.

To ensure a stable performance in the long term

Using the unit for prolonged periods in locations where the temperature and humidity levels are high will cause its parts to deteriorate, resulting in a reduction of its service life.
(Recommended temperature: Max. 35 °C (95 °F))
Ensure that a cooling unit or heating unit will not blow any air directly toward the installation location.

Do not point the camera at strong lights.

When parts of the MOS sensor are exposed to spotlights or other strong lights, blooming (a phenomenon where the edges of strong lights become blurred) may occur.

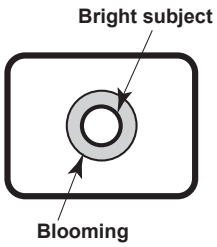

What happens with high-brightness subjects

Flare may occur if an extremely bright light source is pointed at the lens. In a case like this, change the angle or take some other remedial action.

When using the automatic functions

- In the [Scene] such as the camera menu, the initial settings on some items has been set to auto, making it impossible for these items to be operated manually. To operate them manually, switch from the auto settings to the manual settings as required.
- When using the ATW (auto tracking white adjustment) function under fluorescent lights, the white balance may vary.
- In some situations, it may be hard to focus at the auto setting. In cases like this, select the manual setting, and focus manually.

Zooming and focusing

When the focus is set manually, out-of-focusing may occur during zooming.
After zooming, if necessary, either adjust the focus or set the focus to auto.
When using the focus at the manual setting, proceed with zooming after setting the focus position at the Tele end where the focusing accuracy is higher. (However, if the distance from the unit to the subject is less than 1.2 meters (3.9 ft), the subject may shift out of focus at the Wide end.)
If zooming is performed to the Tele end after having adjusted the focus at the Wide end, out-of-focusing may occur.

Operation of the lens when the power is turned on

When the unit's power is turned on, the zoom, focus and iris are adjusted automatically.

The unit comes with the safe mode.

The safe mode is function designed to protect the unit from damage. For details, refer to the Operating Instructions (PDF) → "Safe mode".

Concerning the HDMI interface standard

This unit has been certified as HDMI-compatible, but on rare occasions images may not be displayed depending on the HDMI device which has been connected to the unit.

Color bars

Color bars are used to adjust the color phase, and the widths and positions of these bars may differ from other models.

H.264/H.265 patent pool licensing

This product is licensed based on the AVC Patent Portfolio License, and the license does not extend beyond uses by users, who engage in the acts described below, for their own personal and non-profit applications.

(i) Recording of image information in compliance with the AVC standard (hereafter, "AVC videos")
(ii) Playing of AVC videos recorded by consumers engaging in personal activities or AVC videos acquired from licensed providers

For details, visit MPEG LA, LLC website (http://www.mpegla.com).

Concerning PoE++ power supply

The unit complies with the IEEE 802.3bt.
Use a compatible Ethernet hub and PoE++ injector to use a PoE++ power supply.
Software authentication (LLDP) complies with IEEE P802.3bt, but it may be necessary to make settings on the network device.
For details on Ethernet hubs and PoE++ injectors for which operations have been verified, consult your local dealer.

Operating precautions (continued)

Turn off the power before connecting or disconnecting the cables.

This unit is not equipped with a power switch.
Disconnect the AC adaptor power plug or turn off the PoE++ power supply device before connecting or disconnecting cables.

When the unit is not in use

Turn off the unit's power when it is not in use.
When the unit is no longer going to be used, do not leave it lying around, but be absolutely sure to dispose of it properly.

Do not touch the optical system parts.

The optical system parts are vital to the operation of the camera. Under no circumstances must they be touched.
In the unlikely event that they have become dusty, remove the dust by using a camera blower or by wiping them gently with a lens cleaning paper.

Do not point the camera directly at the sun or a laser beam no matter whether it is turned on or not.

Taking images of the sun, laser beams, or other brightly lit subjects for prolonged periods of time may damage the CCD.

Personal computer used

If the same image is displayed for a prolonged period on a personal computer's monitor, the monitor may be damaged. Use of a screen saver is recommended.

Concerning the IP address setting

Do not run the Easy IP Setup Software on a multiple number of personal computers for a single camera and set the IP address at the same time.
Otherwise, you will be unable to complete the proper procedure and set the IP address correctly.

About consumables

The following parts are consumables. Replace them using the lifespans as a guide.
The lifespans may vary depending on the operating environment and operating conditions. The lifespans are a guide for when the unit is used at 35 °C (95 °F).

- Cooling fan: Approx. 15000 hours

Contact your dealer regarding replacements.

Disposal of the unit

When the unit has reached the end of its service life and is to be disposed of, ask a qualified contractor to dispose of the unit properly in order to protect the environment.

Transportation

The camera unit is constructed to rotate easily. As malfunctions in camera movement may occur, transport after securing the camera unit so that it does not rotate.

① Face the lens up, then secure the lens part and camera head together with tape.
② Use tape to secure the camera head and pedestal in several locations.

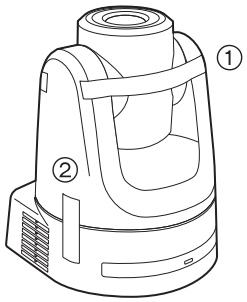

Moving the unit

- When carrying the unit, take care not to apply strong shocks or drop it.
- Remove connection cables when moving the unit.
- Turn off the system power when moving the unit.
- Wrap the unit in cushioning material, etc., when moving the unit so that impacts do not damage it.
- Treat the unit carefully so that vibrations or impacts do not damage it.

Information on software used with this product

This product includes GNU General Public License (GPL) and GNU Lesser General Public License (LGPL) licensed software, and the customer is entitled to obtain, modify, or redistribute the source code for the software.
This product includes MIT Licensed software.
This product includes BSD Licensed software.
For details on obtaining the source codes, visit the following website.
https://pro-av.panasonic.net/en/
However, do not contact Panasonic for questions regarding obtained source codes.

Wireless remote control (optional accessory)

This unit can be operated by remote control using a wireless remote control (model number: AW-RM50G) purchased separately. Check out the following points before using the wireless remote control.

- **Point the wireless remote control at the unit's wireless remote control signal light-sensing area (front panel or back panel), and operate it within a range of 10 meters (32.8 ft) from these areas.**

- **Refer to <Layout of wireless remote control signal light-sensing areas> on the right.**

- **The signal sensing distance is reduced if the angle at which the wireless remote control signals are sensed is increased.**
  The light-sensing sensitivity is reduced to about one-half when the wireless remote control is pointed at an angle of 40 degrees from each position in front of a wireless remote control signal light-sensing area (front panel or back panel).
  If the remote control is operated from the behind the unit, it may be either difficult or impossible to perform the desired operations.

- **When the unit is to be operated by the wireless remote control from the rear, remove the cable cover.**

- **If the unit is installed near fluorescent lights, plasma monitors or other such products or if the unit is exposed to sunlight, the effects of the light may make it impossible for the unit to be operated using the wireless remote control.**
  Be sure to follow the steps below for installation and use.
  - Take steps to ensure that the wireless remote control signal light-sensing area will not be exposed to the light from fluorescent lights, plasma monitors or other such products or from the sun.
  - Install the unit away from fluorescent lights, plasma monitors and other such products.

- **For about 10 minutes even after the batteries have been removed from the wireless remote control, the selection of the operation to be performed (the <CAM1>, <CAM2>, <CAM3> or <CAM4> button which was pressed last) will remain stored in the memory.**
  When a longer period of time elapses, however, the selection is reset to the status established when the <CAM1> button was pressed.

<Layout of wireless remote control signal light-sensing areas>

<NOTE>
- The arrows in the figure below show the light-sensing directions in which the wireless remote control signals travel.

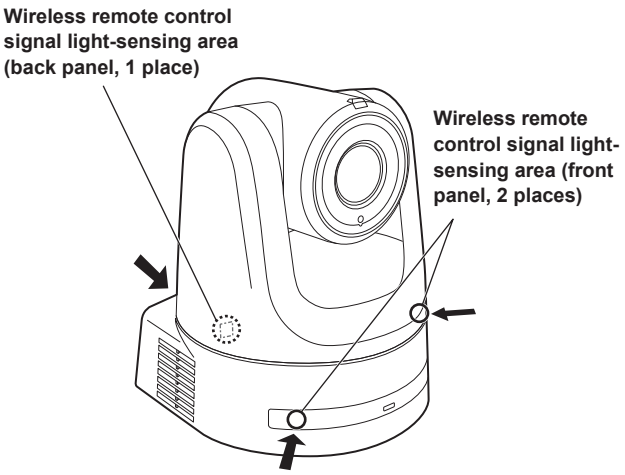

- **Top view**

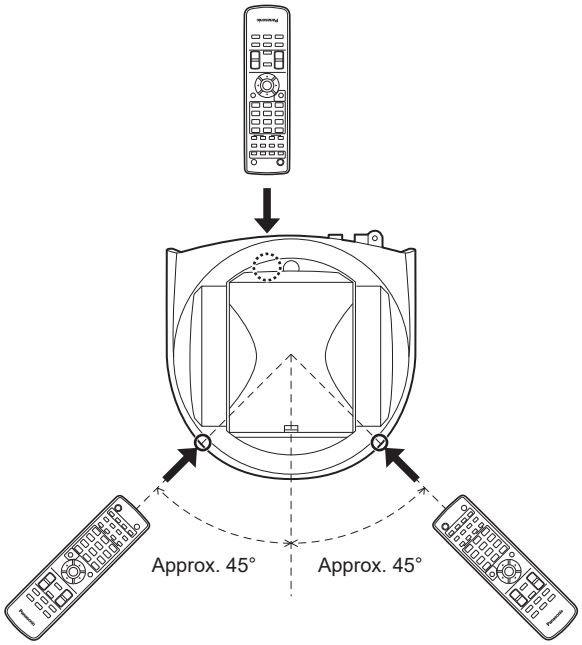

- **Rear panel view**

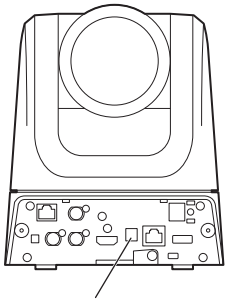

Parts and their functions

Camera unit

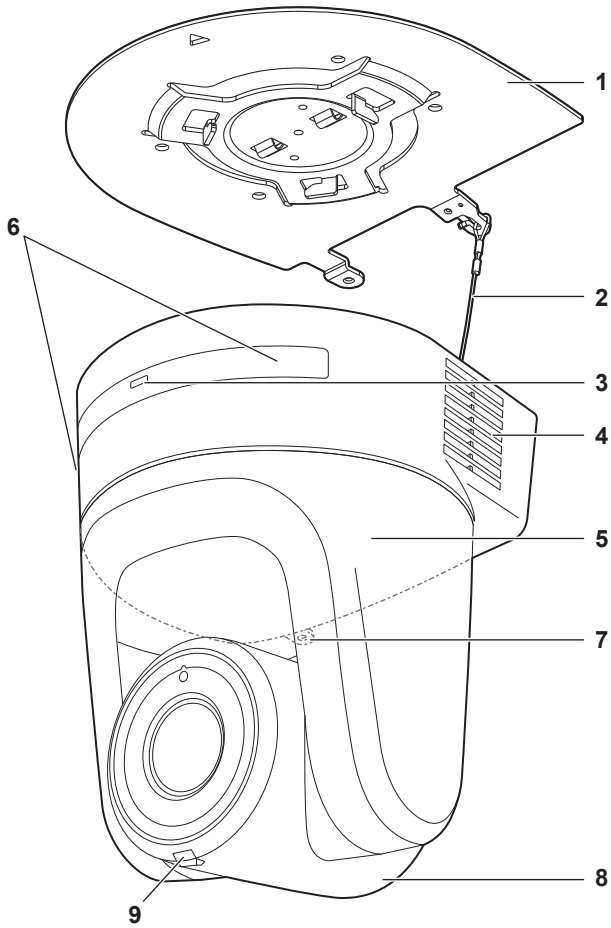

Rear panel

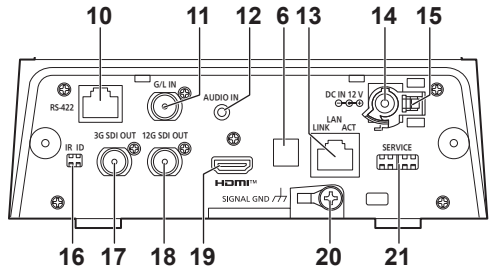

Bottom panel

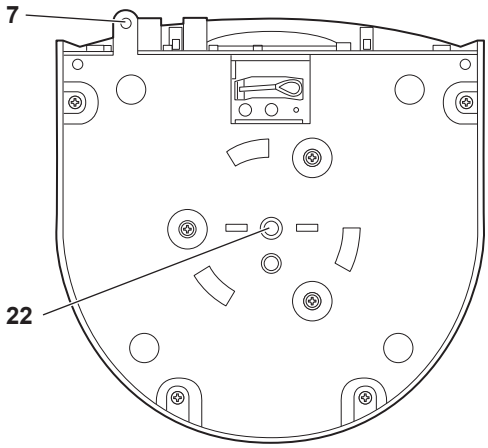

1. Mount bracket for installation surface (supplied accessory)
Mount this bracket onto the installation surface, and then attach the camera main unit to the bracket.

2. Drop-prevention wire
This wire is screwed down to the bottom panel of the camera main unit. Loop the circle part of the wire around the hook of the mount bracket.

3. Status display lamp
This lights in the following way depending on the status of the unit.

Orange	Light up	When the standby status is established
	Blink twice	When a signal not matched by the remote control ID has been received from the wireless remote control (optional accessory) while the power is on
Green	Light up	When the power is on
	Blink twice	When a signal matched by the remote control ID has been received from the wireless remote control (optional accessory) while the power is on
	Blinking rapidly	When the initialization process is complete
Red	Light up	When trouble has occurred in the unit
	Blinking slowly	Firmware being updated
	Blinking rapidly	When a PoE++ software authentication error has occurred

4. Ventilation holes
Blocking the ventilation holes may cause a malfunction. Make sure there is sufficient space around the ventilation holes.

5. Pan head
This rotates in the right and left direction.

6. Wireless remote control signal light-sensing area
There are three light-sensing areas on the front and rear panels of the camera pedestal.

7. Hole for securing the camera pedestal
This hole is provided in the bottom panel of the camera pedestal.

8. Camera head
This rotates in the up and down direction.

9. Tally lamp
This comes on or goes off in response to the control from the controller but only when “On” has been selected as the tally lamp use setting. The tally lamp is red or green.

Parts and their functions (continued)

10.RS-422 connector <RS-422>

This RS-422 connector (RJ-45) is connected when exercising serial control over the unit from an external device. Use a cable with the following specifications for the connection to this connector.
Furthermore, by shorting the R-TALLY signal (2-pin) with the GND (1-pin), it is possible to light the tally lamp (red) in the camera head section of the unit.

<NOTE>

- Do not connect PoE cable to the RS-422 port.
- Do not apply a voltage to the R_TALLY_IN signal pin.
- Menu settings enable the output to pin 7 and pin 8 of the red tally and green tally signals received by the unit. Output is by contact output, and normally is “OPEN”, then it becomes “MAKE” for output. (Operating Instructions (PDF) → “Camera menu items” → “Output 5/5 screen” → “External Output”)

LAN cable*1 (category 5e or above, straight cable), max. 1000 m (3280 ft)

*1 **Use of an STP (shielded twisted pair) cable is recommended.**

Pin No.	Signal	Pin No.	Signal
1	GND	5	TXD+
2	R_TALLY_IN	6	RXD+
3	RXD–	7	OPTION_OUT1
4	TXD–	8	OPTION_OUT2

■ Example OPTION_OUT1, OPTION_OUT2 connector connections

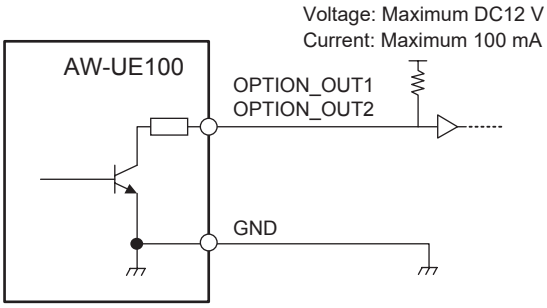

11.G/L IN connector <G/L IN>

This is the external sync signal input connector.
This unit supports BBS (Black Burst Sync) and tri-level synchronization.
Supply to this connector the signals that correspond to the video signal format which has been set.

Frequency: 59.94 Hz, 29.97 Hz

Format	External sync signal input format		
	Tri-level sync		BBS
2160/59.94p	1080/59.94p	1080/59.94i	480/59.94i
2160/29.97p	1080/29.97p 1080/29.97PsF		
1080/59.94p	1080/59.94p		
1080/59.94i	—		
1080/29.97p	1080/29.97p 1080/29.97PsF		
1080/29.97PsF	1080/29.97p 1080/29.97PsF		
1080/23.98p over 59.94i	—		
720/59.94p	720/59.94p		

Frequency: 50 Hz, 25 Hz

Format	External sync signal input format		
	Tri-level sync		BBS
2160/50p	1080/50p	1080/50i	576/50i
2160/25p	1080/25p 1080/25PsF		
1080/50p	1080/50p		
1080/50i	—		
1080/25p	1080/25p 1080/25PsF		
1080/25PsF	1080/25p 1080/25PsF		
720/50p	720/50p		

Frequency: 24 Hz

Format	External sync signal input format
	Tri-level sync
2160/24p	1080/24p 1080/24PsF
1080/24p	

Frequency: 23.98 Hz

Format	External sync signal input format
	Tri-level sync
2160/23.98p	1080/23.98p 1080/23.98PsF
1080/23.98p	
1080/23.98PsF	

12.AUDIO IN connector <AUDIO IN>

Inputs external audio (microphone, line).

13.LAN connector for IP control <LAN LINK/ACT>

This LAN connector (RJ-45) is connected when exercising IP control over the unit from an external device. Use a LAN cable (category 5e or above, max STP 100 m (328 ft)) for connection.

Parts and their functions (continued)

14.DC IN connector <12V ⎓ IN ⊖-◉-⊕>

Connect the AC adaptor supplied with the unit to this connector to supply the DC 12 V voltage to the unit.

> ■ **AC adaptor**
> Be sure to use the supplied AC adaptor.

15.Cable clamp

This is used to hold the cable connection to the DC IN connector and prevent it from becoming disconnected.

16.IR ID switches <IR ID>

CAM1	CAM2	CAM3	CAM4
IR ID	IR ID	IR ID	IR ID

These are used to select the ID of the wireless remote control (optional accessory). (→ page 47)
The IR ID switch settings “CAM1” to “CAM4” correspond to the <CAM1> to <CAM4> buttons on the wireless remote control.

17.3G SDI OUT connector <3G SDI OUT>

This is an SDI video signal output connector. Depending upon the output signal format, 3G-SDI or 1.5G-SDI signals are output.

18.12G SDI OUT connector <12G SDI OUT>

This is an SDI video signal output connector. Depending upon the output signal format, 12G-SDI, 6G-SDI, 3G-SDI or 1.5G-SDI signals are output.

19.HDMI connector <HDMI>

This is the HDMI video output connector.

20.Ground connector

Connects to the ground connector on a wall outlet, ground bar, etc. for grounding. (→ page 28)

21.Service switches <SERVICE>

Perform switch settings before turning the unit on.

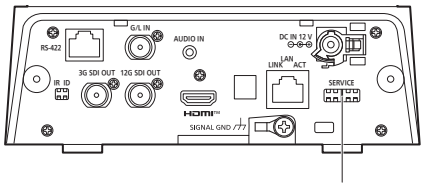

Service switches

Function		Factory settings
SW1	Switches for initialization (Refer to the explanations in “Initialization 1” and “Initialization 2”)	OFF
SW2	Always leave at OFF (used for factory adjustments)	OFF
SW3		OFF
SW4		OFF

Initialization 1

- Reset the user authentication settings and host authentication settings for network connection.
  (This will delete all the registered user information (IDs/passwords) and host information (IP addresses).)
- With the IR ID switches and service switches set as shown below, turn on the power of the unit.

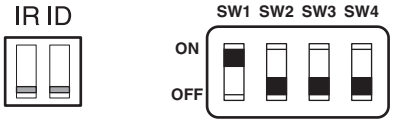

<NOTE>

- When initialization is complete, the status display lamp on the front of the unit blinks green. Set the service switches back to their original positions (SW1 to SW4 all OFF), then restart the unit.

Initialization 2

- The unit is reset to the state it was in at the time of purchase. (All camera menu setting values and network setting values are reset.)
- With the IR ID switches and service switches set as shown below, turn on the power of the unit.

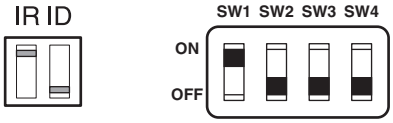

<NOTE>

- When initialization is complete, the status display lamp on the front of the unit blinks green. Set the service switches back to their original positions (SW1 to SW4 all OFF), then restart the unit.

22.Tripod screw holes

(Screw: 1/4-20 UNC, ISO 1222 [6.35 mm (1/4 inches)])

Use these screw holes when securing the unit to a tripod, etc.

■ Output conditions for each video format

Frequency	System Format	HDMI	12G SDI OUT	3G SDI OUT	NDI
59.94Hz	2160/59.94p	2160/59.94p*1 1080/59.94p*2	2160/59.94p*1 1080/59.94p*2	1080/59.94p*2 1080/59.94i*2	2160/59.94p*3
	2160/29.97p	2160/29.97p*4 1080/29.97p	2160/29.97p*4 1080/29.97p	1080/29.97p	2160/29.97p*5
	1080/59.94p	1080/59.94p	1080/59.94p	1080/59.94p 1080/59.94i	1080/59.94p
	1080/59.94i	1080/59.94i	1080/59.94i	1080/59.94i	1080/59.94p
	1080/29.97p	1080/29.97p	1080/29.97p	1080/29.97p	1080/29.97p
	1080/29.97PsF	1080/29.97p	1080/29.97PsF	1080/29.97PsF	1080/29.97p
	1080/23.98p over 59.94i	1080/23.98p over 59.94p	1080/23.98p over 59.94i	1080/23.98p over 59.94i	1080/59.94p
	720/59.94p	720/59.94p	720/59.94p	720/59.94p	720/59.94p
50Hz	2160/50p	2160/50p*6 1080/50p*7	2160/50p*6 1080/50p*7	1080/50p*7 1080/50i*7	2160/50p*8
	2160/25p	2160/25p*9 1080/25p	2160/25p*9 1080/25p	1080/25p	2160/25p*10
	1080/50p	1080/50p	1080/50p	1080/50p 1080/50i	1080/50p
	1080/50i	1080/50i	1080/50i	1080/50i	1080/50p
	1080/25p	1080/25p	1080/25p	1080/25p	1080/25p
	1080/25PsF	1080/25p	1080/25PsF	1080/25PsF	1080/25p
	720/50p	720/50p	720/50p	720/50p	720/50p
24Hz	2160/24p	2160/24p*11 1080/24p	2160/24p*11 1080/24p	1080/24p	2160/24p*12
	1080/24p	1080/24p	1080/24p	1080/24p	1080/24p
23.98Hz	2160/23.98p	2160/23.98p*13 1080/23.98p	2160/23.98p*13 1080/23.98p	1080/23.98p	2160/23.98p*14
	1080/23.98p	1080/23.98p	1080/23.98p	1080/23.98p	1080/23.98p
	1080/23.98PsF	1080/23.98p	1080/23.98PsF	1080/23.98PsF	1080/23.98p

*1 When [UHD Crop] is [Crop(1080)] or [Crop(720)], 2160/59.94p cannot be selected.
*2 When [UHD Crop] is [Crop(720)], output is 720/59.94p.
*3 When [UHD Crop] is [Crop(1080)], output is 1080/59.94p and when [UHD Crop] is [Crop(720)], output is 720/59.94p.
*4 When [UHD Crop] is [Crop(1080)], 2160/29.97p cannot be selected.
*5 When [UHD Crop] is [Crop(1080)], output is 1080/29.97p.
*6 When [UHD Crop] is [Crop(1080)] or [Crop(720)], 2160/50p cannot be selected.
*7 When [UHD Crop] is [Crop(720)], output is 720/50p.
*8 When [UHD Crop] is [Crop(1080)], output is 1080/50p and when [UHD Crop] is [Crop(720)], output is 720/50p.
*9 When [UHD Crop] is [Crop(1080)], 2160/25p cannot be selected.
*10 When [UHD Crop] is [Crop(1080)], output is 1080/25p.
*11 When [UHD Crop] is [Crop(1080)], 2160/24p cannot be selected.
*12 When [UHD Crop] is [Crop(1080)], output is 1080/24p.
*13 When [UHD Crop] is [Crop(1080)], 2160/23.98p cannot be selected.
*14 When [UHD Crop] is [Crop(1080)], output is 1080/23.98p.

Parts and their functions (continued)

■ IP video transmission output (multi-channel display)

• **When "Streaming mode" is set to "H.265"**

Settings		H.265(1)	H.265(2)	H.264(1)	H.264(2)	H.264(3)	H.264(4)	JPEG(1)	JPEG(2)	JPEG(3)
Resolution		1920×1080 1280×720	1920×1080 1280×720 640×360	—	—	—	—	1920×1080 1280×720 640×360 320×180	640×360 320×180	640×360 320×180
Frame rate	**System frequency 59.94Hz**	60fps 30fps	60fps 30fps	—	—	—	—	30fps 15fps 5fps 1fps	30fps 15fps 5fps 1fps	30fps 15fps 5fps 1fps
	System frequency 50Hz	50fps 25fps	50fps 25fps	—	—	—	—	25fps 12.5fps 5fps 1fps	25fps 12.5fps 5fps 1fps	25fps 12.5fps 5fps 1fps
	System frequency 29.97Hz	30fps	30fps	—	—	—	—	30fps 15fps 5fps 1fps	30fps 15fps 5fps 1fps	30fps 15fps 5fps 1fps
	System frequency 25Hz	25fps	25fps	—	—	—	—	25fps 12.5fps 5fps 1fps	25fps 12.5fps 5fps 1fps	25fps 12.5fps 5fps 1fps
	System frequency 24/23.98Hz	24fps	24fps	—	—	—	—	24fps 12fps 4fps 1fps	24fps 12fps 4fps 1fps	24fps 12fps 4fps 1fps

• The H.265 transmission mode (Transmission priority) cannot be selected.
• When the system frequency is 24/23.98Hz, the resolution for H.265(1) and H.265(2) is limited to 1920×1080.
• You cannot make settings above the resolution and frame rate set by the system format.

• **When "Streaming mode" is set to "H.265 (UHD)"**

Settings		H.265(1)	H.265(2)	H.264(1)	H.264(2)	H.264(3)	H.264(4)	JPEG(1)	JPEG(2)	JPEG(3)
Resolution		3840×2160	—	—	—	—	—	1920×1080 1280×720 640×360 320×180	640×360 320×180	640×360 320×180
Frame rate	**System frequency 59.94Hz**	30fps	—	—	—	—	—	30fps 15fps 5fps 1fps	30fps 15fps 5fps 1fps	30fps 15fps 5fps 1fps
	System frequency 50Hz	25fps	—	—	—	—	—	25fps 12.5fps 5fps 1fps	25fps 12.5fps 5fps 1fps	25fps 12.5fps 5fps 1fps
	System frequency 29.97Hz	30fps	—	—	—	—	—	30fps 15fps 5fps 1fps	30fps 15fps 5fps 1fps	30fps 15fps 5fps 1fps
	System frequency 25Hz	25fps	—	—	—	—	—	25fps 12.5fps 5fps 1fps	25fps 12.5fps 5fps 1fps	25fps 12.5fps 5fps 1fps
	System frequency 24/23.98Hz	24fps	—	—	—	—	—	24fps 12fps 4fps 1fps	24fps 12fps 4fps 1fps	24fps 12fps 4fps 1fps

• The H.265(UHD) transmission mode (Transmission priority) cannot be selected.

Parts and their functions (continued)

• **When "Streaming mode" is set to "H.264"**

Settings		H.265(1)	H.265(2)	H.264(1)	H.264(2)	H.264(3)	H.264(4)	JPEG(1)	JPEG(2)	JPEG(3)
Resolution		—	—	1920×1080 1280×720	1920×1080 1280×720 640×360 320×180	1280×720 640×360 320×180	1280×720 640×360 320×180	1920×1080 1280×720 640×360 320×180	640×360 320×180	640×360 320×180
Frame rate	**System frequency 59.94Hz**	—	—	60fps 30fps 15fps 5fps	60fps 30fps 15fps 5fps	30fps 15fps 5fps	30fps 15fps 5fps	30fps 15fps 5fps 1fps	30fps 15fps 5fps 1fps	30fps 15fps 5fps 1fps
	System frequency 50Hz	—	—	50fps 25fps 12.5fps 5fps	50fps 25fps 12.5fps 5fps	25fps 12.5fps 5fps	25fps 12.5fps 5fps	25fps 12.5fps 5fps 1fps	25fps 12.5fps 5fps 1fps	25fps 12.5fps 5fps 1fps
	System frequency 29.97Hz	—	—	30fps 15fps 5fps	30fps 15fps 5fps	30fps 15fps 5fps	30fps 15fps 5fps	30fps 15fps 5fps 1fps	30fps 15fps 5fps 1fps	30fps 15fps 5fps 1fps
	System frequency 25Hz	—	—	25fps 12.5fps 5fps	25fps 12.5fps 5fps	25fps 12.5fps 5fps	25fps 12.5fps 5fps	25fps 12.5fps 5fps 1fps	25fps 12.5fps 5fps 1fps	25fps 12.5fps 5fps 1fps
	System frequency 24/23.98Hz	—	—	24fps	24fps	—	—	24fps 12fps 4fps 1fps	24fps 12fps 4fps 1fps	24fps 12fps 4fps 1fps

• The available options for the H.264 transmission mode (Transmission priority) are limited to 30fps or lower (excluding 24fps).
• When the system frequency is 24/23.98Hz, the resolution for H.264(1) and H.264(2) is limited to 1920×1080.
• You cannot make settings above the resolution and frame rate set by the system format.

• **When "Streaming mode" is set to "H.264 (UHD)"**

Settings		H.265(1)	H.265(2)	H.264(1)	H.264(2)	H.264(3)	H.264(4)	JPEG(1)	JPEG(2)	JPEG(3)
Resolution		—	—	3840×2160	—	—	—	1920×1080 1280×720 640×360 320×180	640×360 320×180	640×360 320×180
Frame rate	**System frequency 59.94Hz**	—	—	60fps 30fps	—	—	—	30fps 15fps 5fps 1fps	30fps 15fps 5fps 1fps	30fps 15fps 5fps 1fps
	System frequency 50Hz	—	—	50fps 25fps	—	—	—	25fps 12.5fps 5fps 1fps	25fps 12.5fps 5fps 1fps	25fps 12.5fps 5fps 1fps
	System frequency 29.97Hz	—	—	30fps	—	—	—	30fps 15fps 5fps 1fps	30fps 15fps 5fps 1fps	30fps 15fps 5fps 1fps
	System frequency 25Hz	—	—	25fps	—	—	—	25fps 12.5fps 5fps 1fps	25fps 12.5fps 5fps 1fps	25fps 12.5fps 5fps 1fps
	System frequency 24/23.98Hz	—	—	24fps	—	—	—	24fps 12fps 4fps 1fps	24fps 12fps 4fps 1fps	24fps 12fps 4fps 1fps

• The H.264(UHD) transmission mode (Transmission priority) cannot be selected.

Parts and their functions (continued)

• **When "Streaming mode" is set to "JPEG (UHD)"**

Settings		H.265(1)	H.265(2)	H.264(1)	H.264(2)	H.264(3)	H.264(4)	JPEG(1)	JPEG(2)	JPEG(3)
Resolution		—	—	1920×1080 1280×720	1920×1080 1280×720 640×360 320×180	1280×720 640×360 320×180	1280×720 640×360 320×180	3840×2160	—	—
Frame rate	**System frequency 59.94Hz**	—	—	60fps 30fps 15fps 5fps	60fps 30fps 15fps 5fps	30fps 15fps 5fps	30fps 15fps 5fps	5fps 1fps	—	—
	System frequency 50Hz	—	—	50fps 25fps 12.5fps 5fps	50fps 25fps 12.5fps 5fps	25fps 12.5fps 5fps	25fps 12.5fps 5fps	5fps 1fps	—	—
	System frequency 29.97Hz	—	—	30fps 15fps 5fps	30fps 15fps 5fps	30fps 15fps 5fps	30fps 15fps 5fps	5fps 1fps	—	—
	System frequency 25Hz	—	—	25fps 12.5fps 5fps	25fps 12.5fps 5fps	25fps 12.5fps 5fps	25fps 12.5fps 5fps	5fps 1fps	—	—
	System frequency 24/23.98Hz	—	—	24fps	24fps	—	—	4fps 1fps	—	—

• The available options for the H.264 transmission mode (Transmission priority) are limited to 30fps or lower (excluding 24fps).
• When the system frequency is 24/23.98Hz, the resolution for H.264(1) and H.264(2) is limited to 1920×1080.

• **When "Streaming mode" is set to "RTMP"**

Settings		H.265(1)	H.265(2)	H.264(1)	H.264(2)	H.264(3)	H.264(4)	JPEG(1)	JPEG(2)	JPEG(3)
Resolution		—	—	1920×1080 1280×720	—	—	—	1920×1080 1280×720 640×360 320×180	640×360 320×180	640×360 320×180
Frame rate	**System frequency 59.94Hz**	—	—	60fps 30fps 15fps 5fps	—	—	—	30fps 15fps 5fps 1fps	30fps 15fps 5fps 1fps	30fps 15fps 5fps 1fps
	System frequency 50Hz	—	—	50fps 25fps 12.5fps 5fps	—	—	—	25fps 12.5fps 5fps 1fps	25fps 12.5fps 5fps 1fps	25fps 12.5fps 5fps 1fps
	System frequency 29.97Hz	—	—	30fps 15fps 5fps	—	—	—	30fps 15fps 5fps 1fps	30fps 15fps 5fps 1fps	30fps 15fps 5fps 1fps
	System frequency 25Hz	—	—	25fps 12.5fps 5fps	—	—	—	25fps 12.5fps 5fps 1fps	25fps 12.5fps 5fps 1fps	25fps 12.5fps 5fps 1fps
	System frequency 24/23.98Hz	—	—	24fps	—	—	—	24fps 12fps 4fps 1fps	24fps 12fps 4fps 1fps	24fps 12fps 4fps 1fps

• The available options for the H.264 transmission mode (Transmission priority) are limited to 30fps or lower (excluding 24fps).
• When the system frequency is 24/23.98Hz, the resolution for H.264(1) and H.264(2) is limited to 1920×1080.
• You cannot make settings above the resolution and frame rate set by the system format.

Parts and their functions (continued)

• **When “Streaming mode” is set to “RTMP(UHD)”**

Settings		H.265(1)	H.265(2)	H.264(1)	H.264(2)	H.264(3)	H.264(4)	JPEG(1)	JPEG(2)	JPEG(3)
Resolution		—	—	3840×2160	—	—	—	1920×1080 1280×720 640×360 320×180	640×360 320×180	640×360 320×180
Frame rate	**System frequency 59.94Hz**	—	—	60fps 30fps	—	—	—	30fps 15fps 5fps 1fps	30fps 15fps 5fps 1fps	30fps 15fps 5fps 1fps
	System frequency 50Hz	—	—	50fps 25fps	—	—	—	25fps 12.5fps 5fps 1fps	25fps 12.5fps 5fps 1fps	25fps 12.5fps 5fps 1fps
	System frequency 29.97Hz	—	—	30fps	—	—	—	30fps 15fps 5fps 1fps	30fps 15fps 5fps 1fps	30fps 15fps 5fps 1fps
	System frequency 25Hz	—	—	25fps	—	—	—	25fps 12.5fps 5fps 1fps	25fps 12.5fps 5fps 1fps	25fps 12.5fps 5fps 1fps
	System frequency 24/23.98Hz	—	—	24fps	—	—	—	24fps 12fps 4fps 1fps	24fps 12fps 4fps 1fps	24fps 12fps 4fps 1fps

• The RTMP(UHD) transmission mode (Transmission priority) cannot be selected.

• **When “Streaming mode” is set to “SRT(H.265)”**

Settings		H.265(1)	H.265(2)	H.264(1)	H.264(2)	H.264(3)	H.264(4)	JPEG(1)	JPEG(2)	JPEG(3)
Resolution		1920×1080 1280×720	—	—	—	—	—	1920×1080 1280×720 640×360 320×180	640×360 320×180	640×360 320×180
Frame rate	**System frequency 59.94Hz**	60fps 30fps	—	—	—	—	—	30fps 15fps 5fps 1fps	30fps 15fps 5fps 1fps	30fps 15fps 5fps 1fps
	System frequency 50Hz	50fps 25fps	—	—	—	—	—	25fps 12.5fps 5fps 1fps	25fps 12.5fps 5fps 1fps	25fps 12.5fps 5fps 1fps
	System frequency 29.97Hz	30fps	—	—	—	—	—	30fps 15fps 5fps 1fps	30fps 15fps 5fps 1fps	30fps 15fps 5fps 1fps
	System frequency 25Hz	25fps	—	—	—	—	—	25fps 12.5fps 5fps 1fps	25fps 12.5fps 5fps 1fps	25fps 12.5fps 5fps 1fps
	System frequency 24/23.98Hz	—	—	—	—	—	—	—	—	—

• The SRT(H.265) transmission mode (Transmission priority) cannot be selected.
• It is not possible to select SRT(H.265) mode when the system frequency is 24/23.98Hz.
• You cannot make settings above the resolution and frame rate set by the system format.

Parts and their functions (continued)

• **When "Streaming mode" is set to "SRT(H.265 UHD)"**

Settings		H.265(1)	H.265(2)	H.264(1)	H.264(2)	H.264(3)	H.264(4)	JPEG(1)	JPEG(2)	JPEG(3)
Resolution		3840×2160	—	—	—	—	—	1920×1080 1280×720 640×360 320×180	640×360 320×180	640×360 320×180
Frame rate	**System frequency 59.94Hz**	30fps	—	—	—	—	—	30fps 15fps 5fps 1fps	30fps 15fps 5fps 1fps	30fps 15fps 5fps 1fps
	System frequency 50Hz	25fps	—	—	—	—	—	25fps 12.5fps 5fps 1fps	25fps 12.5fps 5fps 1fps	25fps 12.5fps 5fps 1fps
	System frequency 29.97Hz	30fps	—	—	—	—	—	30fps 15fps 5fps 1fps	30fps 15fps 5fps 1fps	30fps 15fps 5fps 1fps
	System frequency 25Hz	25fps	—	—	—	—	—	25fps 12.5fps 5fps 1fps	25fps 12.5fps 5fps 1fps	25fps 12.5fps 5fps 1fps
	System frequency 24/23.98Hz	—	—	—	—	—	—	—	—	—

• The SRT(H.265 UHD) transmission mode (Transmission priority) cannot be selected.
• It is not possible to select SRT(H.265 UHD) mode when the system frequency is 24/23.98Hz.

• **When "Streaming mode" is set to "SRT(H.264)"**

Settings		H.265(1)	H.265(2)	H.264(1)	H.264(2)	H.264(3)	H.264(4)	JPEG(1)	JPEG(2)	JPEG(3)
Resolution		—	—	1920×1080 1280×720	—	—	—	1920×1080 1280×720 640×360 320×180	640×360 320×180	640×360 320×180
Frame rate	**System frequency 59.94Hz**	—	—	60fps 30fps 15fps 5fps	—	—	—	30fps 15fps 5fps 1fps	30fps 15fps 5fps 1fps	30fps 15fps 5fps 1fps
	System frequency 50Hz	—	—	50fps 25fps 12.5fps 5fps	—	—	—	25fps 12.5fps 5fps 1fps	25fps 12.5fps 5fps 1fps	25fps 12.5fps 5fps 1fps
	System frequency 29.97Hz	—	—	30fps 15fps 5fps	—	—	—	30fps 15fps 5fps 1fps	30fps 15fps 5fps 1fps	30fps 15fps 5fps 1fps
	System frequency 25Hz	—	—	25fps 12.5fps 5fps	—	—	—	25fps 12.5fps 5fps 1fps	25fps 12.5fps 5fps 1fps	25fps 12.5fps 5fps 1fps
	System frequency 24/23.98Hz	—	—	—	—	—	—	—	—	—

• The available options for the SRT(H.264) transmission mode (Transmission priority) are limited to 30fps or lower (excluding 24fps).
• It is not possible to select SRT(H.264) mode when the system frequency is 24/23.98Hz.
• You cannot make settings above the resolution and frame rate set by the system format.

Parts and their functions (continued)

• **When "Streaming mode" is set to "SRT(H.264 UHD)"**

Settings		H.265(1)	H.265(2)	H.264(1)	H.264(2)	H.264(3)	H.264(4)	JPEG(1)	JPEG(2)	JPEG(3)
Resolution		—	—	3840×2160	—	—	—	1920×1080 1280×720 640×360 320×180	640×360 320×180	640×360 320×180
Frame rate	**System frequency 59.94Hz**	—	—	60fps 30fps	—	—	—	30fps 15fps 5fps 1fps	30fps 15fps 5fps 1fps	30fps 15fps 5fps 1fps
	System frequency 50Hz	—	—	50fps 25fps	—	—	—	25fps 12.5fps 5fps 1fps	25fps 12.5fps 5fps 1fps	25fps 12.5fps 5fps 1fps
	System frequency 29.97Hz	—	—	30fps	—	—	—	30fps 15fps 5fps 1fps	30fps 15fps 5fps 1fps	30fps 15fps 5fps 1fps
	System frequency 25Hz	—	—	25fps	—	—	—	25fps 12.5fps 5fps 1fps	25fps 12.5fps 5fps 1fps	25fps 12.5fps 5fps 1fps
	System frequency 24/23.98Hz	—	—	—	—	—	—	—	—	—

• The SRT(H.264 UHD) transmission mode (Transmission priority) cannot be selected.
• It is not possible to select SRT(H.264 UHD) mode when the system frequency is 24/23.98Hz.

• **When "Streaming mode" is set to "NDI|HX"**

Settings		NDI|HX	JPEG(1)
Resolution		1920×1080 1280×720	1280×720 640×360 320×180
Frame rate	**System frequency 59.94Hz**	60fps 30fps 15fps 5fps	30fps 15fps 5fps 1fps
	System frequency 50Hz	50fps 25fps 12.5fps 5fps	25fps 12.5fps 5fps 1fps
	System frequency 29.97Hz	30fps 15fps 5fps	30fps 15fps 5fps 1fps
	System frequency 25Hz	25fps 12.5fps 5fps	25fps 12.5fps 5fps 1fps

• It is not possible to select NDI|HX mode when the system frequency is 24/23.98Hz.
• The transmission mode (Transmission priority) cannot be selected.
• You cannot make settings above the resolution and frame rate set by the system format.

Parts and their functions (continued)

- **When “Streaming mode” is set to “High bandwidth NDI”**

Settings		H.265(1)	H.265(2)	H.264(1)	H.264(2)	H.264(3)	H.264(4)	JPEG(1)	JPEG(2)	JPEG(3)
Resolution		—	—	—	—	—	—	1920×1080 1280×720 640×360 320×180	—	—
Frame rate	**System frequency 59.94Hz**	—	—	—	—	—	—	30fps 15fps 5fps 1fps	—	—
	System frequency 50Hz	—	—	—	—	—	—	25fps 12.5fps 5fps 1fps	—	—
	System frequency 29.97Hz	—	—	—	—	—	—	30fps 15fps 5fps 1fps	—	—
	System frequency 25Hz	—	—	—	—	—	—	25fps 12.5fps 5fps 1fps	—	—
	System frequency 24/23.98Hz	—	—	—	—	—	—	24fps 12fps 4fps 1fps	—	—

- You cannot make settings above the resolution and frame rate set by the system format.

Parts and their functions (continued)

Wireless remote control: AW-RM50G (optional accessory)

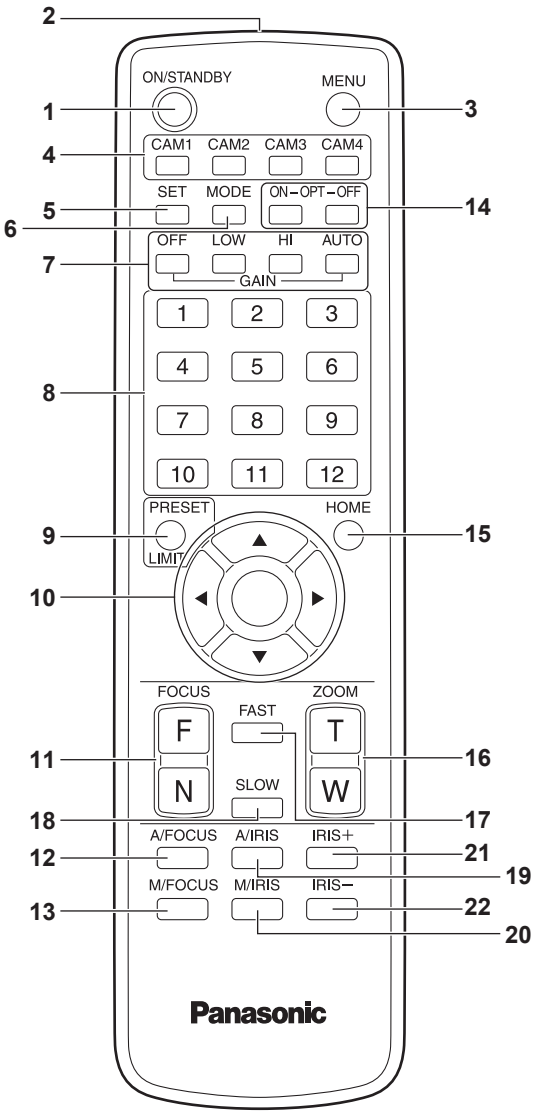

1. ON/STANDBY button <ON/STANDBY>
Each time this is pressed for 2 seconds, operation switches between turning on the unit's power and establishing the standby status.

2. Signal transmission window

3. MENU button <MENU>
Each time this is pressed for 2 seconds, operation switches between displaying the unit's camera menu and exiting the camera menu.
When it is pressed quickly (for less than 2 seconds) while a camera menu is displayed, the setting change is canceled.
Furthermore, the pan and tilt movement range limits (limiters) are set and released by operating the <MENU> button, <PRESET/LIMIT> button and the pan/tilt buttons (<▲> <▼> <◀> <▶>).
For details, refer to the Operating Instructions (PDF) → "Setting/ releasing the limiters".

4. CAM1 to CAM4 buttons
<CAM1> <CAM2> <CAM3> <CAM4>
Selects a camera to be operated.
Once a button has been selected, the unit corresponding to the selected button can be operated.

5. SET button <SET>
If this button is held down for 2 seconds when the [AWB A] memory or [AWB B] memory has been selected for the white balance adjustment, the black balance is adjusted automatically and registered in the memory selected.
When this button is pressed for under 2 seconds, only the white balance is adjusted automatically.

6. MODE button <MODE>
This is used to select the video signals which are output from the unit. Each time it is pressed, the signals are switched between the color bar signals and camera video signals.
<NOTE>
- When [Audio] is set to [On] and the color bar is displayed, a test sound (1 kHz) is output. Be cautious of the volume on external devices.

7. GAIN button <OFF> <LOW> <HI> <AUTO>
These are used to set the gain.
The gain increase can be set in three steps using the <OFF>, <LOW> and <HI> buttons.
<LOW> is set to 9 dB, and <HI> is set to 18 dB.
When the <AUTO> button is pressed, the AGC function is activated, and the gain is adjusted automatically depending on the light quantity.
The maximum gain of the AGC function can be set using the camera menu.

8. Preset memory call buttons <1> to <12>
These are used to call the information on the unit's directions and other settings, which have been registered in the unit's preset memories No.1 to No.12, and reproduce those settings.
Settings in preset memories No.13 and above cannot be called from the wireless remote control.

9. PRESET/LIMIT button <PRESET/LIMIT>
This is used to register the settings in the preset memories or set or release the limiters.
When a preset memory call button is pressed while the <PRESET/ LIMIT> button is held down, the information on the unit's current direction and other settings is registered in the call button.
Preset memory call buttons <1> to <12> correspond to the unit's No.1 to No.12 preset memories.
Furthermore, the pan and tilt movement range limits (limiters) are set and released by operating the <PRESET/LIMIT> button, <MENU> button and the pan/tilt buttons (<▲> <▼> <◀> <▶>).
For details, refer to the Operating Instructions (PDF) → "Setting/ releasing the limiters".

10. Pan-tilt buttons and menu operation buttons
<▲> <▼> <◀> <▶> <○>
1) These are used to change the unit's direction.
The unit is tilted in the up/down direction using the <▲> and <▼> buttons and panned in the left/right direction using the <◀> and <▶> buttons.
The <○> button does not work during tilting and panning.
When the <▲> or <▼> and <◀> or <▶> buttons are pressed at the same time, the unit moves diagonally.
2) The buttons are used for menu operations when the unit displays the camera menus.
Use the <▲> , <▼> (<◀>, <▶>) buttons to select the menu items.
When a selected item has a sub-menu, the sub-menu will be displayed by pressing the <○> button.
When the cursor is aligned with a particular item and the <○> button is pressed on the setting menu at the bottom hierarchical level, the setting of the selected item blinks.
When the <○> button is pressed after the setting has been changed using the <▲> and <▼> (<◀> and <▶>) buttons, the setting stops blinking, and the new setting is entered.
A setting for a regular menu item is reflected immediately if it is changed while it is still flashing.
If the <MENU> button is pressed quickly (for less than 2 seconds) while the setting is in the blinking status, the change will be canceled, and the setting selected prior to the change will be restored.

<NOTE>
- To prevent malfunctioning, there are a number of menu items ([Scene], [Format] and [Frequency]) whose setting is not reflected immediately even if it is changed while it is still flashing.
It is reflected only after the <○> button has been pressed, causing the setting to stop flashing and the new setting to be entered.
- A confirmation screen appears before the settings of some menu items are to be entered.

Parts and their functions (continued)

11.FOCUS button <F> <N>
These are used to adjust the lens focus manually when the manual setting is established for the lens focus.
The focus is adjusted in the far using the <F> button and in the near using the <N> button.

12.A/FOCUS button <A/FOCUS>
This is used when automatically adjusting the lens focus.

13.M/FOCUS button <M/FOCUS>
This is used when manually adjusting the lens focus.
The FOCUS buttons (<F> and <N>) are used when performing the actual adjustment.

14.OPT button <ON> <OFF>
Turn night mode on/off.
<NOTE>
- In night mode, video output will be in black and white. In addition, the iris will be forcibly opened.
- White balance adjustment is not possible in night mode.
- ND filter switching is not possible in night mode.

15.HOME button <HOME>
When this is pressed for 2 seconds, the unit's direction (panning or tilting) returns to the reference position.

16.ZOOM button <T> <W>
These are used to adjust the lens zoom.
The zoom is adjusted in the wide-angle using the <W> button and in the telephoto using the <T> button.

17.FAST button <FAST>
This is used to change the movement speed at which the panning, tilting, zooming and focusing operations are performed to the high speed.
When the button is tapped, the movement speed can be set to the normal high-speed operation. When the button is held down, it can be set to an even faster high-speed operation. Tap the button to return the movement speed to the normal high-speed operation.
<NOTE>
- The operating speed for panning and tilting when the preset memory settings have been called can be changed using the "Preset Speed" item of the camera menu.

18.SLOW button <SLOW>
This is used to change the movement speed at which the panning, tilting, zooming and focusing operations are performed to the low speed.
When the button is tapped, the movement speed can be set to the normal low-speed operation. When the button is held down, it can be set to an even slower low-speed operation. Tap the button to return the movement speed to the normal low-speed operation.

19.A/IRIS button <A/IRIS>
This establishes the setting for adjusting the lens iris automatically in line with the light quantity.

20.M/IRIS button <M/IRIS>
This establishes the setting for adjusting the lens iris manually.
The <IRIS +> and <IRIS –> buttons are used when performing the actual adjustment.

21.IRIS + button <IRIS +>
This is used to adjust the lens iris in the opening direction.

22.IRIS – button <IRIS –>
This is used to adjust the lens iris in the closing direction.

Setting the remote control IDs

The wireless remote control (optional accessory) is capable of operating up to four units.
IDs are used to set which units are selected when the <CAM1>, <CAM2>, <CAM3> and <CAM4> buttons on the wireless remote control have been pressed.

- When operating a multiple number of these units using wireless remote controls, set a different remote control ID for each control.
- When using one unit, set the remote control ID to "CAM1" unless the setting needs to be changed.

■ Setting procedure

Operate the IR ID switches on the unit's rear panel, and select "CAM1", "CAM2", "CAM3" or "CAM4" as the remote control ID. (→ page 37)
The IR ID switch settings "CAM1" to "CAM4" correspond to the <CAM1> to <CAM4> buttons on the wireless remote control.
(The factory setting is "CAM1".)

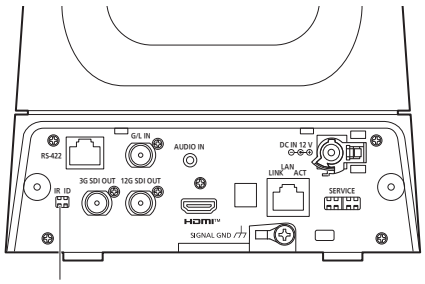

IR ID switches

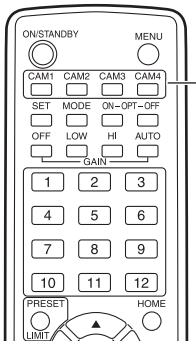

<CAM1> to <CAM4> buttons

Use the Easy IP Setup Software to establish the unit's settings

The settings related to the unit's network can be established using the Easy IP Setup Software.
You can obtain Easy IP Setup Software (EasyIPSetup.exe) by downloading it from the following website.
https://pro-av.panasonic.net/en/

To establish the settings for a multiple number of units, the settings must be selected for each camera involved.
If the settings cannot be established using the Easy IP Setup Software, select the settings separately for the unit and personal computer on the Network setup screen [Network] of the setting menu. (Operating Instructions (PDF) → "Web screen configurations" → "Network setup screen [Network]")

<NOTE>
- If, after the network settings have been established, another device in the same network has the same IP address, the network operations will not be performed properly.
  Set the IP address in such a way that it does not duplicate an existing IP address.
- Do not establish network settings from a multiple number of Easy IP Setup Software programs at the same time for a single camera.
  Similarly, do not perform the "Auto IP setting" operation of the remote camera controller AW-RP150 or AW-RP60 at the same time.
  The IP address settings may no longer be recognized as a result.
- To enhance the security of the Easy IP Setup Software, it will not be possible to make network settings for the target camera once about 20 minutes or more have elapsed after turning the power of the camera on. (Operating Instructions (PDF) → "Web screen configurations" → "Network setup screen [Network]" → "Common (to IPv6/IPv4)" → "Easy IP Setup accommodate period")
- The Easy IP Setup Software cannot be used from a different subnet via a router.
- Use Easy IP Setup Software ver. 4.25R00 or newer.

1. Start the Easy IP Setup Software.

2. Click the [Search] button.

3. Click the MAC address/IPv4 address of the camera to be set, and click the [Network Settings] button.

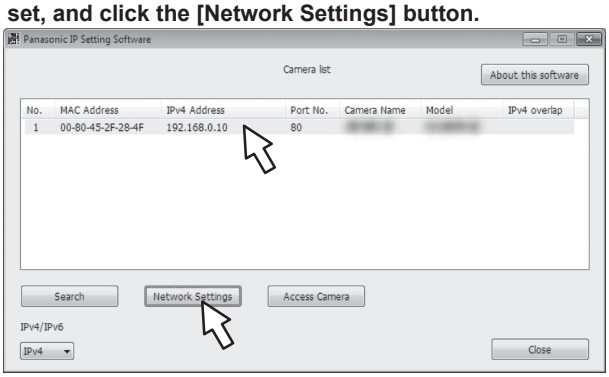

<NOTE>
- When a DHCP server is being used, the IP address allocated to the unit can be checked by clicking the [Search] button of the Easy IP Setup Software.
- If the same IP address is used for any additional cameras, the numbers of the additional cameras will be displayed in the [IPv4 overlap] column of the cameras concerned.
- When the [Access Camera] button is clicked, the Live screen of the selected camera is displayed.
- This unit supports an IPv4/IPv6 switching function.

4. Input the network items, and click the [Save] button.

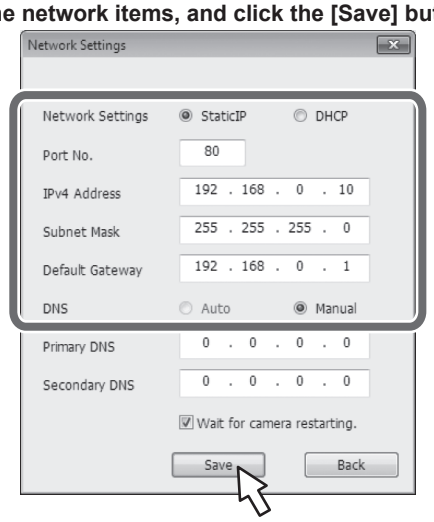

<NOTE>
- When a DHCP server is being used, [DNS] of the Easy IP Setup Software can be set to [Auto].
- After the [Save] button is clicked, it takes about 1 minute for the settings in the unit to be completed. If the AC adaptor or LAN cable is disconnected before the settings are completed, the settings will be canceled. In this case, repeat the steps to establish the settings.
- When a firewall (including software) has been introduced, enable access to all the UDP ports.

Use the Easy IP Setup Software Version.2 to establish the unit's settings

The settings related to the unit's network can be established using the Easy IP Setup Software Version.2.
You can obtain Easy IP Setup Software Version.2 (EasyIPSetupV2.exe) by downloading it from the following website.
https://pro-av.panasonic.net/en/

If the settings cannot be established using the Easy IP Setup Software Version.2, select the settings separately for the unit and personal computer on the Network setup screen [Network] of the setting menu. (Operating Instructions (PDF) → "Web screen configurations" → "Network setup screen [Network]")

<NOTE>
- If, after the network settings have been established, another device in the same network has the same IP address, the network operations will not be performed properly.
  Set the IP address in such a way that it does not duplicate an existing IP address.
- Do not establish network settings from a multiple number of Easy IP Setup Software Version.2 programs at the same time for a single camera.
  Similarly, do not perform the "Auto IP setting" operation of the remote camera controller AW-RP150 or AW-RP60 at the same time.
  The IP address settings may no longer be recognized as a result.
- To enhance the security of the Easy IP Setup Software Version.2, it will not be possible to make network settings for the target camera once about 20 minutes or more have elapsed after turning the power of the camera on. (Operating Instructions (PDF) → "Web screen configurations" → "Network setup screen [Network]" → "Common (to IPv6/IPv4)" → "Easy IP Setup accommodate period")
- The Easy IP Setup Software Version.2 cannot be used from a different subnet via a router.

Network settings (continued)

■ Network Settings

1. Start the Easy IP Setup Software Version.2.

2. Click the [Search] button.

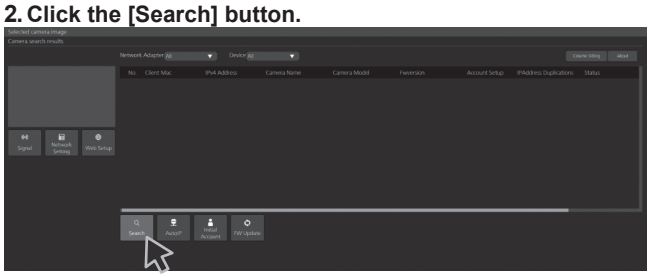

3. Click the camera to be set, and click the [Network Settings] button.

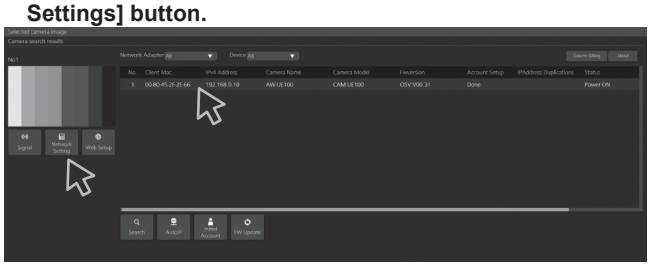

<NOTE>

- When a DHCP server is being used, the IP address allocated to the unit can be checked by clicking the [Search] button of the Easy IP Setup Software Version.2.
- If the same IP address is used for any additional cameras, the numbers of the additional cameras will be displayed in the [IPv4 overlap] column of the cameras concerned.
- When the [Access Camera] button is clicked, the Live screen of the selected camera is displayed.
- This unit supports an IPv4/IPv6 switching function.

4. Input the network items, and click the [OK] button.

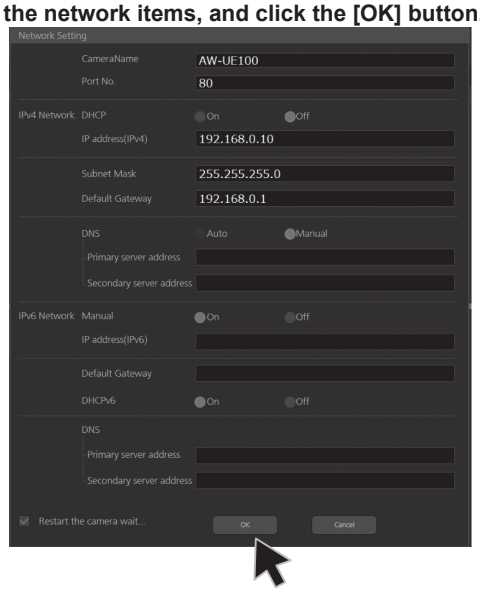

■ Automatically assigning IP addresses

1. Start the Easy IP Setup Software Version.2.

2. Click the [Auto IP] button.

<NOTE>

- Care must be taken when this function is used because network settings made manually are overwritten as the IP addresses for the remote cameras connected within the same network are automatically assigned.

■ Updating the firmware

1. Start the Easy IP Setup Software Version.2.

2. Click the [FW Update] button.

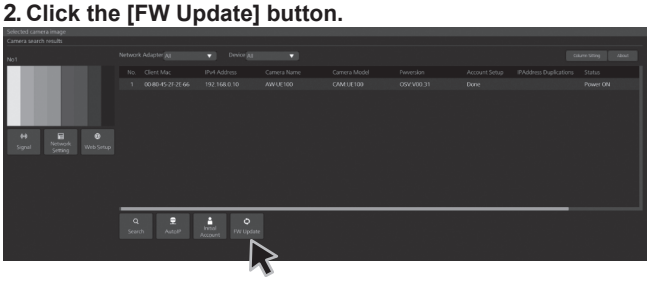

3. From the displayed list, select the terminal for which you want to update the firmware, then press the [OK] button.

■ Registering user accounts

1. Start the Easy IP Setup Software Version.2.

2. Click the [Initial Account] button.

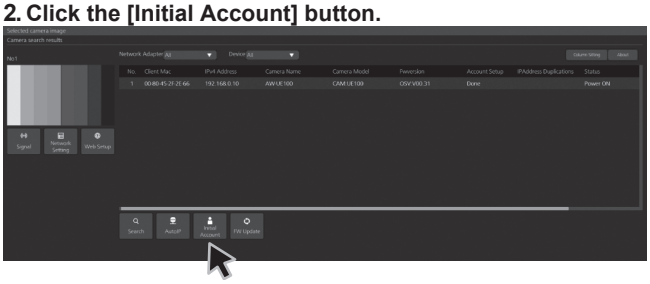

3. Select the camera for which you want to register a user, enter the account name and password, and then press the [OK] button.

■ Selecting the network interface

1. Start the Easy IP Setup Software Version.2.

2. From the Network Adaptor pull-down menu, select the network adaptor that will detect the camera.

Setting the initial account

1. Set the initial account.

In the initial state, the initial account setting screen is displayed when the web screen is displayed.
Set a user name and password. (Operating Instructions (PDF) → “Displaying the web screen” → “Displaying the web screen using a personal computer”)

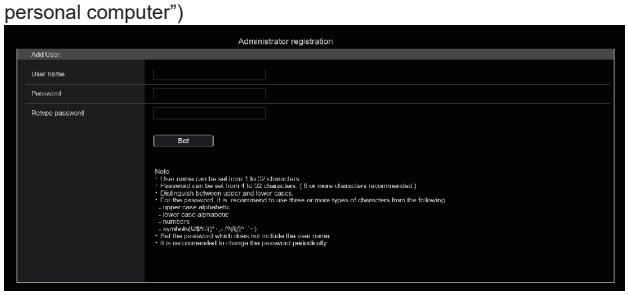

<NOTE>

- Do not set character strings that can be easily guessed by third parties.
- Change the password at regular intervals.
- The password must use at least 3 of the following 4 character types and be 8 characters or longer.
  Alphabet upper cases
  Alphabet lower cases
  Numerals
  Symbols (! # $ % ’ ( ) + , - . / = ? @ [ ] ^ _ ’ { } ~)
- When a password is set that does not adhere to the above policy, take responsibility for use of the device with due consideration for the security risks in the installation environment, etc.
- A warning is displayed if the set password goes against the recommended setting policy. When changing the password, click the [Back] button and set the password again.
  When continuing with the setting with full understanding of the security risks, click [Continue] to complete the setting.
- If you forget the account information that was set, use the switches for initialization of service switches to reset the user information used for connecting to the network. (→ page 37)

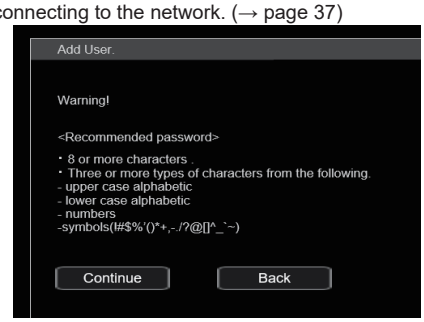

2. Completing registration of the initial account

After completing registration of the initial account, the following registration completed screen is displayed.
The live screen [Live] is automatically displayed after about 10 seconds elapse after the completed screen is displayed.
If the live screen [Live] is not displayed after 10 seconds elapse, manually move to the live screen [Live] by clicking the “please click here” link.

This completes the process of registering the initial account.

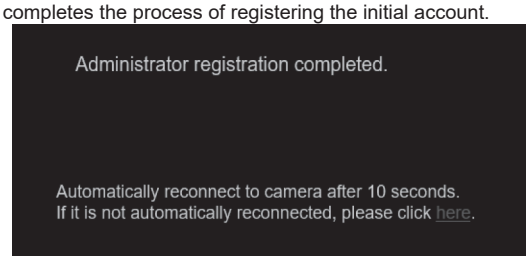

<NOTE>

- Network connection with AW-RP150 or AW-RP60 requires setup of an initial account.
  When an initial account is not set up, AW-RP150 or AW-RP60 can detect but cannot control this unit.

Installing the plug-in viewer software

To view IP images from the unit on Windows Internet Explorer 11, the "Network Camera View 4S" plug-in viewer software (ActiveX®) must be installed.
The plug-in viewer software can be installed directly from the unit.

<NOTE>

- [Automatic installation of viewer software] is set to [On] at the time of purchase, allowing you to install directly from the unit. If a message appears in the web browser's information bar, see page 60.
- When you display the Live screen [Live] on the personal computer for the first time, the installation screen for the plug-in viewer software (ActiveX) appears. Follow the instructions on the screen to perform installation. (only when using Windows Internet Explorer 11)
- If the plug-in viewer software (ActiveX) installation screen continues to appear when switching screens, even after it is installed, restart the personal computer.
- A license is required for the plug-in viewer software for each personal computer on which it is installed. You can view the number of times the plug-in viewer software was automatically installed in the Operating Instructions (PDF) → “Web screen configurations” → “Maintenance screen [Maintenance]” → “Product information screen [Product info.]”. For details on licenses, consult your local dealer.
- To uninstall the plug-in viewer software, select [Control Panel] - [Programs] - [Uninstall a program] in Windows, and remove "Network Camera View 4S".

How to turn the power on and off

Turning the power on

When performing operations from a wireless remote control

1. Set all the power switches of the units and devices connected in the system to ON.
- This unit does not have a power switch.
  When power is supplied to it, the status display lamp will light orange, and the unit is set to the Standby mode.

<NOTE>
- Under factory default conditions, the unit will be in Standby mode when power is supplied for the first time. (Status display lamp: Lit orange)
- When the power supply is cut off while the unit is in Standby mode, the unit will be in Standby mode the next time power is supplied. (Status display lamp: Lit orange)
- When the power supply is cut off while the unit is in Power ON mode, the unit will be in Power ON mode the next time power is supplied. (Status display lamp: Lit green)

2. Press one of the <CAM1> to <CAM4> buttons on the wireless remote control to select the unit.

3. Press the <ON/STANDBY> button on the wireless remote control for about 2 seconds.
The Power ON mode is established, images are output, and control can be exercised.
- The unit's status display lamp now lights up green.

<NOTE>
- It takes maximum 30 seconds per unit for the initial settings operation to be completed. During this period, the unit cannot be operated.
  (Status display lamp: Lit orange)

4. If a multiple number of units are going to be used, repeat steps 2 and 3 as required.

The unit's status display lamp blinks green when a signal matched by the remote control ID has been received, and it blinks orange when a signal that is not matched by the remote control ID has been received.

<NOTE>
- When operation is transferred to the Standby mode:
  The current zoom, focus and iris positions are stored in the memory (Power ON preset).
- When operation is transferred to the Power ON mode:
  The zoom, focus and iris are adjusted to the positions which were stored in the memory (Power ON preset) when operation was transferred to the Standby mode.

When performing operations from a controller

When using an AW-RP150 or AW-RP60
For details, refer to the operating instructions for the controller.

When using a commercially available controller
For details, refer to the operating instructions for the controller.

Turning the power off

When performing operations from a wireless remote control

1. Press one of the <CAM1> to <CAM4> buttons on the wireless remote control to select the unit.

2. Press the <ON/STANDBY> button on the wireless remote control for about 2 seconds.
The unit enters Standby mode.
- The unit's status display lamp now lights up orange.

3. If a multiple number of units are going to be used, repeat steps 1 and 2 as required.

4. Set all the power switches of the units and devices connected in the system to OFF.
- This unit does not have a power switch.

<NOTE>
- When operation is transferred to the Standby mode:
  The current zoom, focus and iris positions are stored in the memory (Power ON preset).
- When operation is transferred to the Power ON mode:
  The zoom, focus and iris are adjusted to the positions which were stored in the memory (Power ON preset) when operation was transferred to the Standby mode.

When performing operations from a controller

When using an AW-RP150 or AW-RP60
For details, refer to the operating instructions for the controller.

When using a commercially available controller
For details, refer to the operating instructions for the controller.

Troubleshooting

■ Operation

Symptom	Cause and solution	Reference pages
No power	• **Is the AC adaptor securely connected to the AC outlet?**	– – –
	• **If the power plug of the AC adaptor connected properly?**	– – –
	• **Is the LAN cable connected securely to the LAN connector for IP control <LAN LINK/ACT>?**	page 36
	• **Is the network cable for the PoE++ (IEEE 802.3bt compliant) compatible power supply device and the unit connected properly?**	page 23
	• **Power may not be supplied if the total power limit is exceeded on power supply devices that allow connections to multiple PoE++ terminals.** → For details, refer to the operating instructions for the PoE++ power supply device.	– – –
	• **If the unit is connected to the controller, has it been connected properly?** → For details, refer to the operating instructions for the controller.	page 20
	• **When performing operations from a wireless remote control** → Also refer to the “Cannot operate using the wireless remote control” item.	– – –
Cannot operate (common to wireless remote control, controller)	• **Is the power on?** → If the unit’s status display lamp is off or lights up orange, it means that the unit’s power is not on.	page 51
	• **The safe mode function may have been activated.**	Operating Instructions (PDF) → “Safe mode”
	• **Have the limiter functions been set?**	Operating Instructions (PDF) → “Limiters” to “Setting/releasing the limiters”
	• **Has the unit you want to operate been selected properly?**	Operating Instructions (PDF) → “Selecting the units”
Cannot operate using the wireless remote control	• **Have the remote control’s batteries run down or have the batteries been installed with their polarities reversed?** → If the status display lamp does not blink even when the wireless remote control is operated near the wireless remote control signal light-sensing area, it means that the batteries have run down. Replace the batteries.	– – –
	• **Have the IR ID switches been set correctly?**	page 37, page 47
	• **Is there a fluorescent light or plasma monitor near the unit and, if so, is the wireless remote control signal light-sensing area exposed to its light?**	page 34
Cannot operate using the controller	• **Is the unit connected to the controller properly?** → For details, refer to the operating instructions for the controller.	page 20
	• **It may be necessary to upgrade the version of the controller so that the controller will support the unit.** → For details on upgrading, visit the support page on the following website. https://pro-av.panasonic.net/en/	– – –
The unit turns in the opposite direction to the one operated	• **Has the stand-alone (Desktop) installation setting been selected correctly?**	Operating Instructions (PDF) → “Camera menu items” → “Pan/Tilt 1/2 screen” → “Install Position” Operating Instructions (PDF) → “Web screen configurations” → “Basic screen [Basic]” → “System screen [System]” → “Pan/Tilt” → “Install Position”
	• **The reversal setting may have been established at the controller if the unit is connected to the controller.** → For details, refer to the operating instructions for the controller.	– – –

Troubleshooting (continued)

Symptom	Cause and solution	Reference pages
Cannot access from a web browser	• **Has a LAN cable of category 5e or above been connected to the LAN connector for IP control <LAN LINK/ACT>?**	pages 21 to 23
	• **Is the [LINK] LED of the LAN connector for IP control lit?** → If it is not lit, it means that something is wrong with the connection to the LAN or that the network at the connection destination is not working properly. Check the LAN cable for defective contacts, and check the wiring.	pages 21 to 23
	• **Is the power on?** → If the unit's status display lamp is off or lights up orange, it means that the unit's power is not on.	page 51
	• **Has a valid IP address been set in the unit?**	Operating Instructions (PDF) → "Web screen configurations" → "User management screen [User mng.]" → "Host authentication screen [Host auth.]" → "Add host" → "IP address"
	• **Has the wrong IP address been accessed?** → Check the connections by following the steps below. **For Windows:** Using the Windows command prompt, execute > ping [IP address which has been set in the camera] A reply returned from the unit signifies that there are no problems in operation. If a reply is not received, try following operation: • Reboot the unit, and within 20 minutes change the IP address using the Easy IP Setup Software. **For Mac:** Using the macOS terminal, execute > ping -c 10 [IP address which has been set in the camera] A reply returned from the unit signifies that there are no problems in operation.	– – –
	• **Are you accessing via "http://" while the HTTPS function is enabled?** → Perform access via "https://" when using the HTTPS function. Entry of the port number is also required.	Operating Instructions (PDF) → "Web screen configurations" → "Network setup screen [Network]" → "Setting the Connection Method"
	• **Is the same IP address setting being used by another unit?** → Check out the IP addresses of the unit, access devices (personal computer, controller, etc.) and any other cameras.	Operating Instructions (PDF) → "Camera menu items" → "IP Network screen" → "IP Address"
	• **Does the subnet mask setting match the network subnet of the connection destination?** → Check out the subnet mask settings of the unit and access devices, and then consult with the network administrator.	Operating Instructions (PDF) → "Camera menu items" → "IP Network screen" → "Subnet Mask"
	• **Has the "Use a proxy server" setting been selected by the web browser? (When the unit and the personal computer are connected to the same subnet)** → If a proxy server has been set using the [proxy setting] of the web browser, it is recommended that a "Don't use proxy" address be selected as the unit's IP address setting.	– – –
	• **Has the wrong default gateway been set for the unit? (When the unit and personal computer are connected to different subnets)** → Check out the default gateway that has been set for the unit, and then consult with the network administrator.	Operating Instructions (PDF) → "Camera menu items" → "IP Network screen" → "Default Gateway"

Troubleshooting (continued)

Symptom	Cause and solution	Reference pages
The settings on the web setting screen [Setup] are not updated or displayed properly	**For Windows:** • **Press the [F5] key on the keyboard of the personal computer to request that the settings be acquired.** **For Mac:** • **Press the [Command] + [R] key on the personal computer's keyboard to request that the settings be acquired.**	– – –
	• **Perform the following to delete the temporary Internet files.** **For Windows:** ① Select [Tools] - [Internet Options] in Internet Explorer. ② Click the [General] tab, and click the [Delete] button under [Browsing history]. ③ In the [Delete Browsing History] dialog box, select the [Temporary Internet files and website files] checkbox, and then click [Delete]. ④ Click the [OK] button. **For Mac:** ① Select [Develop] - [Empty Cache] in Safari. ② Click [Empty] in the [Are you sure you want to empty the cache?] pop-up screen.	– – –
	For Windows: • **If [Check for newer versions of stored pages] is not set to [Every time I visit the webpage] in the temporary Internet file settings, the web setup screen may not appear.** → Perform the following. ① Select [Tools] - [Internet Options] in Internet Explorer. ② Click the [General] tab, and click the [Settings] button under [Browsing history]. ③ In the [Temporary Internet Files] dialog box, select the [Every time I visit the webpage] option under [Check for newer versions of stored pages]. ④ Click the [OK] button.	– – –
	• **The unit's ports may be filtered by the firewall or other function of the anti-virus software.** → Change the HTTP port number of the unit to a port number that will not be filtered.	– – –
It is not possible to download the setting files	**For Windows:** • **Has the file download function been disabled?** → Perform the following. ① Select [Tools] - [Internet Options] in Internet Explorer. ② Click the [Security] tab, and click the [Custom level] button under [Security level for this zone]. ③ In the [Security Settings] dialog box, select the [Enable] option for [File download]. ④ Click the [OK] button. ⑤ Click the [OK] button.	– – –
The tally lamps do not light	• **Is the [Tally] setting set to [Disable]?** → If [Tally] is set to [Disable], the unit's tally lamp does not light. Change the setting to [Enable].	Operating Instructions (PDF) → "Camera menu items" → "Output 5/5 screen" → "Tally" Operating Instructions (PDF) → "Web screen configurations" → "Basic screen [Basic]" → "System screen [System]" → "Output" → "Tally"

Troubleshooting (continued)

Symptom	Cause and solution	Reference pages
Status display lamp does not light	• **Is the [Status Lamp] setting set to [Disable]?** → If [Status Lamp] is set to [Disable], the status display lamp does not light when this unit is working properly. Change the setting to [Enable].	Operating Instructions (PDF) → “Camera menu items” → “Output 5/5 screen” → “Status Lamp” Operating Instructions (PDF) → “Web screen configurations” → “Basic screen [Basic]” → “System screen [System]” → “Output” → “Status Lamp”
The authentication screen appears repeatedly	• **Has the user name or password been changed?** → If you change the user name and password of the user currently logged in from a separate web browser while the unit is being accessed, the authentication screen appears each time the screen display is changed. Close the web browser, and initiate access to the unit again.	Operating Instructions (PDF) → “Web screen configurations” → “User management screen [User mng.]” → “User authentication screen [User auth.]” → “Add user” → “User name” “Password” “Retype password”
	• **Has the method for user authentication been changed?** → If you change the [User auth.] - [Authentication] setting, close the web browser and initiate access again.	Operating Instructions (PDF) → “Web screen configurations” → “User management screen [User mng.]” → “User authentication screen [User auth.]” → “Mode” → “Authentication”
Screens displays take a while to appear	• **Is access being performed in HTTPS mode?** **Screen displays may take a while to appear in HTTPS mode due to signal processing.**	– – –
	• **Is the unit on the same local network and being accessed via proxy?** → Configure the web browser settings so that access is not performed via proxy.	– – –
	• **Are multiple users accessing the unit's IP images at the same time?** → When multiple users access the unit's IP images at the same time, images may take some time to appear, and the frame rate of the IP images may drop.	– – –

Troubleshooting (continued)

■ Video

Symptom	Cause and solution	Reference pages
No pictures are displayed or the pictures are disturbed	• **Has the unit been connected properly to the other connected devices?**	pages 19 to 23
	• **If the system is configured in such a way that the picture is also switched when the unit to be operated is selected, has the correct unit been selected?**	Operating Instructions (PDF) → “Selecting the units”
	• **Has the image signal setting been selected correctly?**	Operating Instructions (PDF) → “Camera menu items” → “System 1/2 screen” → “Format” Operating Instructions (PDF) → “Web screen configurations” → “Basic screen [Basic]” → “System screen [System]” → “Format”
	• **Are external sync signals that are supported by the video signal format which has been set being input?**	page 36
The picture is flipped vertically	• **Has the stand-alone (Desktop) installation setting been selected correctly?**	Operating Instructions (PDF) → “Camera menu items” → “Pan/Tilt 1/2 screen” → “Install Position” Operating Instructions (PDF) → “Web screen configurations” → “Basic screen [Basic]” → “System screen [System]” → “Pan/Tilt” → “Install Position”
Multiple color bands (color bars) are displayed	• **Switch to the camera picture.**	Operating Instructions (PDF) → “What to do when encountering problems in the basic shooting operations”
The menu screen is displayed	• **Exit the camera menu.**	Operating Instructions (PDF) → “Basic setup operations”
It is difficult to view the menu screens	• **Depending on the HDMI monitor you are using, you may experience one or more of the symptoms described below.** • The resolution of the characters in the camera menu displays changes as the background image changes. • Depending on the edge enhancement setting established for the monitor, white lines appear in front of the black shadows of the camera menus. • Depending on the edge enhancement setting established for the monitor, the background colors may be superimposed onto the white parts of the camera menus.	– – –
No auto focusing	• **Is the focus set to manual?** → Auto focusing is initiated as soon as the focus is set to auto.	Operating Instructions (PDF) → “What to do when encountering problems in the basic shooting operations”
	• **In some situations, it may be hard to focus at the auto setting.** → In cases like this, select the manual setting, and focus manually.	Operating Instructions (PDF) → “Manual shooting” → “Manually adjusting the focus”
The subject is not brought into focus during zooming when the manual setting is used for the focus	• **Was the focus adjusted at the Tele end?** → First adjust the focus at the Tele end where the focusing accuracy is higher, and then proceed with the zooming.	– – –
	• **Under some operating conditions, it may be hard to bring subjects into focus.** → In such cases, use the focus at the auto setting.	Operating Instructions (PDF) → “What to do when encountering problems in the basic shooting operations”
Focusing is not possible in night mode	• **Are you shooting with visible light?** → The focus position is different due to the difference in refractive index between visible light and infrared light. Wavelengths near 850 nm are assumed for infrared light in night mode on this unit. Perform manual adjustment if necessary.	Operating Instructions (PDF) → “Manual shooting” → “Manually adjusting the focus”
1080/29.97PsF images appear jerky	• **This is normal operation.** → In the PsF (Progressive segmented Frame) format, an identical image is captured to fields 1 and 2 in order to output the same image as progressive. Therefore, the image will appear slightly jerky.	– – –

Troubleshooting (continued)

Symptom	Cause and solution	Reference pages
1080/25PsF images appear jerky	• **This is normal operation.** → In the PsF (Progressive segmented Frame) format, an identical image is captured to fields 1 and 2 in order to output the same image as progressive. Therefore, the image will appear slightly jerky.	– – –
Something is wrong with the coloring of the pictures	• **Activate the ATW (Auto tracking white adjustment) function.**	Operating Instructions (PDF) → “White balance adjustment” → “Auto tracking white adjustment (ATW)”
	• **In some situations, the proper colors may not be reproduced using the ATW function.** → In cases like this, proceed with the white balance adjustment.	Operating Instructions (PDF) → “White balance adjustment”
The pictures are too light or too dark	• **Either select the auto setting for the iris or select the manual setting and adjust the iris manually.**	Operating Instructions (PDF) → “Manual shooting” → “Manually adjusting the iris”
	• **The pictures may be dark if the analog video signal cables are too long because this will cause signal attenuation.**	– – –
Images are in black and white	• **Is the unit in night mode?** → In night mode, output will be in black and white.	Operating Instructions (PDF) → “Camera menu items” → “Brightness 2/2 screen” → “Day/Night” Operating Instructions (PDF) → “Web screen configurations” → “Image screen [Image/Audio]” → “Image adjust screen [Image adjust]” → “Brightness” → “Day/Night”
Auto white balance adjustment (AWB) is not possible	• **Is the unit in night mode?** → Auto white balance adjustment (AWB) is not possible in night mode.	Operating Instructions (PDF) → “Camera menu items” → “Brightness 2/2 screen” → “Day/Night” Operating Instructions (PDF) → “Web screen configurations” → “Image screen [Image/Audio]” → “Image adjust screen [Image adjust]” → “Brightness” → “Day/Night”
The screen is too bright in night mode	• **The aperture is set to open in night mode to prevent video voyeurism. Adjust the brightness at the light source.**	Operating Instructions (PDF) → “Manual shooting” → “Manually adjusting the iris”
The iris does not operate in night mode.		
The subjects appear distorted	• **Since this camera uses an MOS imaging device, the pickup timing differs slightly at the top left and bottom right of the screen. This means that if a subject moves quickly across the front of the camera, it may appear slightly distorted. This is not a malfunction.**	– – –
When the flash is fired during shooting, only the top or bottom of the screen becomes lighter	• **With a MOS imaging sensor, the pickup timing differs slightly at the top left and bottom right of the screen. This means that when the flash is fired, the bottom of the screen will become lighter in the field concerned and the top will become lighter in the next field.** **This is normal and not indicative of any problem.**	– – –
The brightness changes cyclically or the colors change, and horizontal stripes can be seen passing across the screen	• **These phenomena (flicker) may occur under the illumination produced by fluorescent lighting, mercury bulbs or other types of discharge tubes. In such cases, we recommend setting the electronic shutter speed to 1/100 in regions with 50 Hz power supply frequency, and to OFF in regions with 60 Hz power supply frequency.**	– – –
When fine lines or cyclical patterns are shot, flickering is seen or coloring is added to them	• **This phenomenon occurs because the pixels are arranged systematically on each image sensor. It is noticeable when the spatial frequency of a subject and the pixel pitch are brought into proximity so change the camera angle or take other action.**	– – –
Noise occurs in the audio input	• **The following causes are possible.** - The camera, switching hub, or peripheral devices are not grounded. - Power lines are running nearby. - Equipment generating strong electric or magnetic fields (e.g., television and radio antennas, air conditioning motors, power transformers) are located nearby. If the problem cannot be resolved via movement of surrounding devices, use a microphone equipped with an amplifier, or connect an audio output with low output impedance.	page 28

Troubleshooting (continued)

■ IP images

Symptom	Cause and solution	Reference pages
Images are not displayed	**For Windows:** • **Is the plug-in viewer software installed?** → Install the plug-in viewer software.	page 50
	For Windows: • **If [Check for newer versions of stored pages] is not set to [Every time I visit the webpage] in the temporary Internet file settings, IP images may not appear in the live screen [Live].** → Perform the following. ① Select [Tools] - [Internet Options] in Internet Explorer. ② Click the [General] tab, and click the [Settings] button under [Browsing history]. ③ In the [Temporary Internet Files] dialog box, select the [Every time I visit the webpage] option under [Check for newer versions of stored pages]. ④ Click the [OK] button.	– – –
The images are blurry	• **Is the focus properly adjusted?** → Check the focus adjustment.	– – –
Images are not updated	• **The images may not be updated and other problems may occur depending on your web browser and its version.** • **The images may stop depending on the network congestion, the level of access to the unit, etc.** • **If the IP video settings of the unit were changed, the image display may stop temporarily.** → Check the level of access to the unit, and stop any unnecessary access. Afterward, check the following. **For Windows:** Press the [F5] key on the personal computer's keyboard to request that the settings be acquired. **For Mac:** Press the [Command] + [R] key on the personal computer's keyboard to request that the settings be acquired.	– – –
The images do not update or display properly	• **Perform the following to delete the temporary Internet files.** **For Windows:** ① Select [Tools] - [Internet Options] in Internet Explorer. ② Click the [General] tab, and click the [Delete] button under [Browsing history]. ③ In the [Delete Browsing History] dialog box, select the [Temporary Internet files and website files] checkbox, and then click [Delete]. ④ Click the [OK] button. **For Mac:** ① Select [Develop] - [Empty Cache] in Safari. ② Click [Empty] in the [Are you sure you want to empty the cache?] pop-up screen.	– – –
	• **The unit's ports may be filtered by the firewall or other function of the anti-virus software.** → Change the HTTP port number of the unit to a port number that will not be filtered.	– – –

Troubleshooting (continued)

Symptom	Cause and solution	Reference pages
H.264 images are not displayed	• **If the "Network Camera View 4S" plug-in viewer software is deleted in an environment where the "Network Camera View 3" plug-in viewer software is installed, display of H.264 images will become impossible. In such cases, delete "Network Camera View 3" before installing "Network Camera View 4S".**	– – –
	• **Has the camera been connected to a personal computer via a router (via the Internet, for example)?** → If UDP port transfer has not been set correctly, H.264 images cannot be displayed. H.264 can be transferred by HTTP when [Internet mode(Over HTTP)] is set to [On]. • **Has UDP communication been blocked by security software or a firewall?** → If [Internet mode(Over HTTP)] is [Off], H.264 is transferred by UDP. → Change the settings in the security software and firewall, and change the settings to permit communications with your web browser.	Operating Instructions (PDF) → "Web screen configurations" → "Image screen [Image/Audio]" → "IP video settings screen [Video over IP]" → "H.264" → "Internet mode(Over HTTP)"
The images are distorted	• **The images may be distorted if the transmission path is congested and proper transmission is not possible.** → Consult your network administrator.	– – –
	• **The images may be distorted if video packet shuffling occurs on the transmission path.** → Switching to an identical Internet service provider for both the camera and the personal computer may prevent this problem. Consult your network administrator.	– – –
When multiple web browsers are running to display H.264 images, images from multiple cameras appear sequentially in a single web browser	**For Windows:** • **This may occur depending on the combination of the personal computer's display adaptor and the driver.** → If this occurs, update the first display adaptor to the latest version. If this does not resolve the problem, adjust the hardware accelerator function as follows. This section describes the procedure for Windows 10 as an example. Changing the settings may not be possible, depending on your environment. ① Right-click on the desktop, and select [Display settings] from the menu. ② Click [Advanced display settings]. ③ Select the [Troubleshooting] tab, and click [Change Settings]. ④ Change to [Hardware acceleration] setting to [disable] at the far left, and click [OK].	– – –
Audio is not output for NDI|HX-compatible switchers	• **[Audio] may be set to [Off] in the [Audio] audio setting screen.** → Reset the setting to [On].	Operating Instructions (PDF) → "Web screen configurations" → "Image screen [Image/Audio]" → "Audio setting screen [Audio]" → "Audio" → "Audio"
Images stop in applications that support High bandwidth NDI	• **When a personal computer and this unit are connected via a commercially available USB LAN conversion adaptor, the images may stop due to network problems on the personal computer side.** → If this phenomena occurs, firstly disable the network adaptor that is connecting the personal computer to this unit, then change [Streaming mode] in [Video over IP] to [H.264]. After this, re-enable the network adaptor that you disabled and the images will be output when you change the [Streaming mode] to [High bandwidth NDI].	Operating Instructions (PDF) → "Web screen configurations" → "Image screen [Image/Audio]" → "IP video settings screen [Video over IP]" → "Streaming mode"

Troubleshooting (continued)

■ Web screen

Depending on the OS installed on the personal computer, the following may occur. Follow the instructions below when the following has occurred.
Performing the following solutions will not affect the operation of other applications.

For Windows:

The “information bar” described in the following explanations refers to the message bars that appear in Internet Explorer 11.
The information bar appears at the bottom of Internet Explorer.

Symptom	Cause and solution	Reference pages
The following message appears in the information bar. "This website wants to run the following add-on: 'WebVideo Module' from 'Panasonic System Networks Co., Ltd.'."	• **Select [Allow].**	– – –
The following message appears in the information bar. "This website wants to install the following add-on: 'nwcv4SSetup.exe' from 'Panasonic System Networks Co., Ltd.'."	• **Select [Install]. When the security warning window appears, click the [Install] button.**	– – –
An unnecessary status bar or scroll bar is displayed on the pop-up window	• **Open the security settings screen for Internet Explorer, and select [Internet]. Click the [Custom level] button, set [Allow script-initiated windows without size or position constraints] to [Enable] under [Miscellaneous], and click the [OK] button. When the warning window appears, click the [Yes] button.**	– – –
The IP images do not match the display frames	• **Images may not appear correctly if their DPI settings are 120 DPI or higher.** → Right-click on the desktop of the personal computer, click [Display settings] - [Change the size of text, apps, and other items], and select [100% (Recommended)].	– – –
	• **Images may not appear correctly if the magnification level of Internet Explorer's zoom function is not set to 100%.** → Select [View] - [Zoom] in the menu bar of Internet Explorer, and click [100%].	– – –
The layout of the screen is distorted, or some buttons on the screen do not operate	• **Select [Tools] - [Compatibility View Settings] in the menu bar of Internet Explorer, disable compatibility view for the unit.**	– – –

Specifications

For details on specifications, visit the Panasonic website (https://pro-av.panasonic.net/manual/en/index.html) and refer to the Operating Instructions.

Power requirements:
12 V DC ⎓ (10.8 V to 13.2 V) (Supplied AC adaptor)
42 V to 57 V DC ⎓ (PoE++ power supply)
Current consumption:
3.0 A (Supplied AC adaptor)
1.0 A (PoE++ power supply)

indicates safety information.

■ GENERAL

Ambient operating temperature:
0 °C to 40 °C (32 °F to 104 °F)

Storage temperature:
–20 °C to 50 °C (–4 °F to 122 °F)

Ambient operating humidity:
20% to 90% (no condensation)

Mass: Approx. 2.2 kg (4.84 lb) (excluding cable cover, mount bracket)
Approx. 2.3 kg (5.06 lb) (including cable cover, excluding mount bracket)

Dimensions (W × H × D):
169.2 mm×204.6 mm×170.6 mm
(6-21/32 inches × 8-1/16 inches × 6-23/32 inches)
(excluding protrusions, cable cover, mount bracket)

Index

Numerics

3G SDI ACTIVE THRU OUT 20
3G SDI OUT connector 37
12G SDI OUT connector 37

A

Accessories 31
AUDIO IN connector 36

C

Cable clamp 37
Camera head 35

D

DC IN connector 37
Direct ceiling mount bracket 8
Drop-prevention wire 9, 35

E

Easy IP Setup Software 48
External sync signal input format 36

G

G/L IN connector 36
Ground connector 37
Grounding 28

H

HDMI connector 37
Hole for securing the camera pedestal 35

I

Initial account 50
Install Position 7
IP video transmission output 39
IR ID switches 37, 47

L

LAN connector for IP control 36

M

Mount bracket 8
Mount bracket for installation surface 35

N

NDI|HX compatible switcher 19

O

Optional accessories 31
Output conditions for each video format 38

P

Pan head 35
Plug-in viewer software 50
Power 51
Power cable 31

R

Remote control IDs 47
RS-422 connector 36

S

Service switches 37
Status display lamp 35

T

Tally lamp 35
Tripod screw holes 37

V

Ventilation holes 35

W

Wireless remote control 34, 46, 47
Wireless remote control signal light-sensing area 35
WV-Q105A 8

Panasonic Entertainment & Communication Co., Ltd.
Web Site: https://pro-av.panasonic.net/en/

© Panasonic Entertainment & Communication Co., Ltd. 2020-2024