newline

Elara Pro Series

Interactive Flat Panel Display

User Manual

version 17062024

Welcome to the world of **NEWLINE**.

Thank you for choosing the **NEWLINE** Elara Pro Series Interactive Flat Panel Display. Please use this document to get the most out of your screen.

This device complies with part 15 of the FCC Rules. Operation is subject to the following two conditions:(1) This device may not cause harmful interference, and (2) this device must accept any interference received, including interference that may cause undesired operation.

NOTE 1: This equipment has been tested and found to comply with the limits for a Class B digital device, pursuant to part 15 of the FCC Rules. These limits are designed to provide reasonable protection against harmful interference in a residential installation. This equipment generates, uses and can radiate radio frequency energy and, if not installed and used in accordance with the instructions, may cause harmful interference to radio communications. However, there is no guarantee that interference will not occur in a particular installation. If this equipment does cause harmful interference to radio or television reception, which can be determined by turning the equipment off and on, the user is encouraged to try to correct the interference by one or more of the following measures:

- Reorient or relocate the receiving antenna.
- Increase the separation between the equipment and receiver.
- Connect the equipment into an outlet on a circuit different from that to which the receiver is connected.
- Consult the dealer or an experienced radio/TV technician for help.

NOTE 2: Any changes or modifications to this unit not expressly approved by the party responsible for compliance could void the user's authority to operate the equipment.

The symbol of the crossed out wheeled bin indicates this product should not be placed in municipal waste. Instead, dispose of waste equipment by handing it over to a designated collection point for the recycling of electrical and electronic equipment.

Symbol Conventions

Symbols are used in this document to indicate operations that need particular attention. The symbols are defined as follows:

NOTE	Provides additional information to supplement operation in the main text.
CAUTION	Indicates a potentially hazardous situation that, if not avoided, could result in equipment damage, data loss, performance deterioration, or unanticipated results.
WARNING	Indicates a hazard with risk that, if not avoided, could result in death or injury.

Safety Instruction

For your safety, please read the following instruction before you use the product. Serious injury or property damage may be caused by improper operations. Do not try to repair the product on your own.

WARNING	
	Disconnect the product from the power supply immediately if major failures occur. Major failures include the following: • If smoke, a peculiar smell or an abnormal sound is discharged from the product. • No image or sound is displayed, or the image error occurs. In the preceding scenarios, do not continue to use the product. Disconnect power supply immediately and contact professional staff for troubleshooting.
	Do not drop any liquids, metal or anything combustible onto the product. • If any liquid or metal are dropped onto or into the product, power off the product and disconnect the power supply, then contact professional staff for solutions. • Pay attention to children when they are close to the product.
	Put the product on a stable surface. An unstable surface includes, and is not limited to an inclined plane, a shaky stand, desk or platform, that might cause the product to turnover and be damaged.
	Do not open the panel or change the product on your own. High voltage components are installed in the product. When you open the panel, high voltage, electric shock, or other dangerous situations may occur. If inspection, adjustment, or maintenance is required, contact the local distributor for help.
	Use the provided power supply. • To prevent the product from being damaged, do not use any types of power cables other than the one provided with the product. • Use a three-wire socket and ensure that it is properly grounded. • Pull out the power plug from the socket if the product is not used for a long period.
	Clean the power plug regularly. • Fire or electric shock may be caused if the product is powered on, while you are cleaning. • Pull out the power plug before cleaning it with a dried cloth.
	Do not put items on the top of the product. • Do not put items, such as a container for liquid (a vase, flowerpot, cosmetics or liquid medicine) on the top of the product. • If any water or liquid is spilled on the product, the product may short circuit cause fire or electric shock. • Do not walk on or hang any items on the product.

WARNING	
	Do not install the product in an improper place. • Do not install the product in humid places, such as the bathroom, the shower room, near windows, or outdoor environments that experience rain, snow or other harsh weather. Avoid installation near hot spring vapor. The preceding environments may cause faults in the product or electric shock under extreme conditions. • Do not put an exposed fire source, such as a lit candle on the product.
	Pull out the power supply during thunderstorms. • Do not touch the product during a lighting storm, you may experience an electric shock. • Install or place components that supply high enough voltage to cause personal injury out of the reach of children.
	Do not touch the power cable with wet hands.

CAUTION	
	Do not install the product in high temperature environments. • Do not install the product near a heat source, such as a radiator, a heat reservoir, a stove or other heating products. • Do not expose the product to direct sunlight, which may cause high temperatures and subsequent faults in the product.
	When transporting the product: • Pack the product for transport or maintenance by using the cartons and cushioning material provided with the product. • Move the product vertically during transport. The screen or other components are easily broken if the product is moved in an improper way. • Before you move the product, disconnect all external connections and separate all topple preventing products. Move the product carefully to prevent it from being hit or squeezed, especially the screen, which may cause injury if broken.
	Do not cover or block up any vents on the product. • Any overheated components may cause fire, damage the product, and shorten the service life. • Do not lay the product down in a way where the venting surface will be covered. • Do not install the product on carpet or cloth. • Do not use a cloth such as table cloth to cover the product.
	Keep the product away from the radio. The product complies with the international EMI standard to prevent radio interference. However, interference may still exists and causes noise in the radio. If noise occurs in the radio, try the following solutions.

⚠ CAUTION

- Adjust the direction of the radio antenna to avoid the interference from the product.
- Keep the radio away from the product.

If the screen glass is broken or falls off.

- Keep all personnel 10 feet away from the screen to ensure safety.
- Do not perform any installation or disassembly while the screen glass is broken or has fallen off.

Use the battery correctly.

- Galvanic corrosion, electric leakage, and even fire may be caused by improper battery usage.
- It is recommended to use the designated type of battery and install the battery by the correct electrodes (positive and negative).
- Do not install and use a new battery with a used one.
- Take out the battery if the remote control is not used for a long period.
- Do not expose the battery to overheated environments, such as sunlight and or heat sources.
- Dispose of the used battery based on your local regulations.

Do not damage the power cable.

- Do not damage, change, twist, bend, or forcibly drag the power cable.
- Do not put weights (such as the product itself) on the power cable.
- Do not forcibly drag the cable when you pull out the power plug. If the power cable is damaged, please contact the local distributor to repair or replace it.
- The power cable in the accessory box is for this product only. Do not use it on other products.

Additional advice:

- Use the product in an environment with comfortable lighting. It is harmful to your eyes to watch in a too bright or too dark environment.
- Relax your eyes watching for a period of time.
- Keep sufficient distance from the product to protect your eyes and prevent eyestrain.
- Adjust the volume to an appropriate level, especially at night.
- Use amplifier equipment as the audio input source with caution. If you must use amplifier equipment, the input power should not exceed the maximum of speaker power. Otherwise, the speaker can become overpowered and damaged.

About USB port.

Front USB ports and rear USB 3.0/USB 2.0 ports switch connections based on signal sources. If the current signal source is reading the data from an external product connecting to the port, please switch the signal source after the data reading is complete. Otherwise, the data or product may be damaged.

1 Parts and Functions

1.1 Parts

- Front View

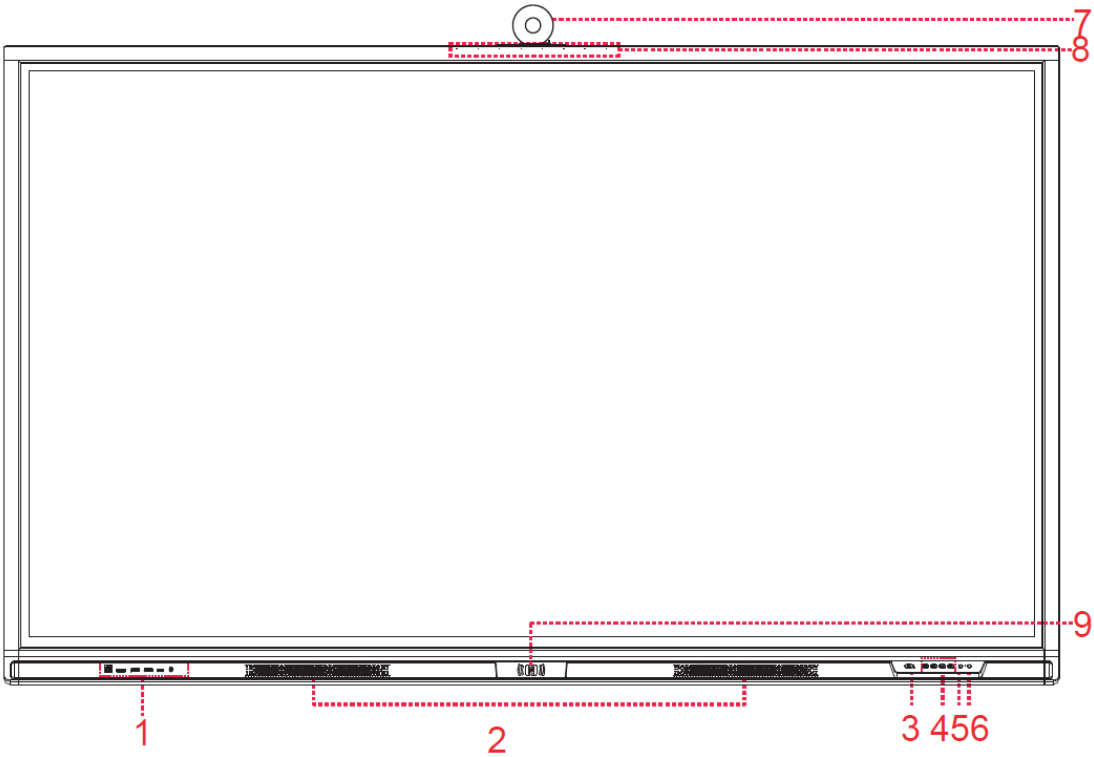

- Rear View

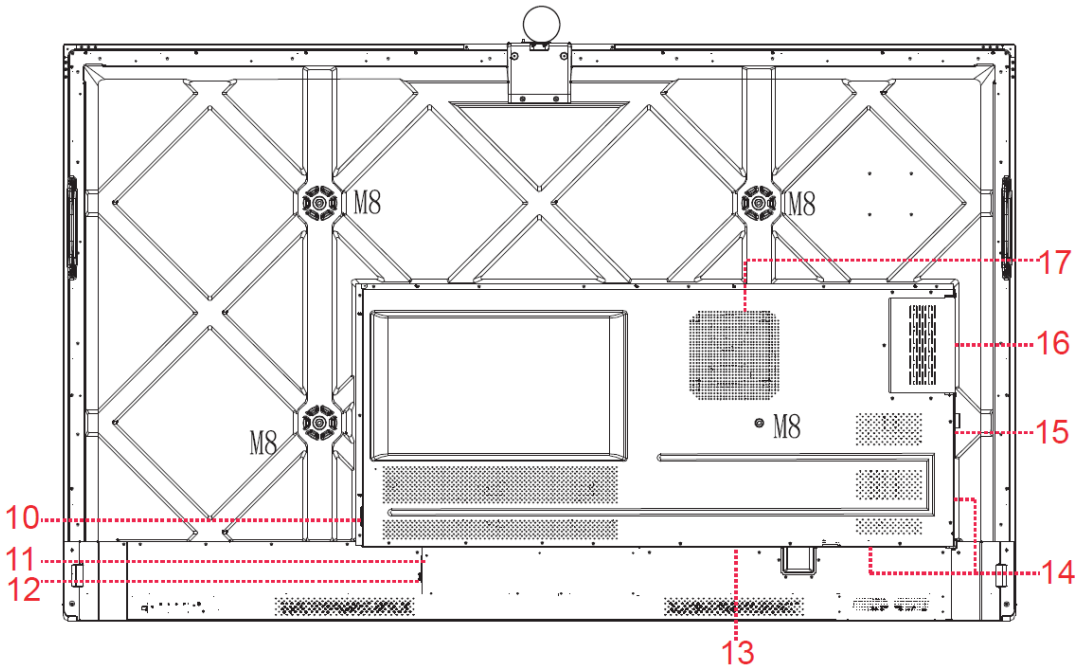

1	Front Ports	10	Power Output Plug
2	Speakers	11	Power Supply Plug
3	Power On/Off	12	Power Switch
4	Front Buttons	13	SDM-S Slot
5	Remote Control Receiver	14	Rear Ports
6	Light Sensor	15	Wi-Fi Module
7	Camera(Plug - in)	16	OPS Port
8	Microphone	17	Woofer
9	NFC Sensing Area		

Notes:

- SDM-S is Smart Display Module Small.
- The product images shown are for illustration purposes only and may not be an exact representation of the product.

1.2 Ports

CAUTION

- *Front USB ports and rear USB 3.0/USB 2.0 ports switch connections based on signal sources. If the current signal source is reading the data from an external product connecting to the port, please switch the signal source after the data reading is complete. Otherwise, the data or product may be damaged.*
- *For USB use, USB 2.0 provides up to 500mA whereas USB 3.0 provides up to 900mA of power. Please make sure the USB flash drive is formatted to FAT32 before inserting into the panel.*
- *Please use the supplied cable in the accessory box or the HDMI association certified shielded cable to better ensure the signal quality.*
- *While HDMI and Display Port offer support for cables of varying lengths, the maximum cable length that Newline recommends for optimal performance is 3 meters (10 feet) for HDMI and 1.8 meters (around 6 feet) for Display Port. Using cable longer than recommended length may cause data loss and a negative impact to display quality.*

WARNING

The rear power output port is supplies 180W (maximum) power. Please contact Newline to purchase the power AC adapter for powering external devices. Please do not connect any products which require power than listed. Doing so may cause injury or damage to the panel.

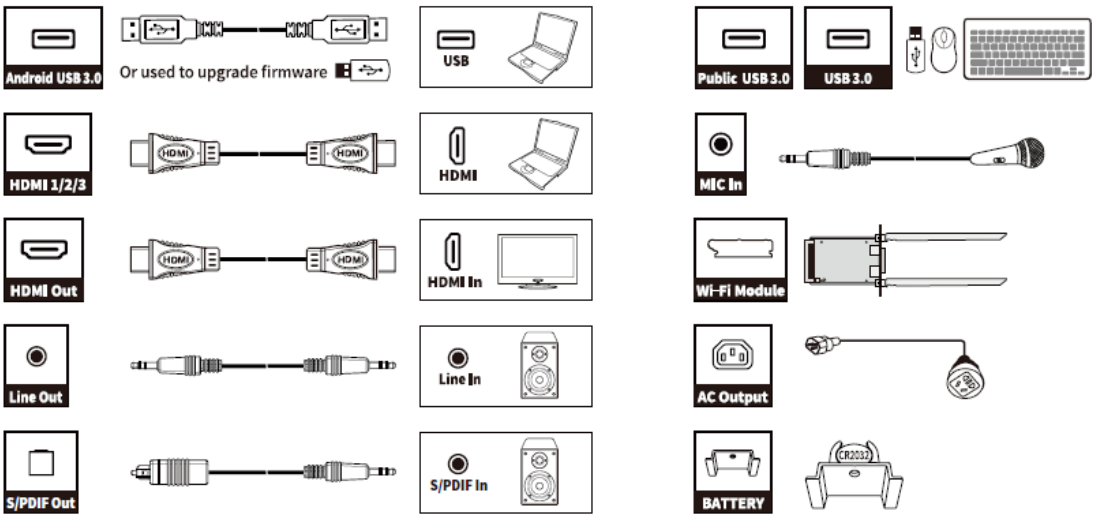

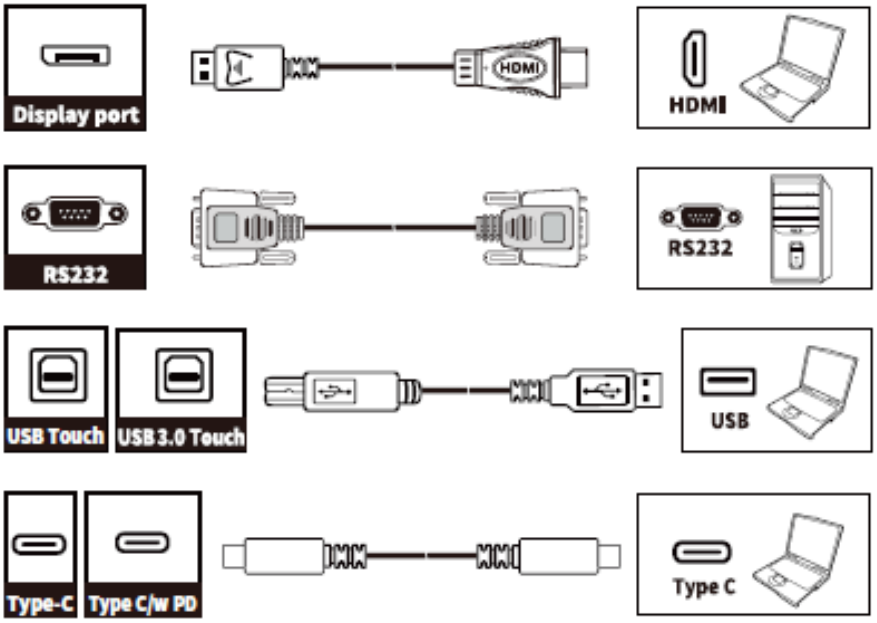

1.3 Front Buttons

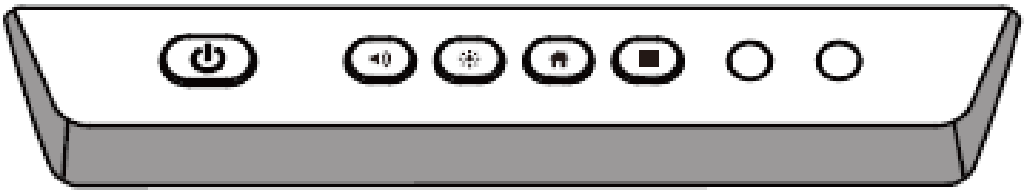

Buttons	Operations	Functions
⏻	Short press	Power on • Solid white color : Display is on and working
		Sleep mode • The red and white lights flicker alternately: Display enter Sleep mode.
	Long press for more than 2 seconds	Power off • Solid red color : Display is in shut down mode
🔊	Short press	Adjust the Volume
	Long press for 5 seconds	Enable or disable the touch function. Notes: When the touch function is disabled, the Android system, external sources and multi-user channels will be in no-touch mode. If you tap the screen, it will display “The touch function is locked!”.
☀	Short press	Adjust the Brightness

Buttons	Operations	Functions
	Short press	Go to the home page
	Short press	Open the Quick Setting menu
	Long press for 5 seconds	Activate/Exit the power button lock function

Notes:

- Press **Volume +** >**Volume +** >**Volume -** >**Volume -** > **Left** > **Left** > **Right** > **Right** buttons on the remote control to turn on/off the touch function.
- The power button on the front panel will be locked if you activate the power button lock. Long press button for 5 seconds to exit the lock.

1.4 Remote Control

CAUTION

Carefully read the following instructions before using the remote control to avoid possible faults:

- Do not drop or damage the remote control.
- Do not spill water or other liquids on the remote control.
- Do not place the remote control on a wet object.
- Do not place the remote control directly under sunlight or near a heat source.

Buttons	Operations
	Power On/Off
	Go to the Home Page
	Directional Pad
	Confirm/OK
	Press once to freeze the current screen. Press again to exit freeze function
	Enter the Source Selection Page
	Return to Previous/Exit
	App switcher
	• Open the Quick Setting menu on the embedded operating system. • Open the menu in Windows system.
	Take a Screenshot
	Press once to decrease the volume, long press to decrease the volume continuously
	Mute/Unmute Audio
	Press once to increase the volume, long press to increase the volume continuously

2 Installation Guide

2.1 Safety Precautions

Installation Environment

Installation Direction

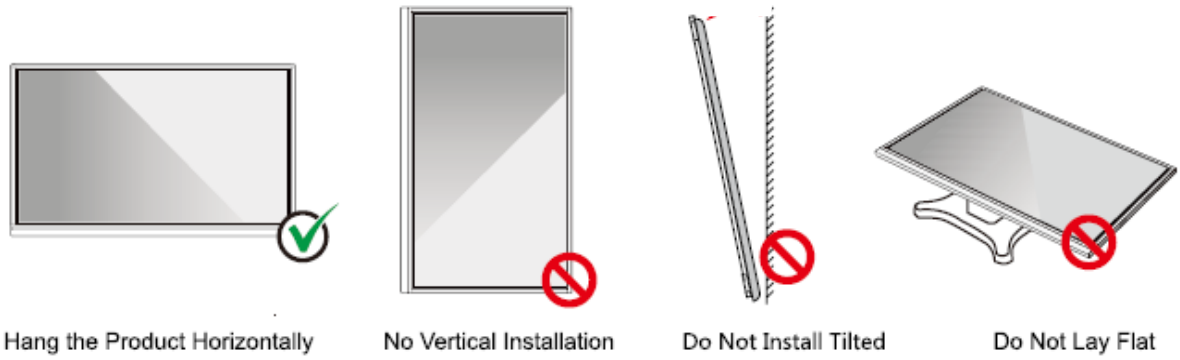

2.2 Installation Precautions

Weight Loading

Weight of the panel:

65 inch: 39 kg

75 inch: 52 kg

86 inch: 65 kg

When using a mobile stand, ensure that the weight of the product is less than the loading capacity of the mobile stand.

- When using the wall-mount bracket, ensure that the wall can support the weight of the product. We recommend that the wall surface be reinforced and have a loading capacity 4 times of the weight of the product. Consult a professional installer for wall-mount installation.

NOTE

The company does not undertake relevant legal responsibility for any problems caused by improper operation, if the third party mobile stand, or wall-mount bracket is beyond the scope of the product.

- Do not install the product where it might be hit by an opening or closing door.

Vertical installation

When installing the panel, try to keep the panel vertical. An excessive tilt angle may cause damage to the glass or other internal components.

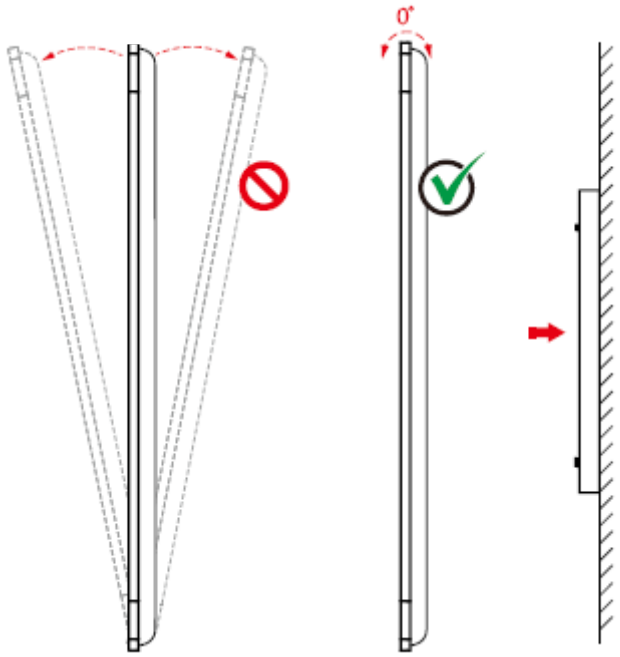

NOTE

For any problem, please contact our support desk. Our company is not responsible for any damage or losses incurred by users if the users fails to follow the instructions.

Ventilation

Ensure adequate ventilation and/or an air conditioned environment. We recommend keeping certain distances from the side of the product to the wall or panels. Ventilation requirements are shown in following figure.

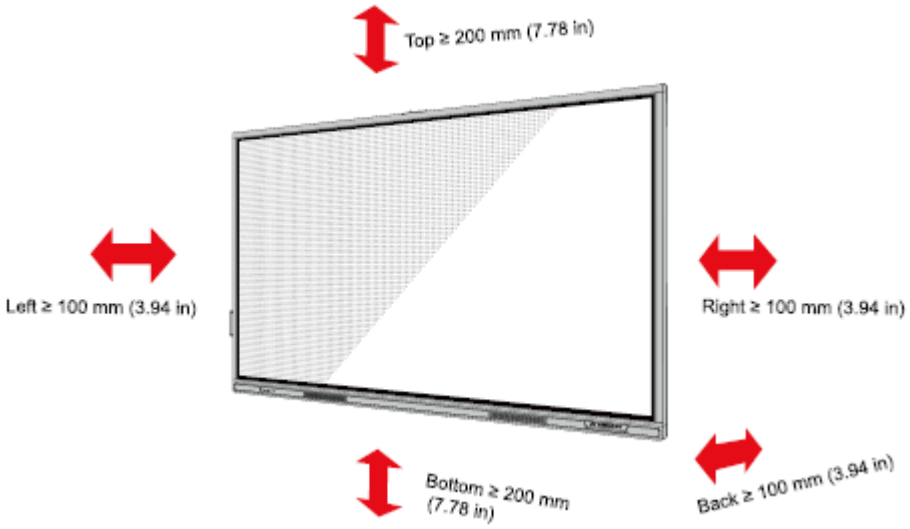

2.3 Installation

The dimensions of the four bracket mounting holes on the back panel are VESA MIS-F compliant (86INCH or 75INCH: 800 x 400 mm/31.50 x 15.75 in; 65INCH: 600 x 400 mm/23.62 x 15.75 in). Use metric M8 screws with a length of 10 mm to 15 mm (0.40 to 0.59 in) to secure the touch screen to the mounting system. Dimensions of the mounting holes on the back panel are shown on the following figure.

NOTE

Consult a professional installer to install the display product.

75"/86":

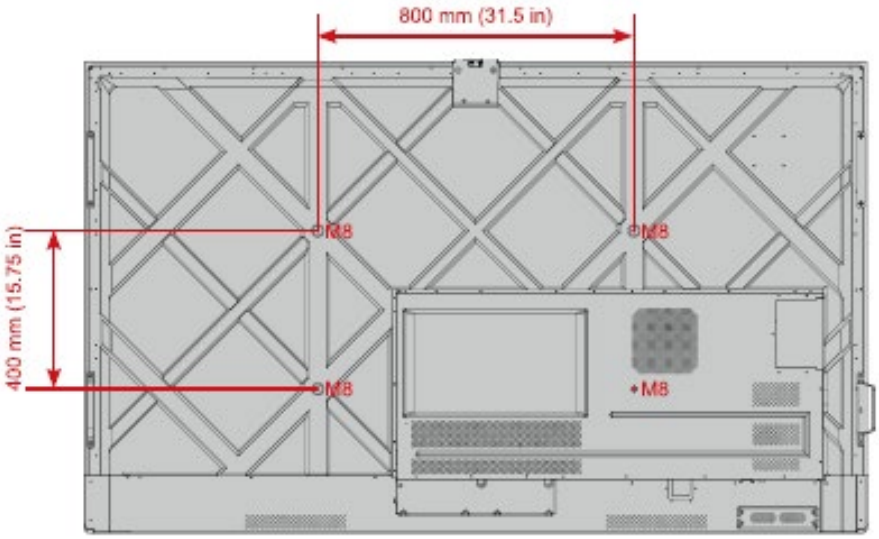

65":

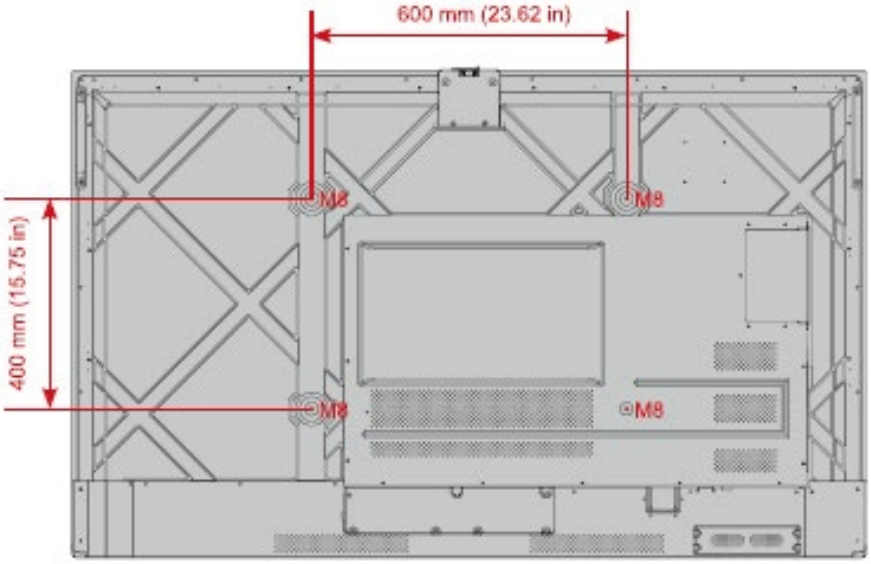

2.4 Installing the OPS (Optional)

CAUTION

The OPS does not support hot plugging. Therefore, you must insert or remove the OPS when the display is powered off. Otherwise, the display or OPS may be damaged.

You will need to purchase the OPS separately. Perform the following steps to install the OPS.

Step 1 Unscrew the M4 screws by hand to remove the OPS protective cover.

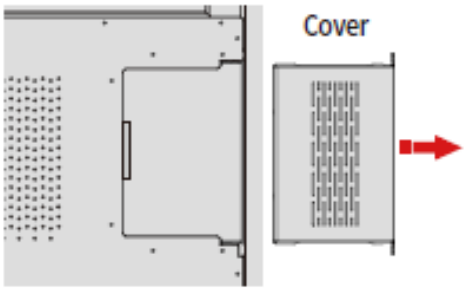

Step 2 Push the OPS into the OPS port on the rear of the panel until firmly seated, using the M4 screws to secure the OPS.

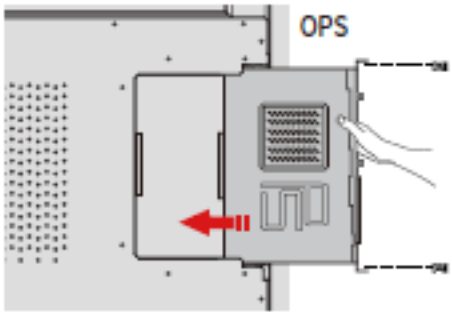

2.5 Installing the Wi-Fi Module

CAUTION

Wi-Fi Module *does not support hot plugging. Therefore, you must insert or remove the* Wi-Fi Module *when the display is powered off. Otherwise, the display or* Wi-Fi Module *may be damaged.*

Perform the following steps to install the Wi-Fi Module.

Step 1 Unscrew the 2 screws on the Wi-Fi Module port and remove the shielding cover.

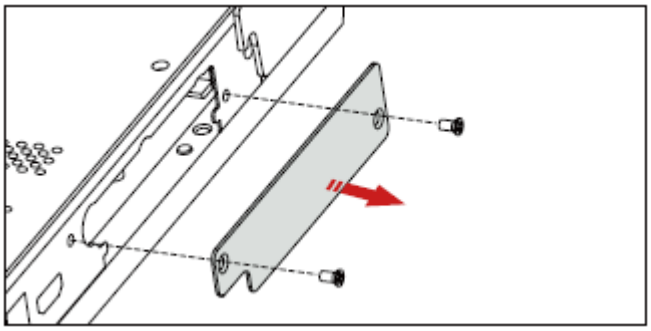

Step 2 Insert the Wi-Fi Module into the port on the rear of the panel until firmly seated, using the 2 screws to secure it.

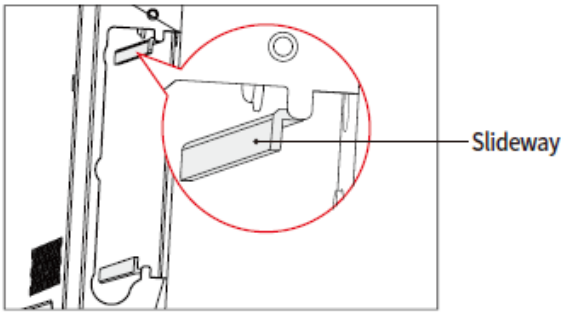

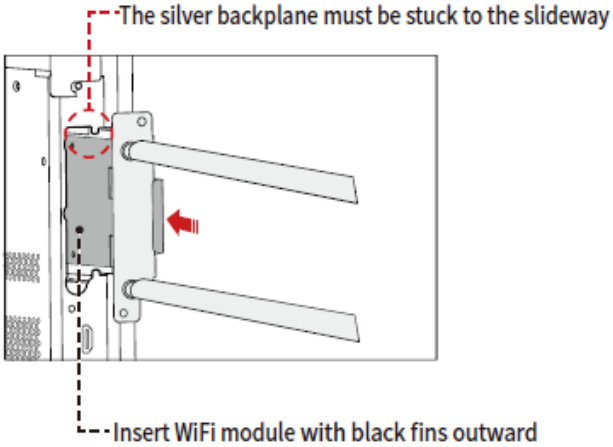

2.6 Installing the Camera

The camera is put in accessary box with an independent package, please install it onto panel referring to following steps. Use the two screws along with camera to fix.

Remove the silicone cover from the middle port on the top of the panel display, then insert the camera. Install 2 fixing screws for secure purpose.

Remove the front cover and start using.

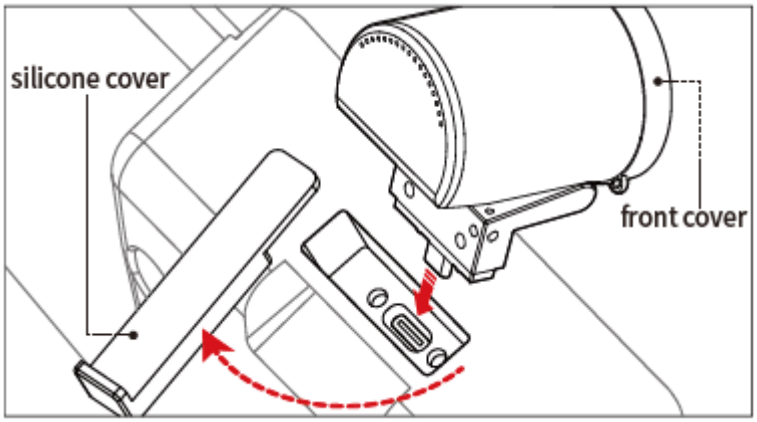

2.7 Installing the SDM-S (Not included)

CAUTION

The SDM-S does not support hot plugging. Therefore, you must insert or remove the SDM-S when the display is powered off. Otherwise, the display or SDM-S may be damaged.

Currently we don't provide SDM-S, but if you have a SDM-S to use, please install refering to the following steps.

Step 1 Unscrew the 2 screws on the SDM-S slot and remove the shielding cover.

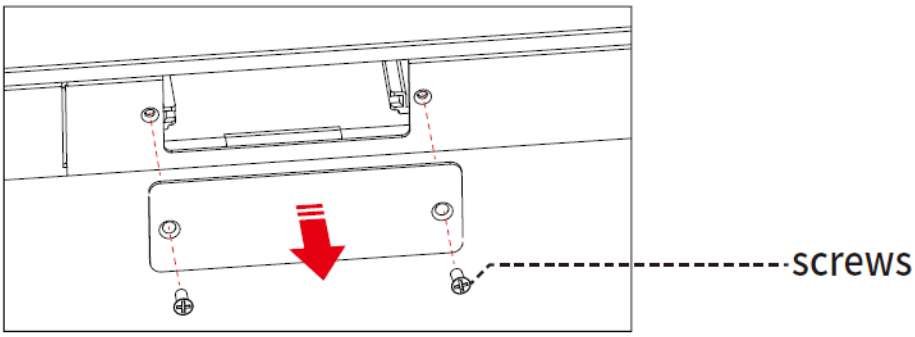

Step 2 Insert the SDM-S into the port on the rear of the panel until firmly seated, using the 2 screws to secure it.

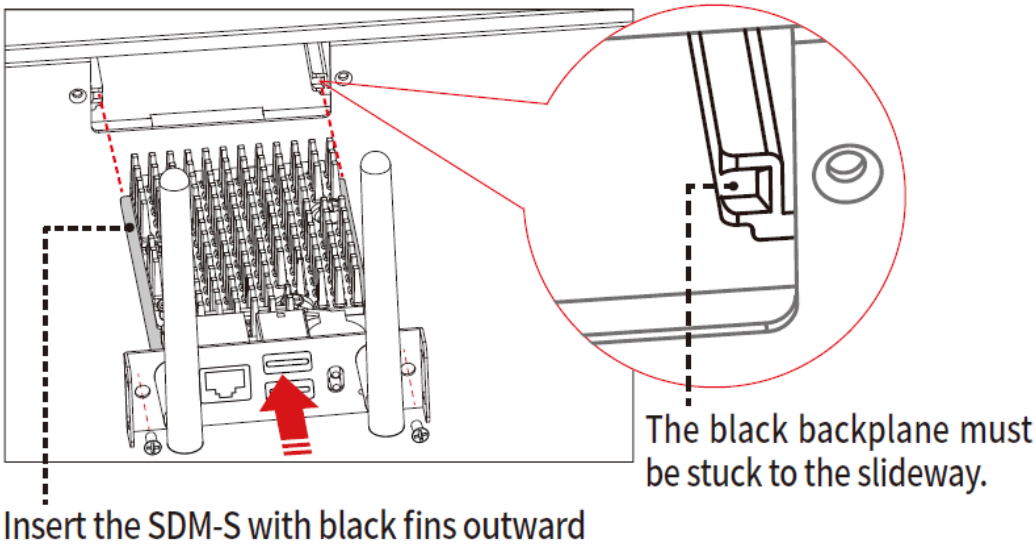

NOTE

Please install SDM-S first before you hang panel on the wall.

3 Power On/Off

3.1 Power On

Step 1 Ensure the power cable is fully seated into the panel and wall outlet before powering on the panel. Please confirm your wall outlet supports a power range of 100V to 240V with frequency at 50 Hz/60 Hz ± 5% and is fully grounded.

NOTE

The power outlet should be installed near the equipment and should be easily accessible.

Step 2 Flip the power switch located on the side of the product to "I".

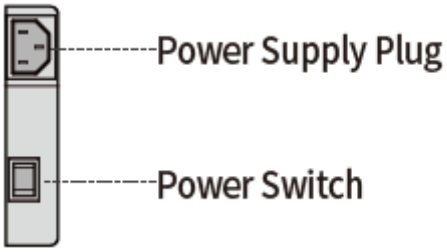

Step 3 Press the power button on the front control panel or on the remote control.

3.2 Power Off

Step 1 Press the power button on the front panel or the power button on the remote control to enter sleep mode.

Step 2 Long press the power button on the front panel or the power button on the remote control and a **prompt** dialog box will be displayed as shown in the following figure.

Step 3 Tap **OK** to turn off the display, and the power indicator will turn to red.

Step 4 If you want to completely turn off the panel, turn off the rocker switch behind the panel (next to the power socket) and unplug the power cord.

NOTE

- If an OPS is installed, the OPS and the screen will simultaneously powered off when the power is shutoff.
- Please properly shut down the panel before disconnecting the power source or it may cause damage. Accidental power failure may cause damage to the panel.
- Do not repeatedly turn the power on & off in a short period of time as it may cause malfunction.

4 More Information

Newline Assistant

Please visit our website (https://newline-interactive.com/eu/support/downloads/) and choose **Support** > **Downloads** to download the Newline Assistant installation package.

For More Information

Please visit our website (https://newline-interactive.com/eu/support/downloads/) and choose **Support** > **Downloads** to download **User Manual** for detailed instruction manual.

Contact Us for Support

Please email us at support_eu@newline-interactive.com.

National Service Hotline: +34 91 804 31 79
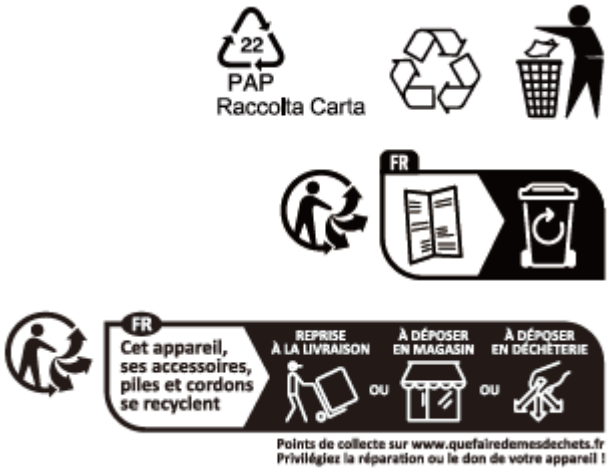
The company is committed to product updates and technical improvements. The technical parameters and specifications are subject to change without prior notice. The pictures in this manual are for reference only.