MAXHUB Speakerphone

Model: UC BM45

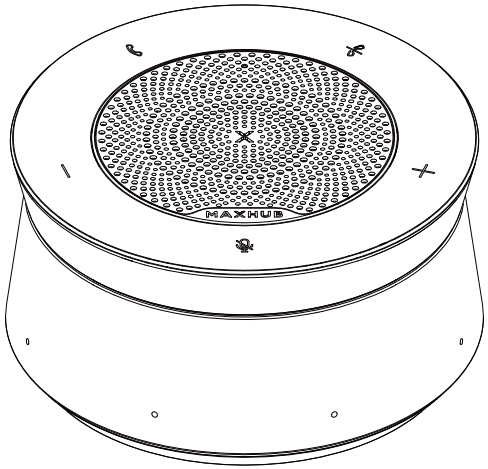

Quick Start Guide

V1.3

MAXHUB

MAXHUB

Table of Contents

I. Package Contents 05

II. Product Introduction 06

III. Connection 07

IV. Installation 10

V. Operation 12

VI. Maintenance 15

Thank you for choosing **MAXHUB** product.
To ensure that you are able to fully utilize the capabilities of the product, we ask that you please read this quick start guide carefully and thoroughly before using the device. Should you have any questions or require assistance, please do not hesitate to contact our technical support team for guidance.

Safety Information

- **Be careful of electric shock or fire**

(1) This device is not waterproof, please keep it dry; if water is immersed in this product, please shut down immediately and contact the customer service center according to the prompt provided by the customer service center before using it again.
(2) Never place this device and accessories near the burning flames or other heat sources, Including direct sunlight.
(3) This device should be turned off and unplugged before lightting storms.

- **Be careful of short circuit or catching fire**

(1) Before connecting this device to an electrical outlet, please make sure that the power supply voltage matches the voltage value printed on the back or bottom of the product. Never connect the product to an electrical outlet when the voltage is different.

- **Be careful of injury or damage this speaker**

(1) Never place this device or any objects on a power cord or other electronic devices.
(2) If this product is transported at a temperature below 5°C, please unpack the product and wait until the temperature reaches room temperature before connecting it to a power outlet.
(3) This product comes with sharp objects, please handle it carefully so as to avoid injury to the user or scratching the appearance of the product or damaging the internal parts of the product.

- **Be careful overheat**

(1) Never install this device in an enclosed space. Always leave at least 4 inches space around the product for ventilation.

- **Children's health**

(1) This device and accessories may contain some small parts, please keep them out of the reach of children to avoid danger.

- **Care for the product**

(1) Clean this device only with a piece of microfiber cleaning cloth.

- **Care for the environment**

(1) This device applies recyclable high-performance materials and components. Never dispose of this product with other household wastes. Please understand the local regulations on the sorting collection of electronic, electrical products and batteries.
(2) Proper disposal of these products helps to avoid potential negative effects on the environment and human body health.

- **Maintenance & servicing**

(1) Please contact professional service personnel for all repair services.
(2) Please do not insert any sharp object into the inside of the device.
(3) Please do not drop or hit the device to avoid damaging it.
(4) This device has a built-in lithium battery, please charge it regularly, otherwise the battery will not be able to continue to be charged and used if it is not charged for a long time.

- **More help**

For FAQs, technical support, software and user manual download, please visit: *www.maxhub.com*

I. Package Contents

Please check that the following items are included in the package:

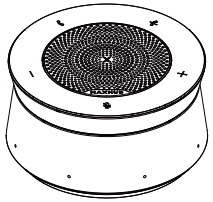

UC BM45 ×1

Table Bracket ×1

Screw ×2

USB-C to USB-A Cable ×1
(3 m / 9.8 ft)

Ethernet Cable ×1
(Cat5e, 3 m / 9.8 ft)

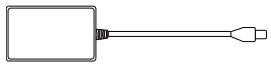

Power Adapter ×1

NOTE

1. This device supports connection to the Interactive Flat Panel and computers. To avoid damage or malfunction, please always use the power adapter provided in the package.
2. This device has built-in audio AI algorithms. To ensure optimal performance, please disable echo cancellation, automatic microphone volume adjustment, and noise reduction algorithms in the conferencing software.
3. The BM45 speakerphone has a pickup range of up to 8 meters, with best performance in 4 meters.
4. You can use Cat5e or Cat6a Ethernet cables, with a maximum length of 20 m (65.6 ft).

MAXHUB

II. Product Introduction

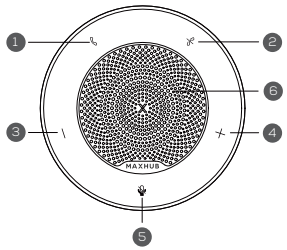

Top

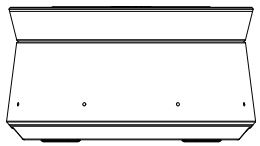

Front

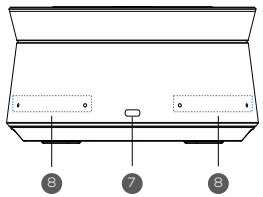

Rear

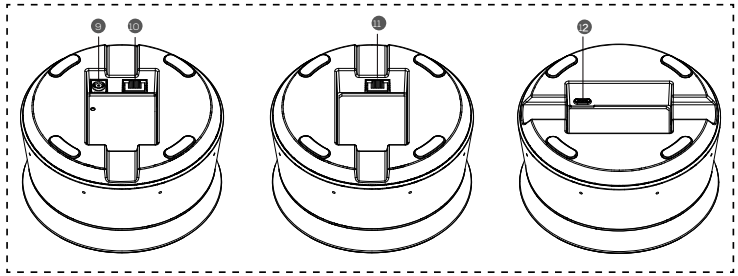

Bottom

No.	Item	No.	Item
1	Answer Button	7	Kensingston Lock Hole
2	Hang Up Button	8	Microphone
3	Volume Down Button	9	DC In
4	Volume Up Button	10	RJ45 Connector to Previous BM45
5	Mute Button	11	RJ45 Connector to Next BM45
6	Speaker	12	USB Type-C Interface

III. Connection

The following diagram shows how to connect the UC BM45 speakerphone to the PC and the Interactive Flat Panel. You need to connect all devices before installation.

Option 1: Connect to the PC (1 to 3 UC BM45 Speakerphones)

Step 1: Use a power cable to connect the first UC BM45 speakerphone to the power supply.

Step 2: Use an USB-A to USB-C cable to connect the first UC BM45 speakerphone to the room PC.

Step 3: Use Ethernet cables to connect the first UC BM45 speakerphone to the other UC BM45 speakerphones via the "Next device (RJ45 Out)" and "Previous device (RJ45 In)" ports. You can connect up to 3 UC BM45 speakerphones, with an ideal distance of 4.5 m (15 ft) between each speakerphone unit.

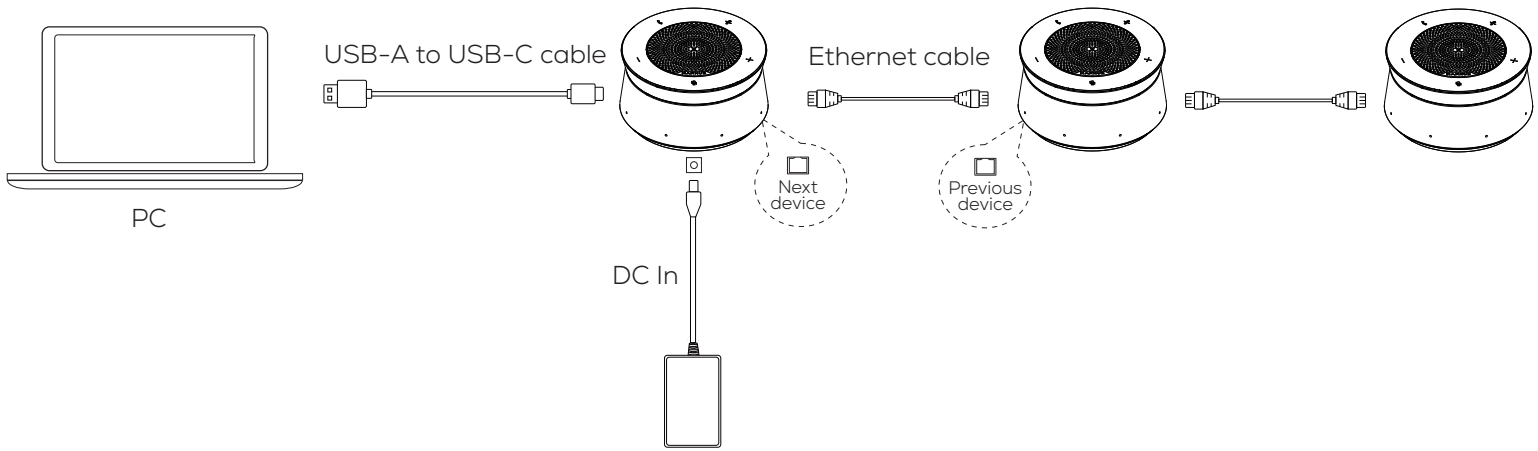

NOTE

Please ensure that the DC adaptor is connected to the first UC BM45, even if only one UC BM45 is connected to the PC.

MAXHUB

Option 2: Connect to the PC (4 to 6 UC BM45 Speakerphones)

Step 1: Connect the first and the fourth UC BM45 speakerphones to the power supply with power cables.

Step 2: Use an USB-A to USB-C cable to connect the first UC BM45 speakerphone to the room PC.

Step 3: Use Ethernet cables to connect the first UC BM45 speakerphone to the other UC BM45 speakerphones via the "Next device (RJ45 Out)" and "Previous device (RJ45 In)" ports. You can connect up to 6 UC BM45 speakerphones, with an ideal distance of 4.5 m (15 ft) between each speakerphone unit.

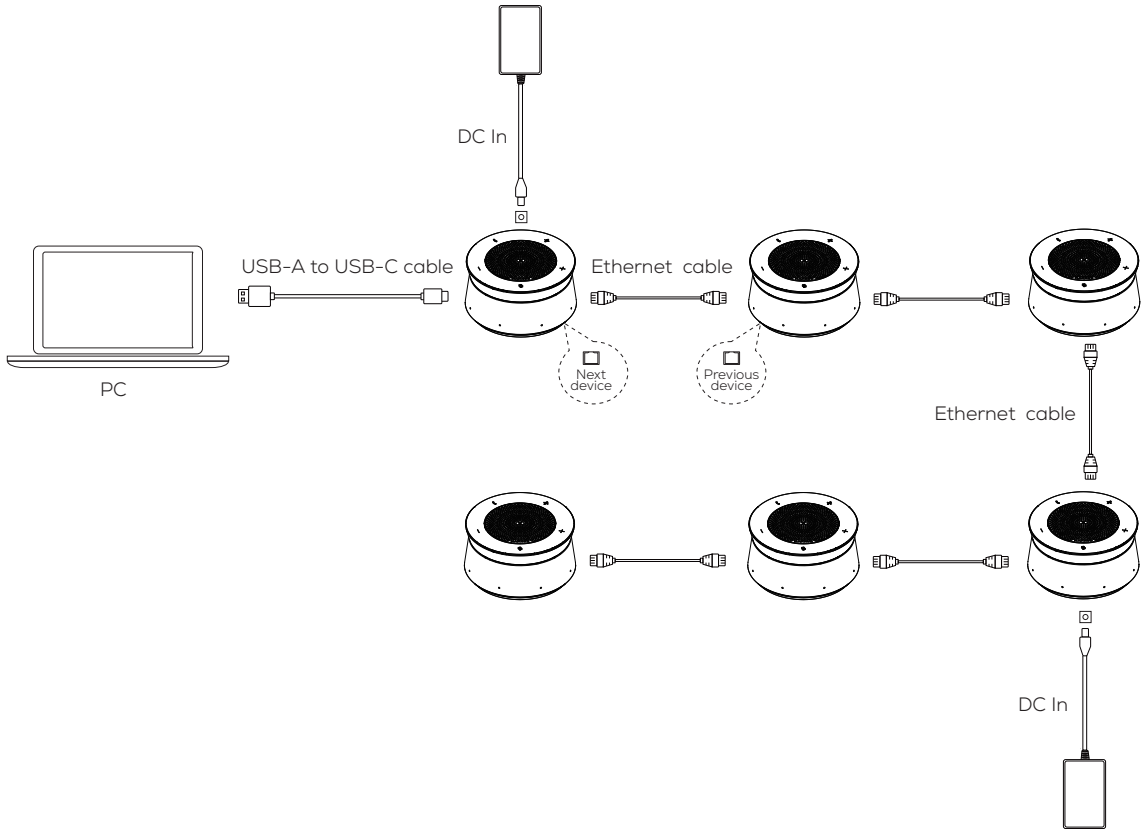

Option 3: Connect to the MAXHUB XBoard V7 (Daisy Chain)

Step 1: Use an Ethernet cable to connect the first UC BM45 speakerphone to the LAN port of the MAXHUB XBoard V7.

Step 2: Use Ethernet cables to connect the first UC BM45 speakerphone to the other UC BM45 speakerphones via the "Next device (RJ45 Out)" and "Previous device (RJ45 In)" ports. You can connect up to 3 UC BM45 speakerphones, with an ideal distance of 4.5 m (15 ft) between each speakerphone unit.

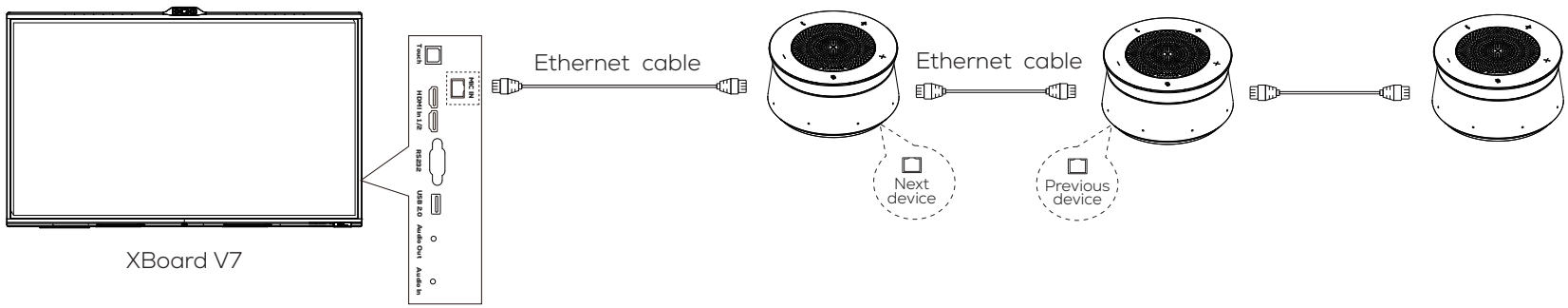

MAXHUB

IV. Installation

For UC BM45 speakerphone, you can put it on the tabletop directly or fix it to the tabletop with the bracket provided. Before installation, make sure that all devices you need are properly connected. Please follow the steps below to install the bracket of the speakerphone:

1. Remove the foot pads from the bottom of the Speakerphone.

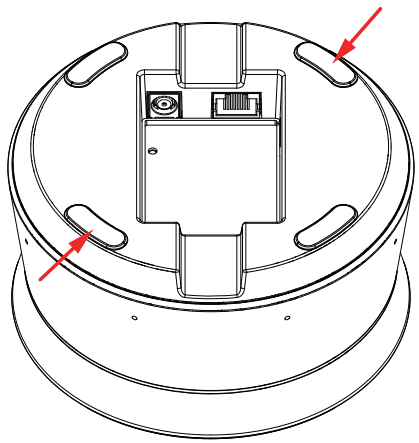

2. Use the screws provided to attach the bracket to the bottom of the Speakerphone.

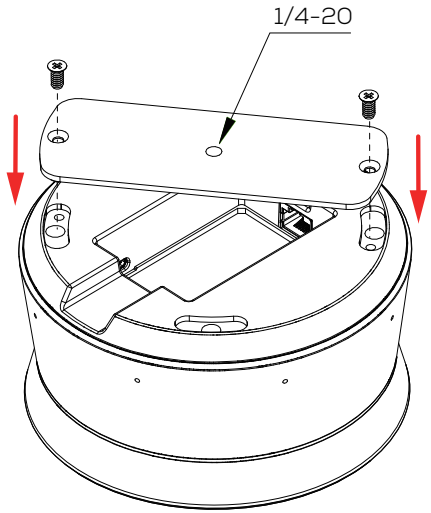

3. Drill a hole on the corresponding tabletop, and the recommended hole diameter is 7 mm.

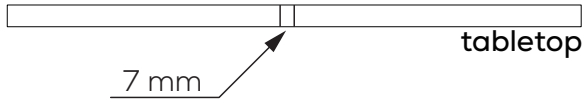

4. Use a 1/4”-20 outer diameter screw to secure the speakerphone to the hole on the tabletop.

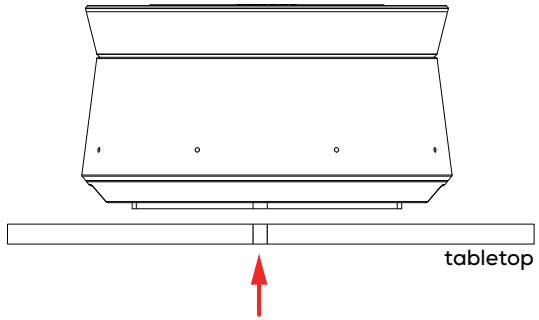

NOTE

The effective thread length of the bracket is 8 mm. Please prepare a 1/4-20 screw according to the thickness of the tabletop. Or you can secure it with a tripod.

V. Operation

Function Description:

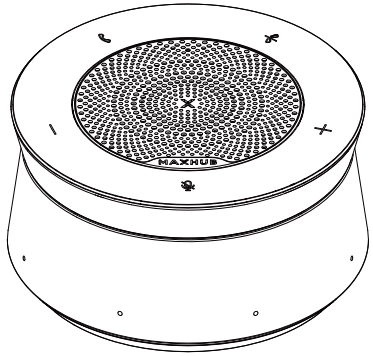

Button	Description
	Press to answer the call.
	Press and hold for two seconds to exit the conference.
+ —	Press to increase or decrease the volume.
	Press to mute/unmute.

Status LED:

Status	Indication
Power on / Not connected	Flashing white
Connected	Solid white
Muted	Microphone button with solid red
On a meeting call	1. Incoming call: Answer button flashing green and hang up button with solid red. 2. After answering: Answer button with solid green and hang up button with solid red. 3. Reject: Answer button and hangup button with soild white.
Join a meeting	Answer button with solid green and hang up button with solid red
Meeting ended	Press the hang up button and hold for two seconds to exit the meeting, with solid white.
Speakerphone Cascade	1. Host speakerphone with solid white. 2. Secondary speakerphones changed from flashing white to solid white.

MAXHUB

Firmware Upgrade:

You can update the firmware version through the Align application. On the UC BM45 Upgrade page, you can update the firmware version via Local Upgrade and Online Upgrade. For local upgrade, you can download the firmware from the download centre of the website: https://www.maxhub.com/support/trigger-download-center.

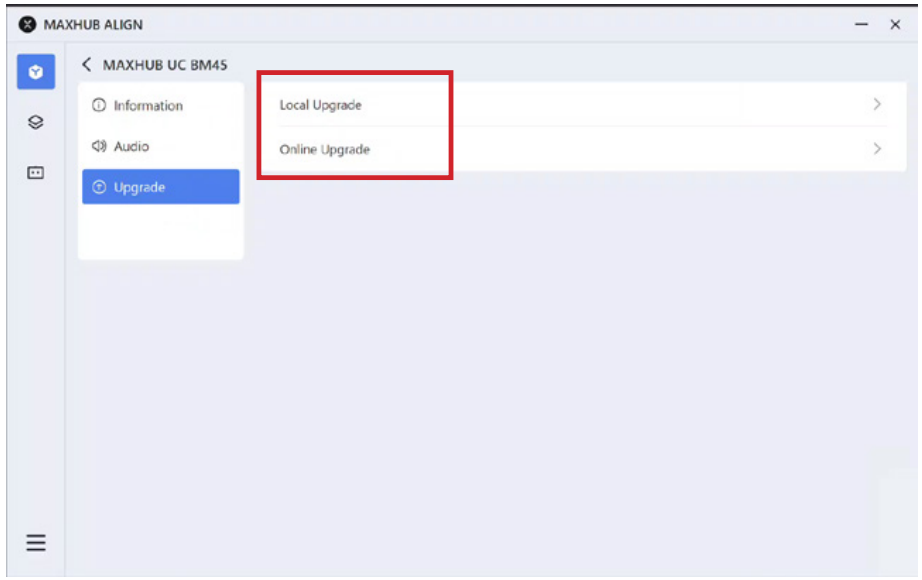

VI. Maintenance

Hereby, Guangzhou Shirui Electronics Co., Ltd. declares that the this product is compliant with the essential requirements.
The complete Declaration of Conformity may be requested through the following postal address:
MAXHUB EUROPE B.V.
BEURSPLEIN 37, 3011AA ROTTERDAM, NETHERLANDS

This symbol, affixed to the product or its packaging, indicates that the product must not be processed with househaold waste. It must be brought to an electric and electronic waste collection point for recycling and disposal. By the appropriate disposal of this product you also help in preventing potentially negative consequences for the environment and human health. The recycling of materials helps preserve our natural resources. For further information regarding the recycling of this product, please contact your municipality, local waste disposal centre or the store where the product was purchased.

FCC Statement

This equipment has been tested and found to comply with the limits for a Class B digital device, pursuant to part 15 of the FCC Rules. These limits are designed to provide reasonable protection against harmful interference in a residential installation. This equipment generates,uses and can radiate radio frequency energy and, if not installed and used in accordance with the instructions, may cause harmful interference to radio communications. However, there is no guarantee that interference will not occur in a particular installation. If this equipment does cause harmful interference to radio or television reception, which can be determined by turning the equipment off and on, the user is encouraged to try to correct the interference by one or more of the following measures:

- Reorient or relocate the receiving antenna
- Increase the separation between the equipment and receiver.
- Connect the equipment into an outlet on a circuit different from that to which the receiver is connected
- Consult the dealer or an experienced radio/TV technician for help.

FCC Warning

This device complies with Part 15 of the FCC Rules. Operation is subject to the following two conditions:
(1) this device may not cause harmful interference, and
(2) this device must accept any interference received, including interference that may cause undesired operation. Changes or modifications not expressly approved by the party responsible for compliance could void the user's authority to operate the equipment.

MAXHUB

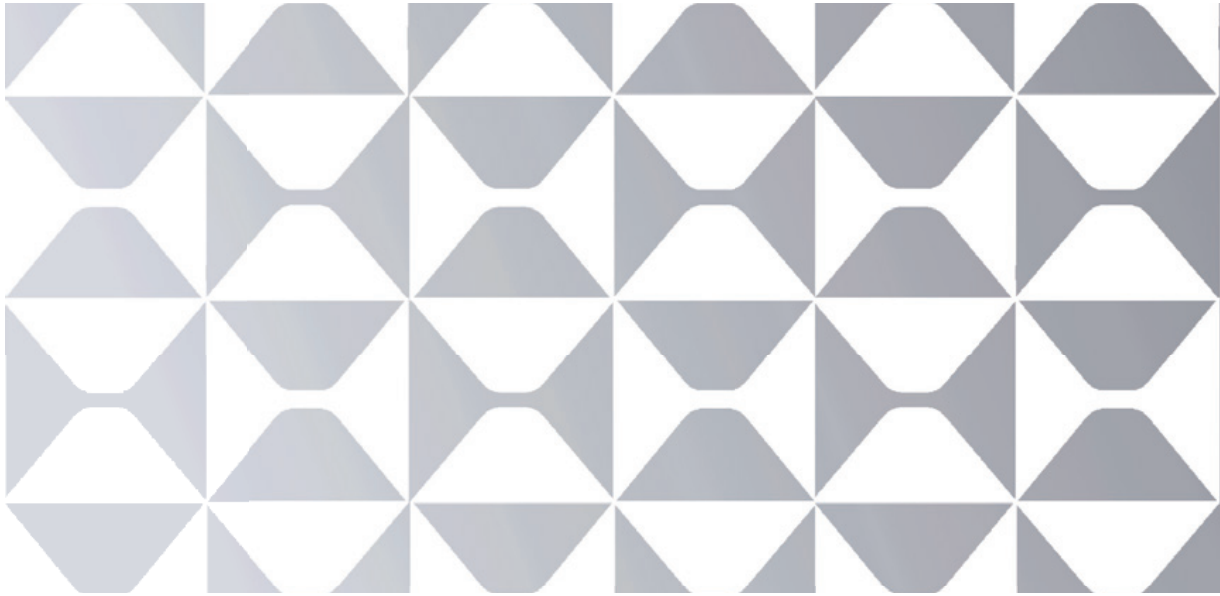

www.maxhub.com
sales@maxhub.com
maxhub-official
MAXHUB.Global