OWNER'S MANUAL

LG Digital Signage

(MONITOR SIGNAGE)

Please read the user manual before using this product to ensure safe and convenient use.

49XE4P-B 49XE4P-M
55XE4P-B 55XE4P-M

www.lg.com

Copyright © 2025 LG Electronics Inc. All Rights Reserved.

TABLE OF CONTENTS

BASIC 3

- Checking the Accessories.....3
- Checking the Product Components.....4
- Pixel Sensor.....5

GETTING READY 6

- Connecting the Cables.....6

CHECKING BEFORE INSTALLATION 9

- Installation Orientation.....9
- Installation Location.....11
- Wall Mount Holder.....13
- Safety and Precaution Guide for Installation.....14

INSTALLING THE PRODUCT..20

- Installation Conditions.....20
- Precautions When Designing a Case.....21
- Using the Input List.....33

PRECAUTIONS FOR USE.....34

- Dust.....34
- Afterimage.....34

PRODUCT SPECIFICATIONS .36

LICENCE.....40

WARNING - This equipment is compliant with Class A of CISPR 32. In a residential environment this equipment may cause radio interference.

BASIC

NOTE

- The accessories provided with your product may vary depending on the model or region.
- Product specifications or contents in this manual may be changed without prior notice due to upgrade of product functions.
- SuperSign Software & Manual
  - Visit *http://partner.lge.com* to download the latest SuperSign software and manual.

Checking the Accessories

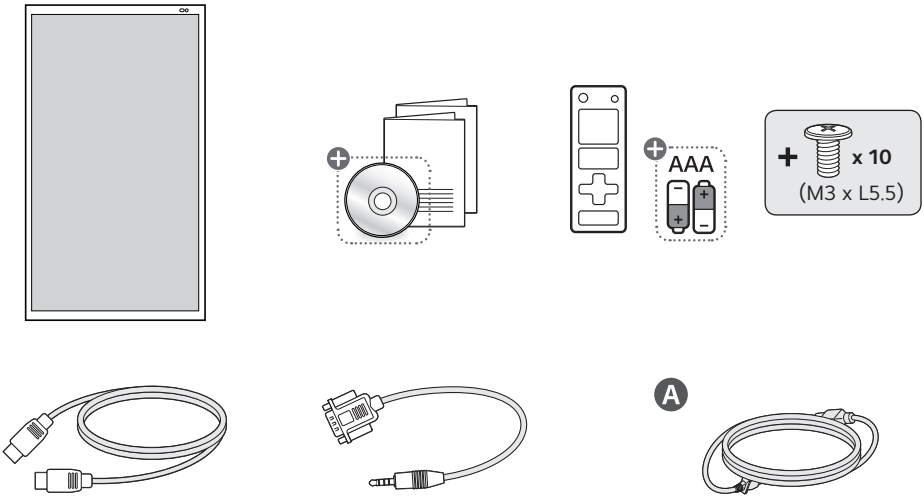

Depending on country

Checking the Product Components

The illustrations may differ depending on the model.

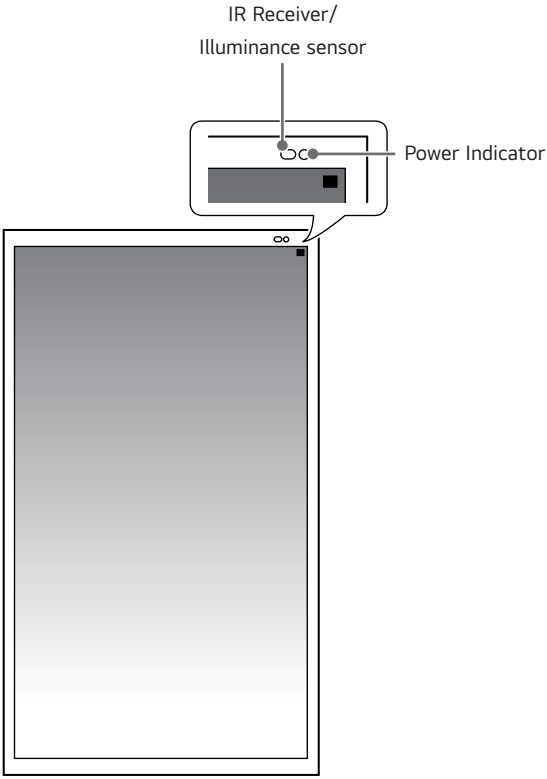

- IR Receiver: This is where the unit receives signals from the remote control.
- Illuminance sensor: Adjusts the screen brightness by measuring the amount of light.
- Power Indicator: This Indicator lights up red when the display operates normally (on mode). If the display is in sleep mode (in Power Saving mode), this indicator changes colour to amber.

Pixel Sensor

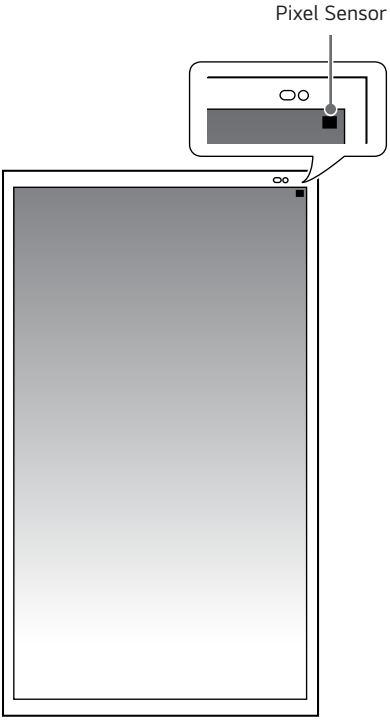

- Pixel Sensor: Measures the RGB of pixels in that area.

GETTING READY

Connecting the Cables

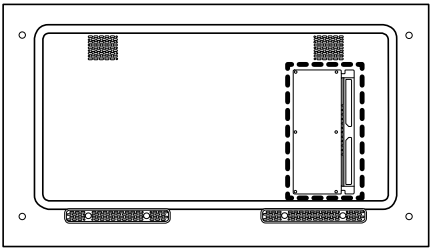

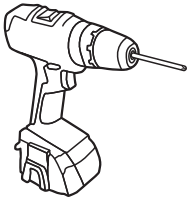

1

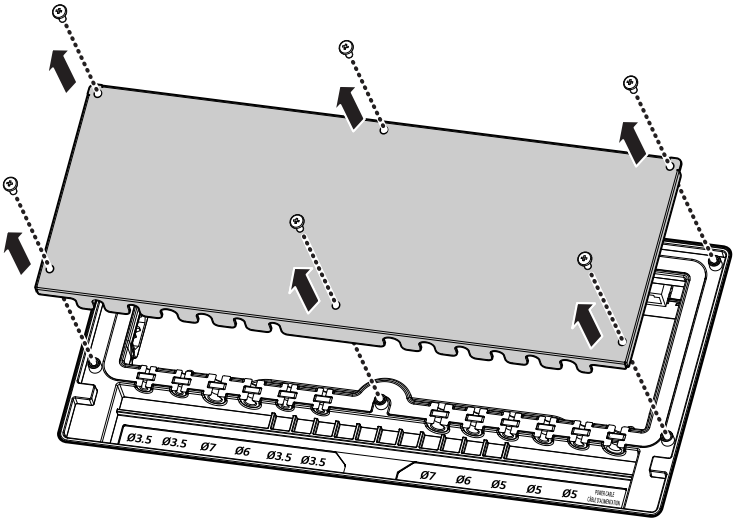

2

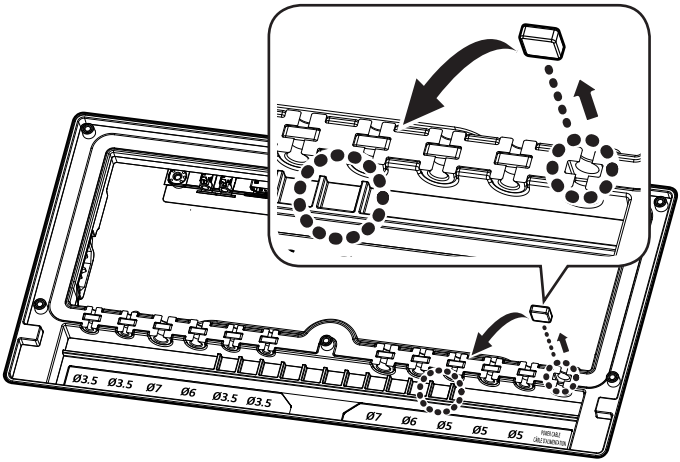
Ø3.5 Ø3.5 Ø7 Ø6 Ø3.5 Ø3.5
Ø7 Ø6 Ø5 Ø5 Ø5

3

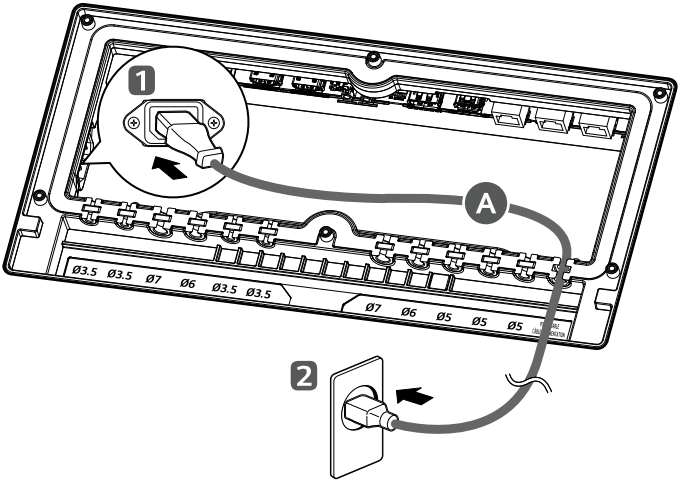
1
A
2
Ø3.5 Ø3.5 Ø7 Ø6 Ø3.5 Ø3.5
Ø7 Ø6 Ø5 Ø5 Ø5

4

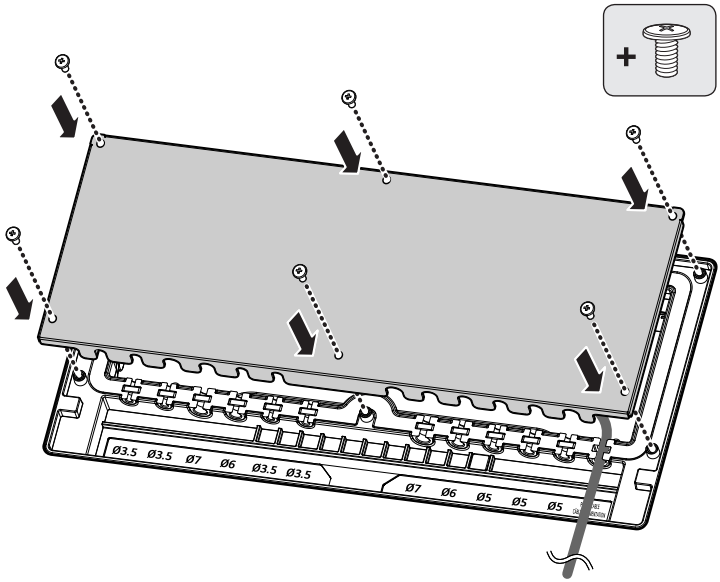

CHECKING BEFORE INSTALLATION

We are not responsible for product damage caused by failure to follow the guide.

Installation Orientation

Using Vertically

When installing vertically, rotate the monitor 90 degrees anti-clockwise while facing the front of the screen.

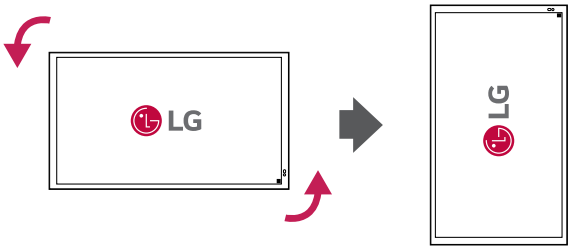

Tilt Angle

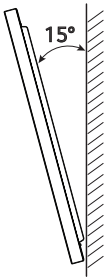

Ceiling, Floor Orientation

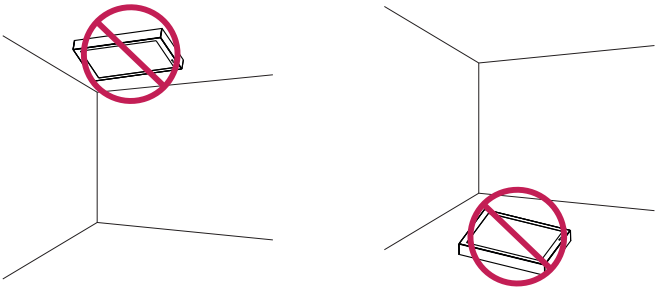

⚠ CAUTION

- Do not hang the enclosure on the ceiling or lay it on the floor.

Installation Location

We are not responsible for product damage caused by failure to follow the guide.

Outdoor

When wall mounting the product, install a partition that separates the air from the inlet and exhaust. Failure to do so may result in malfunctioning of the product and will not be covered under warranty.

Installing on a Wall

- When installing the enclosure close to the wall, a separation distance of at least 40 mm is required.
- Install a partition between the wall and the product to separate the inlet and exhaust air from mixing.

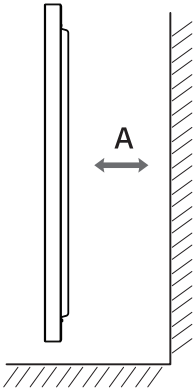

A: 40 mm or more

Installation of the Cased Product

- When using a separate external case and installing the enclosure close to the wall, a separation distance of at least 100 mm is required.
- Do not block the ventilation openings or place objects near them.

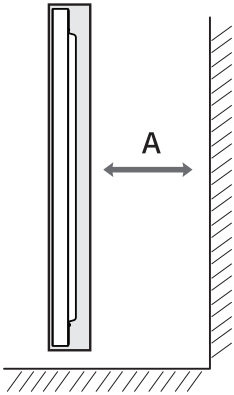

A: 100 mm or more

Installation Area

- Do not allow the absorption of the product, snow, etc. to accumulate in the air inlet/outlet.
- Designed for use in dusty environments.

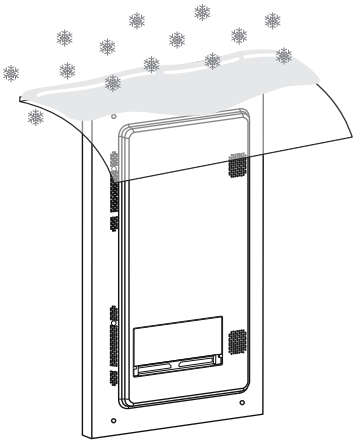

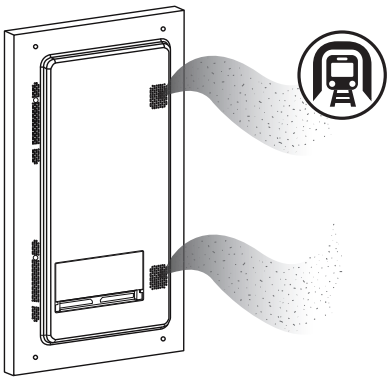

Wall Mount Holder

To install the monitor on a wall, attach a wall mount holder (optional) to the back of the monitor.

Take caution, and ensure that the wall mount holder (optional) is securely fixed to the monitor and to the wall.

The VESA dimensions of the wall mount by model are as follows.

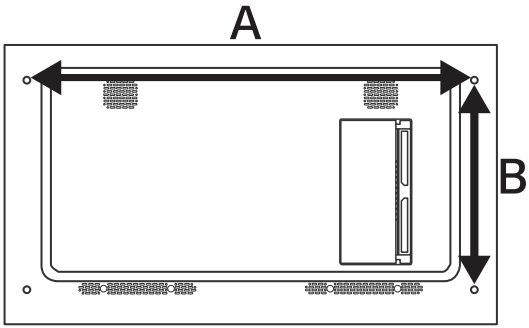

Model	VESA Dimensions (A x B) (mm)	Standard Dimensions	Length (Maximum) (mm)	Quantity
49XE4P-B 49XE4P-M	1048 x 490	M8	12	4
55XE4P-B 55XE4P-M	1186 x 560	M8	12	4

⚠ CAUTION

- Disconnect the power cord first, and then move or install the monitor. Otherwise, it may result in electric shock.
- If the monitor is installed on a ceiling or inclined wall, it may fall and result in injury.
- Damage to the monitor by tightening the screws too tightly may void your warranty.
- Use screws and wall mount plates conforming to VESA standards. Breakage or personal injury due to use or misuse of inappropriate components is not covered by the warranty of this product.

NOTE

- Using screws longer than the indicated depth may damage the inside of the product. Be sure to use the proper length.
- For more information on installation, please refer to the user manual for the wall mount.

Safety and Precaution Guide for Installation

When Exposed to Direct Sunlight

- While powered off, make sure the device is not exposed to direct sunlight for a prolonged period.
  - Protect the display with cloth or a box when storing the device after it has been powered off.
  - This can prevent faults such as black spots, creases, and yellowing.
- After connecting the power, activate the [Screen Off & Backlight On] feature.
  - Turning the screen off can help prevent black spots, creases, yellowing, condensation, and malfunctions due to moisture.
  - For the [Screen Off & Backlight On] feature, please refer to the User Guide on our homepage.
  - At sub-zero temperatures, the display will be able to turn on after the internal temperature rises.

⚠ CAUTION

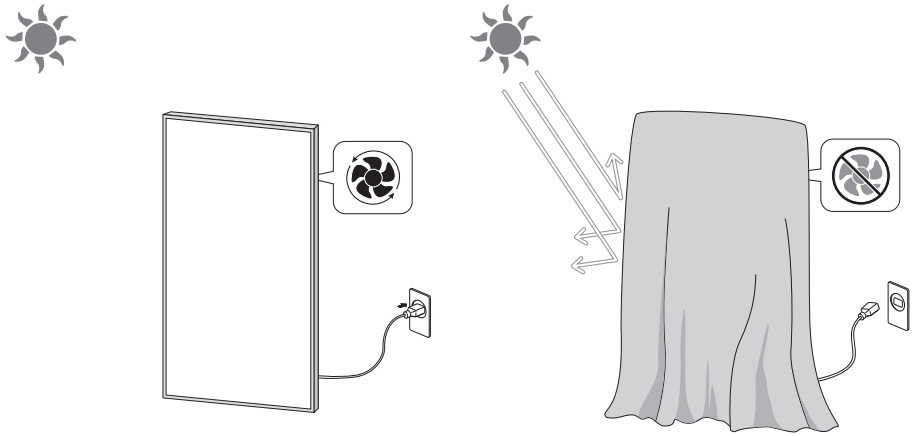

Preventing Condensation

⚠ CAUTION

- Attaching Screws
  - Attach all of the interface cover and back cover screws of the product without omission.
  - If you fail to fasten any of the screws, moisture may enter the product and condensation may occur.

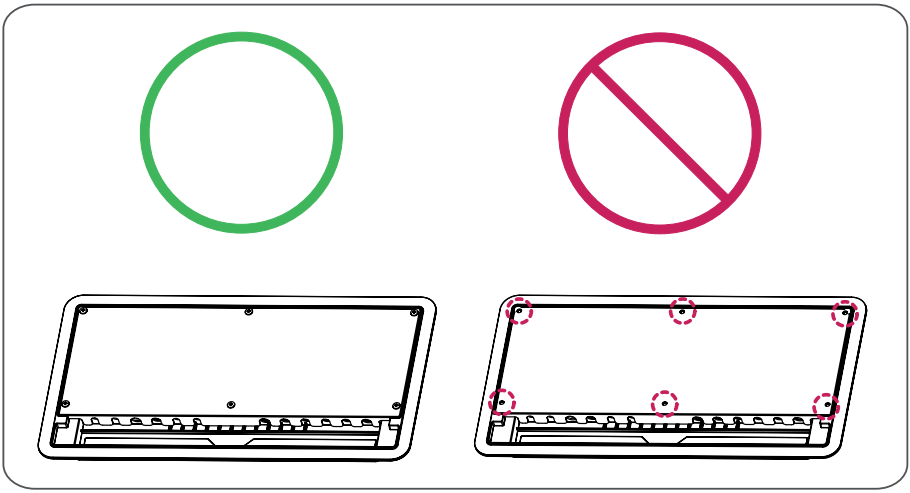

⚠ CAUTION

- Cabling
  - Insert the square rubber gasket into the cable insertion part without omission.
  - When using a cable, remove the square rubber gasket and insert the cable that matches the dimensions of the cable insertion part, ensuring there are no gaps.

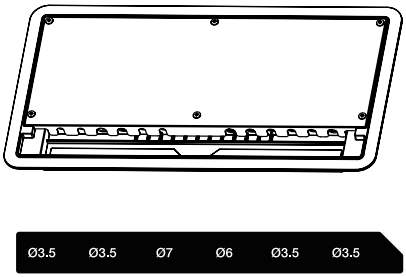

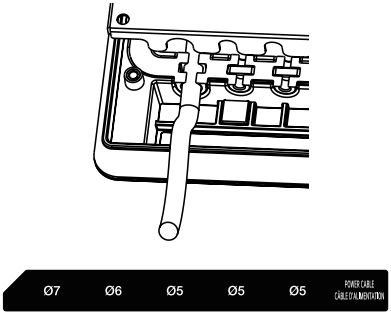

- 7 Ø hole : For inserting 7~7.5 Ø cables
- 6 Ø hole : For inserting 6~6.5 Ø cables
- 5 Ø hole : For inserting 5~5.5 Ø cables
- 3.5 Ø hole : For inserting 3.5~4 Ø cables

- Remove the square rubber gasket only where the cable is inserted.

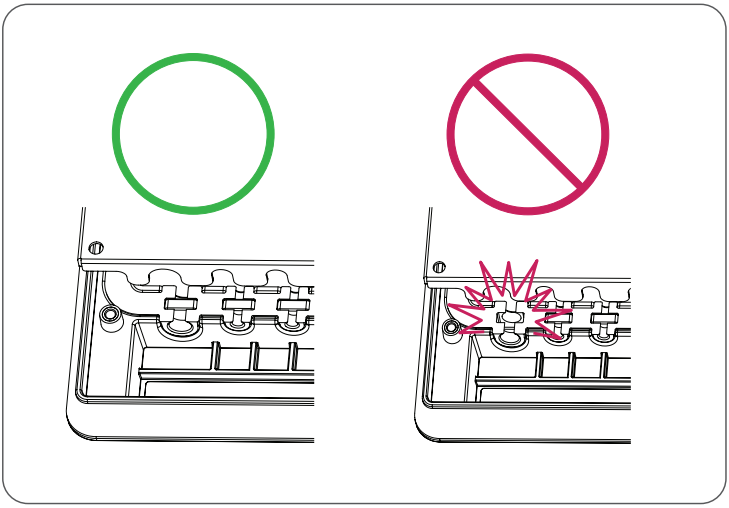

- Be sure to press the cable firmly so that there are no gaps from the cable being inserted.

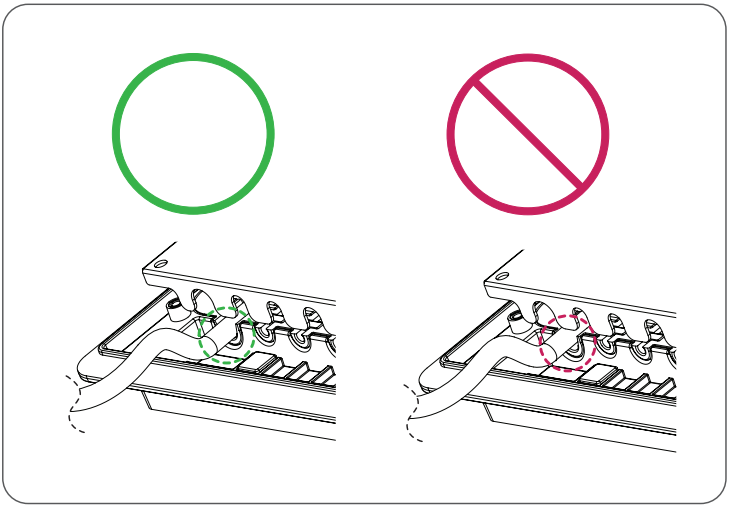

- Use a cable that fits the size of the hole in the cable insert.
- If the cable used is too thick and creates a gap, moisture may enter.

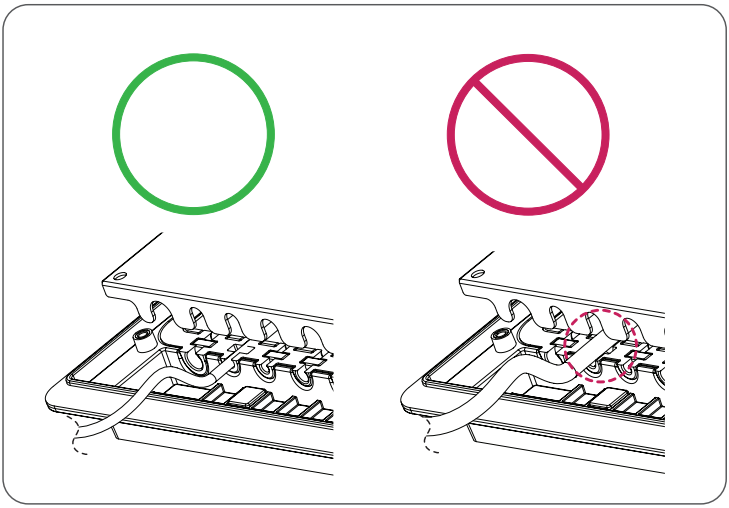

- Use a cable that fits the size of the hole in the cable insert.
- If the cable used is too thin and creates a gap, moisture may enter.

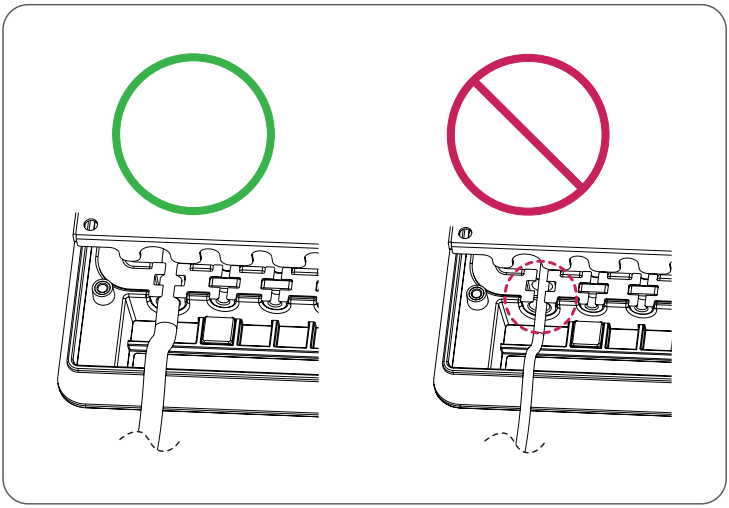

⚠ CAUTION

- [Fan Status]
  - Check whether the fan is operating normally in the [Fan Status] menu with the remote control.
  - ⚙ (Settings) → [General] → [System Information] → [Fan Status]

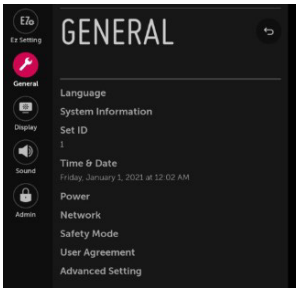

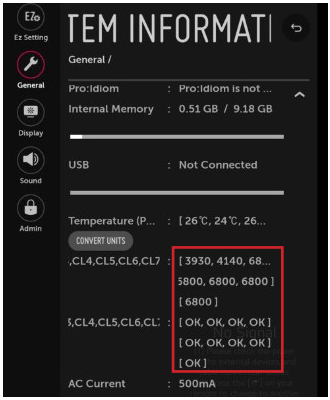

⚠ CAUTION

- [PM Mode]
  - Outdoor preference must be turned on to prevent condensation.
  - ⚙ (Settings) → [General] → [Power] → [PM Mode] → [Screen Off & Backlight On]

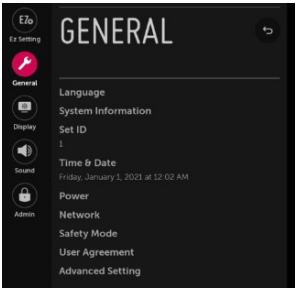

⚠ CAUTION

- Observe all precautions to prevent condensation. Otherwise, the product may have problems with condensation and waterproof performance, which will void the warranty.

INSTALLING THE PRODUCT

Installation Conditions

Air flow direction

- For cooling purposes, a fan is used to intake air through the inlet and hot air is discharged through the outlet.

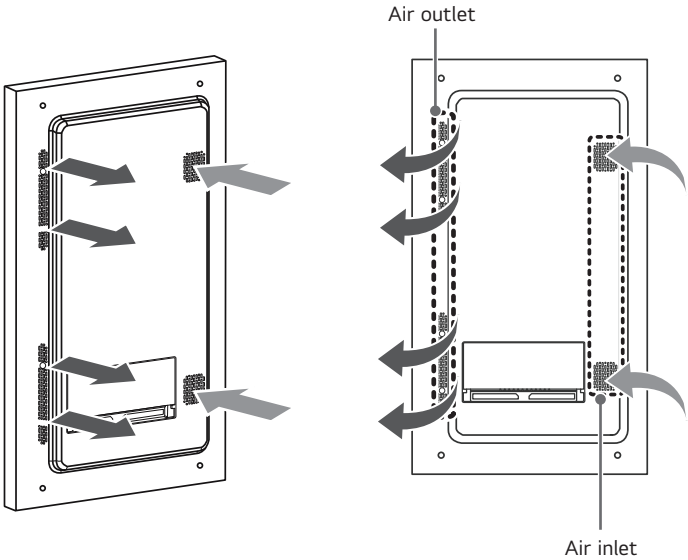

NOTE

- Do not block the ventilation openings on the enclosure or place objects near them.

Precautions When Designing a Case

Partition design guide

- When making a case for the enclosure, make sure to separate the inlet and outlet with a partition.
- Place sponge pads, etc., between the partition and the enclosure to completely block air flow.

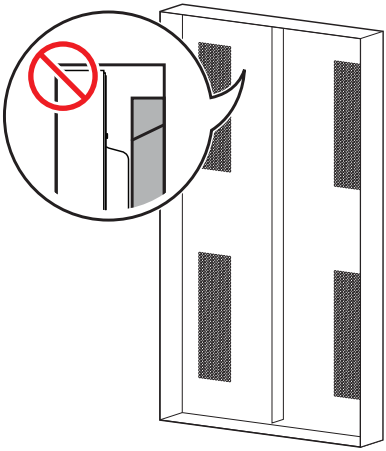

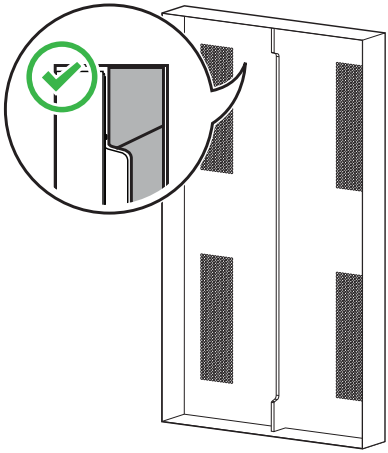

Partitions when installing with an optional media player

- When installing a media player as an external component, make sure it is separated from the enclosure.

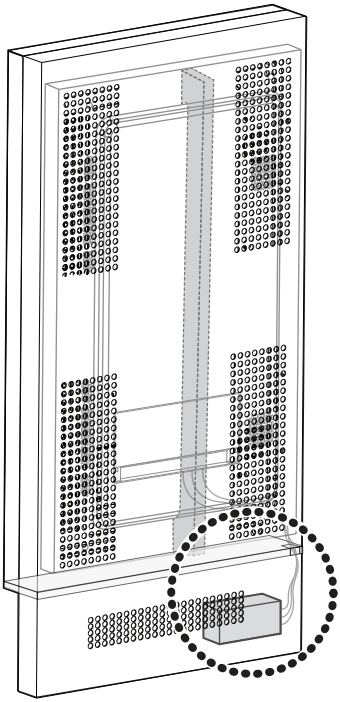

NOTE

- There should be no gap between the media player and outdoor unit; only allow cables through the partition.
- The optional media player is an additional source of heat and the increased temperature inside the enclosure unit may cause the outdoor unit to malfunction.
  - This malfunction occurring in this manner will not be covered by the warranty.
- If the partition is not applied, air from the outlet may enter the unit again through the inlet.
  - This may reduce the heat dissipation performance of the product and is not warranted in this case.

Inlet and outlet designs

- The aperture must be at least 50 % of the total aperture area.

Single enclosure unit

- Make sure to separate the inlet and outlet to prevent the air around one from entering the other.

Case 1

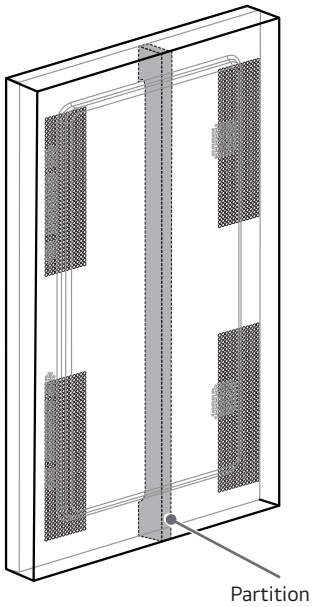

Case 2

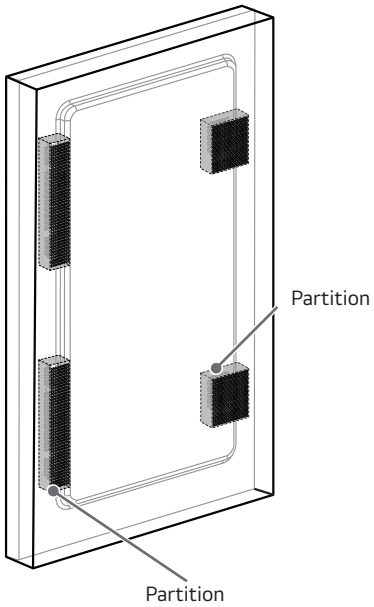

Case 3

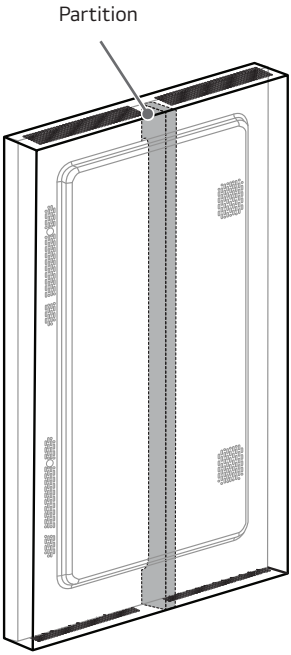

Case 4

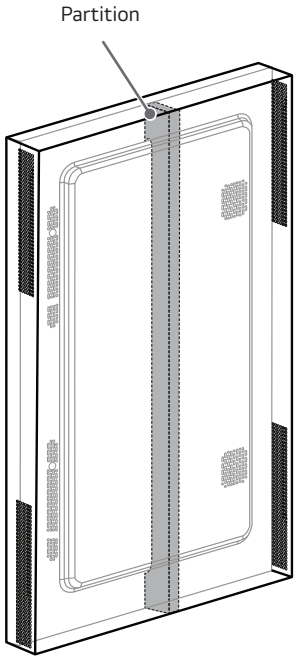

1 x N one-side enclosure unit

- When installing more than one product together, make sure to separate the inlet and outlet to prevent the air around one from entering another.

Case 1

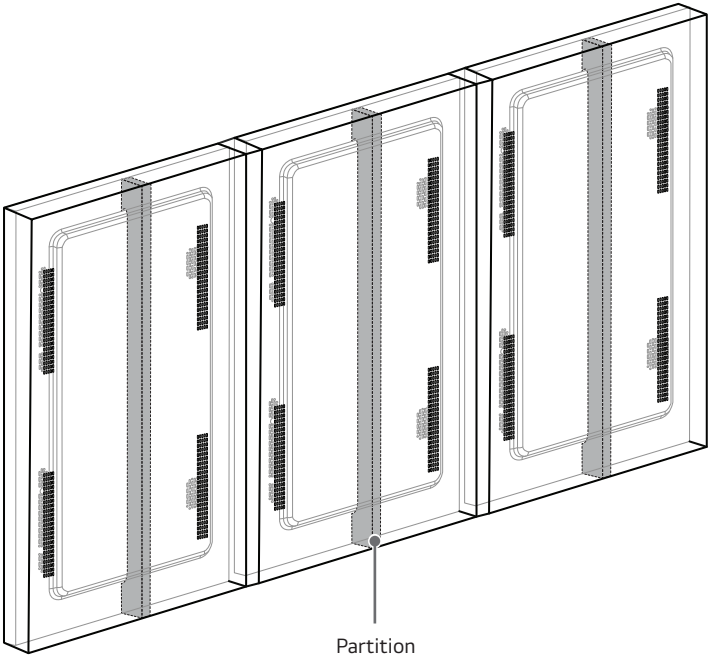

Case 2

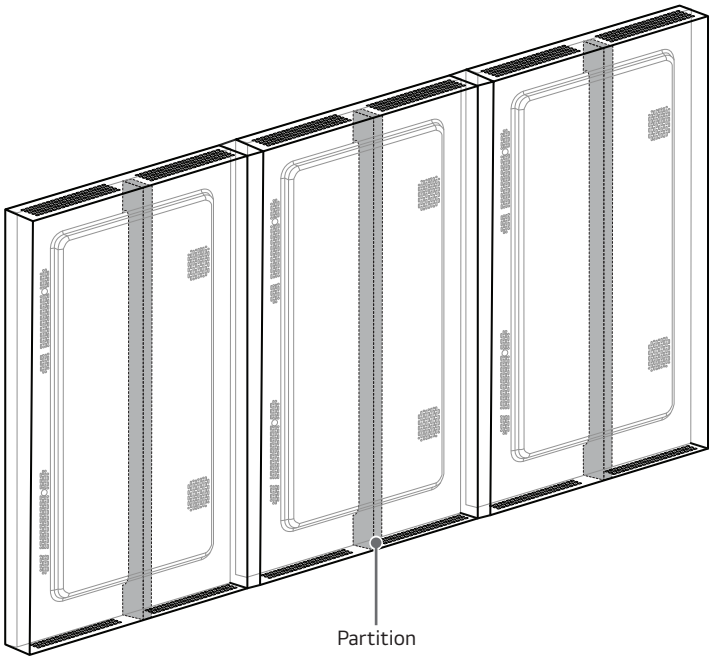

Double-sided enclosure unit

- When installing products in a back-to-back configuration, make sure to separate the inlet and the outlet to prevent the air around one from entering another.
- When installing products in a back-to-back configuration, make sure the ventilation openings are on the bottom, top or sides.
- The thickness of material that is installed between two products is not included in the distance. (Distance between products: 80 mm).

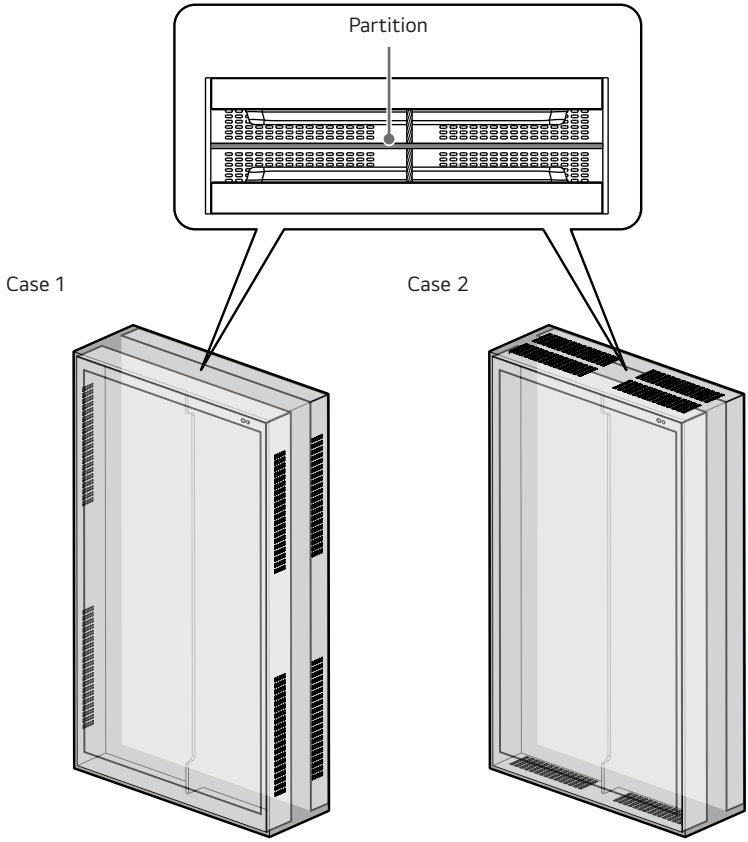

CAUTION

- When designing inlet and outlet, the following opening area shall be satisfied.
  - Failure to do so may result in product problems, which are not warranted.
- If a separate case is installed on the vessel, design it with the recommended opening area and aperture. Failure to meet the recommended aperture plane and aperture ratio may cause the product to malfunction. In such cases, the warranty does not apply.

NOTE

- The partition should be in close contact with the case as well as with the enclosure when installed.
- It is recommended that the inlet and outlet be located at the same position as the enclosure.
- If possible, install ventilation openings around the inlet and outlet of the enclosure.
- If you install both sides or multiple units together, you must increase the opening area by the number of installed units.
- Aperture plane

Model	Air Inlet	Air Outlet
49XE4P-B 49XE4P-M	8400 mm^2	13200 mm^2
55XE4P-B 55XE4P-M	8400 mm^2	44000 mm^2

When Installing a Media Player/PC Externally

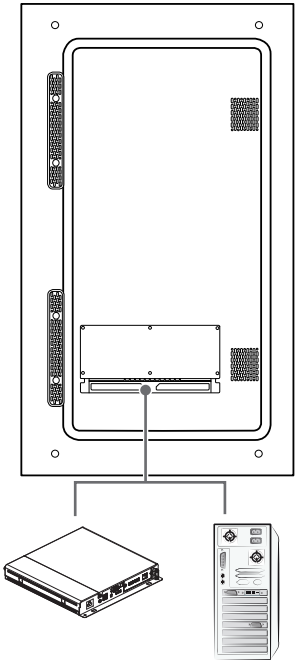

NOTE

- If you set the tile mode using HDMI, you will not be able to watch HDCP-encrypted content.
- If the signal cable between the product and your PC is too long, make sure to use the Booster or optical cable.
- DP Cable - Use a DP cable that is certified to DP 1.1a standard or higher.
- When installing a media player/PC externally, you can only connect HDMI™ IN, USB 2.0 IN and LAN IN.

Use speaker out Port

1 Turn off the power and connect the speakers.
2 Turn off the power and disconnect the speakers.
3 Supports 6 Ω resistor speakers R, L (10 W, 10 W)

When Installing the HDBaseT Cable

49/55XE4P-M

The HDBaseT Cable Install

- LAN cables are fairly resilient. Yet, any rough handling, such as tight tie wraps, clamping or stapling can damage the cable, compromising performance or even preventing signal transmission. Tie cables loosely with appropriate cable wraps.
- Another important issue for cable integrity is the bend radius. Bend radius is the inside curve of the cable during and after installation. It is best to keep the minimum bend radius at least at four times the diameter of the cable.
- Cables should be kept at a distance of at least 30 cm from power cables. In an environment prone to high EMI, it is best to use shielded cables. Most Cat5e cables are unshielded, which makes them more flexible, durable and inexpensive. Thou shalt keep your cables away from power sources If using unshielded cables, keep them away from any source of EMI such as other cables, transformers and light fixtures. In high RF environments, it is best to use shielded cables.
- If possible, avoid patch cords or cables altogether, as every connection introduces losses in the transmission. If absolutely necessary, make sure to use less than two per cable run and keep each less than five meters from the end.

HDBaseT Recommended cable

- Visit the website (*https://products.hdbaset.org/avcat/ctl19001/index.cfm*) and refer to information in details.

Using Patch Cables (Ex: CAT6 FTP)

The total run of an HDBaseT cable installation may include up to two patch cables. This is referred to as a three-segment installation.

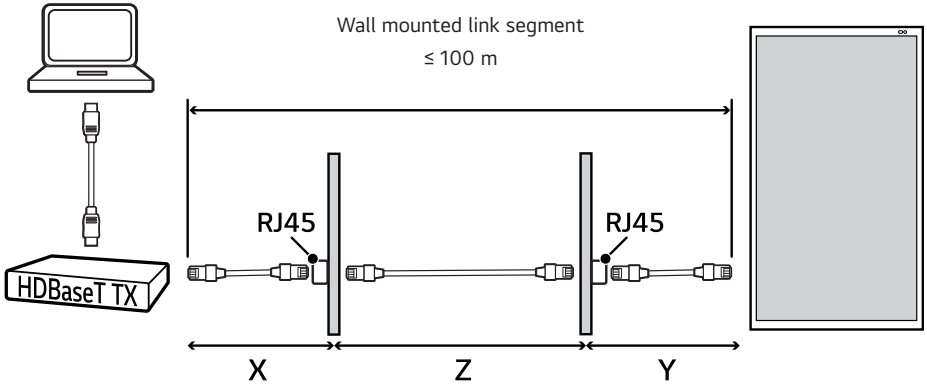

- Three-segment cable installation
  - X = Cable length ≤ 5 m
  - Y = Cable length ≤ 5 m
  - Z = 100 m – X – Y

HDBT support function

1 Set host mode (Shipment mode): HDMI™ IN, USB 2.0 IN, LAN IN
2 Set device mode (Device mode can be changed in settings.): HDMI™ IN, WEBCAM, LAN IN
3 The webcam connect set input USB 2.0 IN, and connected HDBT.

Use speaker out Port

1 Turn off the power and connect the speakers.
2 Turn off the power and disconnect the speakers.
3 Supports 6 Ω resistor speakers R, L (10 W, 10 W)

Using the Input List

49/55XE4P-B

(HOME) →

• HDMI1 → HDMI2 → DISPLAYPORT

49/55XE4P-M

(HOME) →

• HDMI1 → HDMI2 → HDBaseT → DISPLAYPORT

PRECAUTIONS FOR USE

WARNING

- Do not put metals such as coins, hairpins, or metal attachments, or flammable objects such as paper or matches into the product.

Dust

The warranty will not cover any damage caused by using the product in an excessively dusty environment.

Afterimage

- After-image appears when the product is turned off.
  - Pixels may be damaged rapidly if a still image is displayed on the screen for a long period of time. Use the screen-saver function.
  - Switching from a screen with high differences in luminance (black and white or grey) to a darker screen may cause an afterimage. This is normal due to the display characteristics of this product.
- When the LCD screen is in a still pattern for extended periods of use, a slight voltage difference may occur between the electrodes that operate the liquid crystal (LC). The voltage difference between the electrodes increases over time and tends to keep the liquid crystal aligned in one direction. At this time, the previous image remains, which is called an afterimage.
- Afterimages do not occur when continuously changing images are used but take place when a certain screen is fixed for a long time. The following are operational recommendations for reducing the occurrence of afterimages when using a fixed screen. The maximum recommended time for switching the screen is 12 hours. Shorter cycles are better for preventing afterimages.

• Recommended Usage Condition

1 Change the background colour and text colour at equal intervals.

- Afterimages occur less when the colours to be changed are complementary to one another.

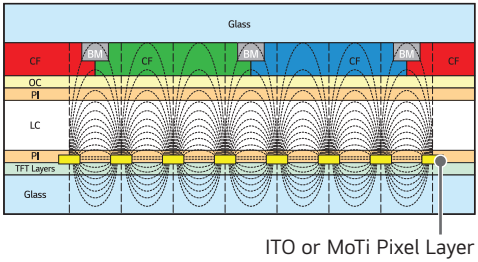

2 Switch the screen at equal time intervals.

- Take caution, and ensure that text or images from before the screen change are not left in the same location after the screen change.

PRODUCT SPECIFICATIONS

Without prior notice, all product information and specifications contained in this manual are subject to change to improve the performance of the product.

Input / Output ports	HDMI™ IN 1, HDMI™ IN 2, DP IN, USB 2.0 IN 1, USB 2.0 IN 2, LAN IN, LAN OUT, SPEAKER, RS-232C IN, RS-232C OUT, HDBaseT IN[1]	
Embedded battery	Applied	
Resolution	Recommended resolution	1920 x 1080 @ 60 Hz - This may not be supported on some OS or graphics card types.
	Maximum resolution	
Environmental Conditions	Operating Temperature Operating Humidity	-30 °C to 50 °C 5 % to 100 % (Condition for preventing condensation)
	Storage Temperature Storage Humidity	-20 °C to 60 °C 5 % to 100 % (Condition for preventing condensation) * Product box packaging storage conditions

49XE4P-B **49XE4P-M**	
Power Voltage	100-240 V~ 50/60 Hz 4.3 A
Dimensions (Width x Height x Depth) / Weight	1153 mm x 656.2 mm x 88 mm / 31.2 kg

55XE4P-B **55XE4P-M**	
Power Voltage	100-240 V~ 50/60 Hz 4.3 A
Dimensions (Width x Height x Depth) / Weight	1292.5 mm x 737.4 mm x 88 mm / 38 kg

[1] Only for 49/55XE4P-M model.

HDMI / HDBaseT [1] / DisplayPort (PC) support mode

Resolution	Horizontal frequency (kHz)	Vertical frequency (Hz)
640 x 480	31.469	59.94
800 x 600	37.879	60.317
1024 x 768	48.363	60
1280 x 720	44.772	59.855
1366 x 768	47.712	60
1280 x 1024	63.981	60.02
1680 x 1050	65.29	59.954
1920 x 1080	67.5	60

HDMI / HDBaseT [1] / DisplayPort (DTV) support mode

Resolution	Horizontal frequency (kHz)	Vertical frequency (Hz)
480/60p	31.5	60
576/50p	31.25	50
720/50p	37.5	50
720/60p	45	60
1080/50i	28.1	50
1080/60i	33.75	60
1080/50p	56.25	50
1080/60p	67.5	60

[1] Only for 49/55XE4P-M model.

NOTE

- When using HDMI / HDBaseT / DisplayPort inputs, PC and DTV resolutions can be adjusted in the Input Label.
- Vertical frequency: The product display functions by the screen image changing dozens of times every second like a fluorescent lamp. The vertical frequency or refresh rate is the number of times the image display is repeated per second. The unit is Hz.
- Horizontal frequency: The horizontal interval is the time taken to display one horizontal line. When 1 is divided by the horizontal interval, the number of horizontal lines displayed every second can be tabulated as the horizontal frequency. The unit is kHz.

Wireless module (LGSBWAC92) Specifications	
Wireless LAN (IEEE 802.11a/b/g/n/ac)	
Frequency range (MHz)	**Output power (Max.) (dBm)**
2400 to 2483.5	18
5150 to 5725	18
5725 to 5850	12
Bluetooth	
Frequency range (MHz)	**Output power (Max.) (dBm)**
2400 to 2483.5	8

- As band channels can vary per country, the user cannot change or adjust the operating frequency. This product is configured for the regional frequency table.
- For consideration of the user, this device should be installed and operated with a minimum distance of 20 cm between the device and the body.

(Only Nigeria)

Connection and use of this communication equipment is permitted by the Nigerian Communications Commission.

(Only Hong Kong)

Wireless module (LGSBWAC92) Specifications	
Wireless LAN (IEEE 802.11a/b/g/n/ac)	
Frequency range (MHz)	**Output power (Max.) (dBm)**
2400 to 2483.5	18
5150 to 5350	18
5725 to 5850	12
Bluetooth	
Frequency range (MHz)	**Output power (Max.) (dBm)**
2400 to 2483.5	8

- As band channels can vary per country, the user cannot change or adjust the operating frequency. This product is configured for the regional frequency table.
- For consideration of the user, this device should be installed and operated with a minimum distance of 20 cm between the device and the body.

(Only Vietnam)

Wireless module (LGSBWAC92) Specifications	
Wireless LAN (IEEE 802.11a/b/g/n/ac)	
Frequency range (MHz)	**Output power (Max.) (dBm)**
2400 to 2483.5	17.5
5150 to 5350	17.5
5725 to 5850	12
Bluetooth	
Frequency range (MHz)	**Output power (Max.) (dBm)**
2400 to 2483.5	8
• As band channels can vary per country, the user cannot change or adjust the operating frequency. This product is configured for the regional frequency table. • For consideration of the user, this device should be installed and operated with a minimum distance of 20 cm between the device and the body.	

(Only Philippines)

Wireless module (LGSBWAC92) Specifications	
Wireless LAN (IEEE 802.11a/b/g/n/ac)	
Frequency range (MHz)	**Output power (Max.) (dBm)**
2400 to 2483.5	18
5150 to 5725	18
5725 to 5850	18
Bluetooth	
Frequency range (MHz)	**Output power (Max.) (dBm)**
2400 to 2483.5	8
• As band channels can vary per country, the user cannot change or adjust the operating frequency. This product is configured for the regional frequency table. • For consideration of the user, this device should be installed and operated with a minimum distance of 20 cm between the device and the body. • FCC ID: BEJLGSBWAC92 / IC: 2703H-LGSBWAC92	

LICENCE

Supported licenses may differ by model. Visit *www.lg.com* for more information on licenses.

The terms HDMI, HDMI High-Definition Multimedia Interface, HDMI trade dress and the HDMI Logos are trademarks or registered trademarks of HDMI Licensing Administrator, Inc.

Manufactured under license from Dolby Laboratories. Dolby, Dolby Vision, Dolby Vision IQ, Dolby Audio, Dolby Atmos, and the double-D symbol are trademarks of Dolby Laboratories Licensing Corporation.

Covered by patents at patentlist.accessadvance.com

The Bluetooth® word mark and logos are registered trademarks owned by Bluetooth SIG, Inc. and any use of such marks by LG Electronics Inc. is under license. Other trademarks and trade names are those of their respective owners.

The model and serial number of the product are located on the back and on one side of the product. Record them below in case you ever need service.

MODEL

SERIAL NO.

Temporary noise is normal when powering ON or OFF this device.