OWNER'S MANUAL

LG Digital Signage

(MONITOR SIGNAGE)

Please read this manual carefully before operating your set and retain it for future reference.

65EJ5E

www.lg.com

Copyright © 2018 LG Electronics Inc. All Rights Reserved.

ENGLISH

TABLE OF CONTENTS

SAFETY PRECAUTION 3

- Precautions In Installing the Product.....3
- Precautions to the AC Adapter and Electrical Power 5
- Precautions In Moving the Product 7
- Precautions In Using the Product.....8
- Mounting on a Wall.....9

LICENSES..... 10

ASSEMBLY AND PREPARATION..... 11

- Optional Accessories.....13
- IR Receiver.....14
- Installing on a Wall.....15
- Tiling Displays 18

How to Mount the Set

REMOTE CONTROL..... 27

MAKING CONNECTIONS..... 29

- Connecting to a PC.....29
- External Device Connection.....29
- Using the Input List 31
- Connecting Multiple Monitors.....31

TROUBLESHOOTING..... 33

PRODUCT SPECIFICATIONS..... 35

Warning: This equipment is compliant with Class A of CISPR 32. In a residential environment this equipment may cause radio interference.

SAFETY PRECAUTION

Please read these safety precautions carefully before using the product.

WARNING

If you ignore the warning message, you may be seriously injured or there is a possibility of accident or death.

CAUTION

If you ignore the caution message, you may be slightly injured or the product may be damaged.

WARNING

- This product cannot be installed outdoors. Only use the product indoors as installed by the installer.

Precautions In Installing the Product

WARNING

- Keep away from heat sources like electrical heaters.
  - Electrical shock, fire, malfunction, or deformation may occur.
- Keep the packing anti-moisture material or vinyl packing out of the reach of children.
  - Anti-moisture material is harmful if swallowed. If swallowed by mistake, force the patient to vomit and visit the nearest hospital. Additionally, vinyl packing can cause suffocation. Keep it out of the reach of children.
- Do not put heavy objects on the product or sit upon it.
  - If the product collapses or is dropped, you may be injured. Children must pay particular attention.
- Do not leave the power or signal cable unattended on the pathway.
  - The passerby can trip or fall, which can cause electrical shock, fire, product breakdown, or injury.
- Install the product in a neat and dry place.
  - Dust or moisture can cause electrical shock, fire or product damage.
- If you can smell smoke or other odors or hear a strange sound unplug the power cord and contact the service center.
  - If you continue to use without taking proper measures, electrical shock or fire can occur.
- If you drop the product or the case is broken, turn off the product and unplug the power cord.
  - If you continue to use without taking proper measures, electrical shock or fire can occur. Contact the service center.

- Do not drop an object on or apply impact to the product. Do not throw any toys or objects at the product screen.
  - It can cause injury to human, problem to product and damage the display.
- Do not let the product fall or drop when connecting it with an external device.
  - This may cause injury and/or damage to the product.
- When connecting it to a game device, keep a distance of four times the diagonal measurement of the screen from the device.
  - If the product falls because of the short cable, this may cause injury and/or damage to the product.
- Leaving a fixed image on the screen for a long time may cause damage to the screen and cause image retention. To use the product for a long period of time, use a screen saver on the PC or utilize the residual image prevention function on the product, and when the product is not used, turn off the power. Image retention and related problems are not covered by the warranty on this product.
- Do NOT install this product on a wall where there is high risk of exposure to oil fumes or mist.
  - This may damage product and cause it to fall.

⚠ CAUTION

- Make sure the product ventilation holes are not blocked. Install the product in a suitably wide place (more than 100 mm from the wall).
  - If you install the product too close to the wall, it may be deformed or fire can break out due to internal heat.
- Do not block the ventilation hole of the product by a tablecloth or curtain.
  - The product can be deformed or fire can break out due to overheating inside the product.
- Install the product on a flat and stable place that has no risk of dropping the product.
  - If the product is dropped, you may be injured or the product may be broken.
- Install the product where no EMI occurs.
- Keep the product away from direct sunlight.
  - The product can be damaged.
- If you install the product in a place that does not meet the recommended conditions, this may cause serious damage to the product's picture quality, life cycle, and appearance. Please check with LG or a qualified installer before installing. This caution applies to a place where there is an abundance of fine dust or oil mist, chemical substances are used, the temperature is very high or low, the humidity is very high, or the product is likely to remain turned on for a long period of time (airport and train station). Failure to do so will invalidate the warranty.
- Do not install the product in an area with poor ventilation (e.g.on a bookshelf, in a closet) or outside and avoid placing on cushions or carpets.
- In addition, do not install it where there are heating objects such as lighting equipment.

Precautions to the AC Adapter and Electrical Power

WARNING

- If water or any foreign substance goes inside the product (TV, monitor, power cord, or AC adapter), disconnect the power cord immediately and contact the service center.
  - Otherwise, this may cause a fire or electric shock due to damage to the product.
- Do not touch the power plug or AC adapter with wet hands. If the pins of the plug are wet or dusty, wipe and dry them before use.
  - Otherwise, this may cause a fire or electric shock.
- Make sure to completely insert the power cord into the AC adapter.
  - If loosely connected, the poor connection may cause a fire or electric shock.
- Be sure to use power cords and AC adapters provided or approved by LG Electronics, Inc.
  - The use of non-approved products may cause a fire or electric shock.
- When unplugging the power cord, always pull it by the plug. Do not bend the power cord with excessive force.
  - The power line can be damaged, which may cause electric shock or fire.
- Be careful not to step or place heavy objects (electronic appliances, clothing, etc.) on the power cord or AC adapter. Be careful not to damage the power cord or AC adapter with sharp objects.
  - Damaged power cords may cause a fire or electric shock.
- Never disassemble, repair or modify the power cord or AC adapter.
  - This may cause a fire or electric shock.
- Make sure to connect the power cable to the grounded current.
  - You may be electrocuted or injured.
- Use the rated voltage only.
  - The product can be damaged, or you may be electrocuted.
- In the presence of thunder and lightning, never touch the power cord and signal cable because it can be very dangerous.
  - It can cause electric shock.
- Do not connect several extension cords, electrical appliances, or electrical heaters to a single outlet. Use a power strip with a grounding terminal designed for exclusive use with the computer.
  - A fire can break out due to overheating.
- Do not touch the power plug with wet hands. Additionally, if the cord pin is wet or covered with dust, dry the power plug completely or wipe dust off.
  - You may be electrocuted due to excess moisture.

- If you don't intend to use the product for a long time, unplug the power cable from the product.
  - Covering dust can cause a fire, or insulation deterioration can cause electric leakage, electric shock or fire.
- Fix the power cable completely.
  - If the power cable is not fixed completely, a fire can break out.
- Do not insert a conductor (like a metal chopstick) into one end of the power cable while the other end is connected to the input terminal on the wall. Additionally, do not touch the power cable right after plugging into the wall input terminal.
  - You may be electrocuted.
- The appliance coupler is used as the disconnect device.
- Please make sure the device is installed near the wall outlet to which it is connected and that the outlet is easily accessible.
- As long as this unit is connected to the AC wall outlet, it is not disconnected from the AC power source even if the unit is turned off.

⚠ CAUTION

- Be sure to keep the outlet, AC adapter, and pins of the power plug clean from dust and etc.
  - This may cause a fire.
- Do not unplug the power cord while the product is in use.
  - Electrical shock can damage the product.
- Use only the power cord supplied with the unit. If you use another power cord, make sure that it is certified by the applicable national standards when not provided by the supplier. If the power cable is faulty in any way, please contact the manufacturer or the nearest authorized repair service provider for a replacement.
- Do not move the product at your own discretion.
  - This may cause stand warping, panel damage and other types of product damage.
  - Consult a professional if you wish to move the product.

Precautions In Moving the Product

WARNING

- Make sure to turn off the product.
  - You may be electrocuted or the product can be damaged.
- Make sure to remove all cables before moving the product.
  - You may be electrocuted or the product can be damaged.
- Make sure the panel faces forward and hold it with both hands to move. If you drop the product, the damaged product can cause electric shock or fire. Contact an authorized the service center for repair.
- Make sure the product is turned off, unplugged, and all cables have been removed. It may take 2 or more people to carry larger apparatus. Do not press against or put stress on the front panel of the apparatus.

CAUTION

- Do not shock the product when moving it.
  - You may be electrocuted or the product can be damaged.
- Do not dispose the product-packing box. Use it when you move.

Precautions In Using the Product

WARNING

- Do not disassemble, repair or modify the product at your own discretion.
  - Fire or electric shock accident can occur.
  - Contact the service center for check, calibration or repair.
- When the display is to be left unattended for an extended period of time, unplug it from the wall outlet.
- Keep the product away from water.
  - Fire or electric shock accident can occur.
- Do not shock or scratch the front and sides of the screen with metallic objects.
  - Otherwise, it may cause damage to the screen.
- Avoid high temperatures and humidity.

CAUTION

- Do not put or store inflammable substances near the product.
  - There is a danger of explosion or fire due to careless handling of the inflammable substances.
- When cleaning the product, unplug the power cord and scrub gently with a soft cloth to prevent scratching. Do not clean with a wet cloth or spray water or other liquids directly onto the product. An electric shock may occur. (Do not use chemicals such as benzene, paint thinners, or alcohol.)
- Take a rest from time to time to protect your vision.
- Keep the product clean at all times.
- Take a comfortable and natural position when working with a product to relax the muscles.
- Take a regular break when working with a product for a long time.
- Do not press strongly upon the panel with a hand or sharp object such as nail, pencil, or pen, or make a scratch on it.
- Keep the proper distance from the product.
  - Your vision may be impaired if you look at the product too closely.
- Set the appropriate resolution and clock by referring to the User's Guide.
  - Your vision can be impaired.
- Use authorized detergent only when cleaning the product. (Do not use benzene, thinner, or alcohol.)
  - Product can be deformed.
- Do not expose to dripping or splashing and do not place objects filled with liquids, such as vases, cups, etc. on or over the apparatus (e.g. on shelves above the unit).
- Batteries should not be exposed to excessive heat. For example, keep away from direct sunlight, open fireplace, and electric heaters.
- Do NOT place non-rechargeable batteries in charging device.
- Using headsets (earphones) for a long time or listening loudly can cause damage to your hearing.

- Spray water onto a soft cloth 2 to 4 times, and use it to clean the front frame; wipe in one direction only. Too much moisture may cause staining.

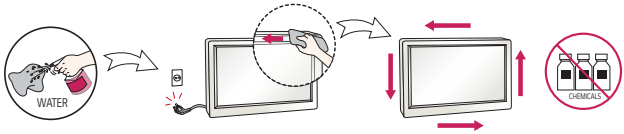

- Do not use products using high voltage around the Monitor. (e.g., a bug zapper)
  - Monitor may have malfunction as its electrical shock.

Mounting on a Wall

- Do NOT install this product by yourself as you may injure yourself or cause damage to product. Please contact service personnel authorised by manufacturer.

LICENSES

Supported licenses may differ by model. For more information of the licenses, visit *www.lg.com*.

HDMI™
HIGH-DEFINITION MULTIMEDIA INTERFACE

The terms HDMI, HDMI High-Definition Multimedia Interface, HDMI trade dress and the HDMI Logos are trademarks or registered trademarks of HDMI Licensing Administrator, Inc.

Manufactured under license from Dolby Laboratories. Dolby, Dolby Vision, Dolby Vision IQ, Dolby Audio, Dolby Atmos, and the double-D symbol are trademarks of Dolby Laboratories Licensing Corporation.

For DTS patents, see *http://patents.dts.com*. Manufactured under license from DTS Licensing Limited. DTS, the Symbol, & DTS and the Symbol together, DTS 2.0 Channel, DTS 2.0+Digital Out, DTS-HD, and DTS Virtual:X are registered trademarks or trademarks of DTS, Inc. in the United States and/or other countries. © DTS, Inc. All Rights Reserved.

HEVC Advance™
Covered by patents at patentlist.accessadvance.com

ASSEMBLY AND PREPARATION

CAUTION

- Always use genuine components to ensure safety and product performance.
- The product warranty will not cover damage or injury caused by the use of counterfeit components.
- Connect the power cord to the product before you plug it into a wall outlet. Plugging the power cord into a wall outlet first may cause an electric shock, which can also damage the product.
- This product can only be used in a state in which the Signage Box and FFC cable are not exposed.

NOTE

- The accessories provided with your product may vary depending on the model or region.
- Product specifications or contents in this manual may be changed without prior notice due to upgrade of product functions.
- SuperSign Software & Manual
  - Downloading from the LG Electronics website.
  - Visit the LG Electronics website *http://partner.lge.com* and download the latest software for your model.
- The warranty will not cover any damage caused by using the product in an excessively dusty environment.

WARNING

- The product warranty does not cover any electrostatic damage to parts that may occur during product installation. Wear the appropriate gear that can prevent electrostatic discharge (ESD) when installing the product.
- The serial number on the panel and that on the signage box must match. If they do not, spots may appear on the screen or the product may not function properly.

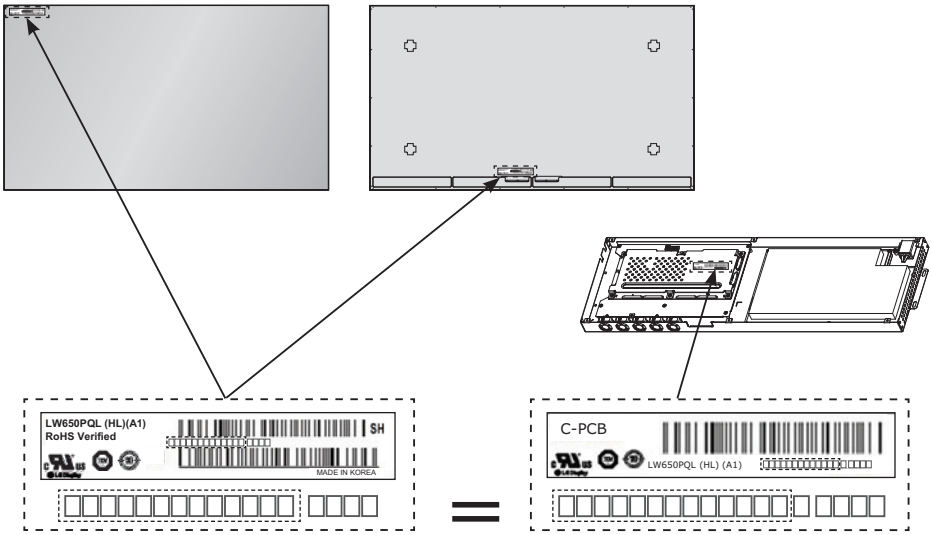

Optional Accessories

Without prior notice, optional accessories are subject to change to improve the performance of the product, and new accessories may be added. The illustrations in this manual may differ from the actual product and accessories.

Wi-Fi Dongle kit
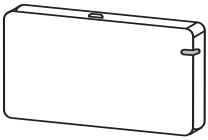
AN-WF500

CAUTION

- If you connect to a wireless LAN during wired LAN use, the network may temporarily disconnect.

NOTE

- Optional accessories are available for some models. If necessary, please purchase them separately.
- You can obtain additional accessories from your local retail store.

IR Receiver

This allows a remote control sensor to be placed in a custom location. Then that display can control other displays via an RS-232C cable.

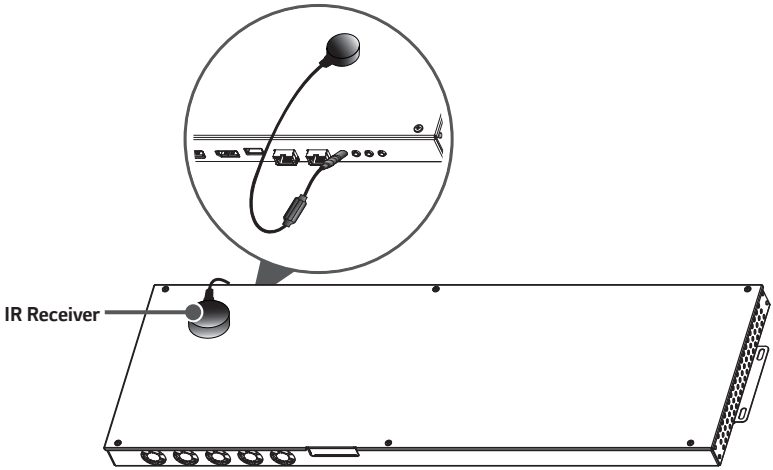

Installing on a Wall

To install the monitor on a wall, fasten it using the screws included with the product. Ensure that there is at least 100 mm of space on each side for ventilation.

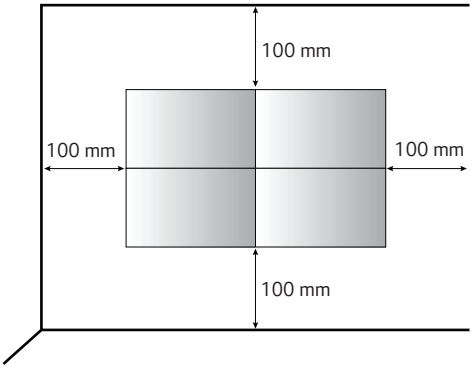

CAUTION

- Disconnect the power cord before moving or installing the monitor to avoid risk of electric shock.
- If you install the monitor on a ceiling or slanted wall, it may fall and result in injury. Use the screws and wall mount brackets provided, and consult a retailer or a professional installation company near you.
- To prevent injury, this apparatus must be securely attached to the wall in accordance with the installation instructions. (This pertains only to Australia and New Zealand.)

NOTE

- Do not install the product in a place with no ventilation (e.g., on a bookshelf or in a closet) or on a carpet or cushion. If there is no other option but to mount the product on the wall, make sure that sufficient ventilation is provided before installation.
  - Failure to do so may result in a fire due to the increase in the internal temperature.
- The illustration shows a general example of installation and may look different from the actual product.

Securing the monitor to a wall (optional)

WARNING

- If the monitor is not positioned in a sufficiently stable location, there is a danger that it will fall. Many injuries can be avoided by taking the following simple precautions.
  - Only using furniture that can safely support the monitor.
  - Ensuring the monitor is not overhanging the edge of the supporting furniture.
  - Not placing the monitor on tall furniture (for example, cupboards or bookcases) without anchoring both the furniture and the monitor to a suitable support.
  - Not placing cloth or other materials between the monitor and supporting furniture.
  - Educating children about the dangers of climbing on furniture to reach the monitor or its controls.
  - Install the product on a wall on which anchor bolts can be fixed.
  - Install the product where it can be safely supported. (On concrete, plywood, MDF, etc.)
  - Installing the product on a plaster wall may cause the wall to collapse.

CAUTION

- Do not climb or hang on the product.

NOTE

Connecting the LC (Luminance Compensation) Cable

Basic Connection Diagram of the LC (Luminance Compensation) Cable

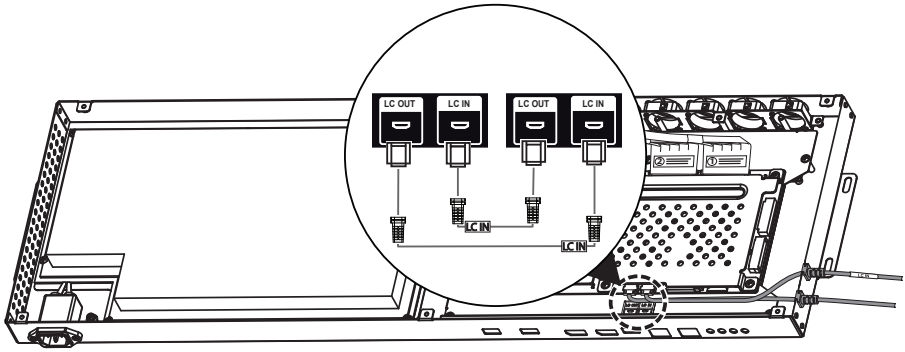

NOTE

- Connect the port with an attached label to LC IN.
- If not properly connected, the LC (Luminance Compensation) function does not operate as intended.
- The LC function will not operate normally if you use a cable other than the one provided.
  - Make sure that you use the cable provided exclusively for LC.
- Refer to ESG for a detailed LC (Luminance Compensation) connection diagram.

Setting

- A unique Set ID should be designated to each set without being duplicated.
- The LC cable should be connected in the closed loop. Please refer to the ESG for the connection method.

Tiling Displays

How to Mount the Set

Example of 2 x 2 Tiling

When installing Tiling, start from the displays at the bottom.

Landscape

1 Attach the Wall Fixer Guide on the wall.
2 Fix the four wall fixers on the holes of the Wall Fixer Guide (by tightening 8 screws).
3 After fixing the wall fixers, remove the Wall Fixer Guide.
4 Slide the display from top to down direction to secure it.

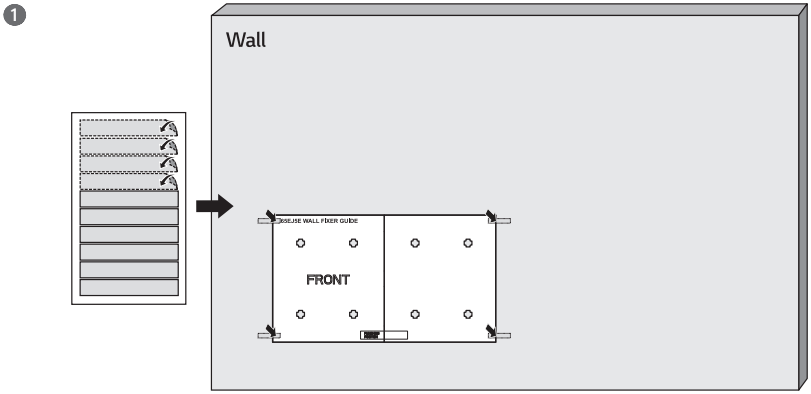

❷

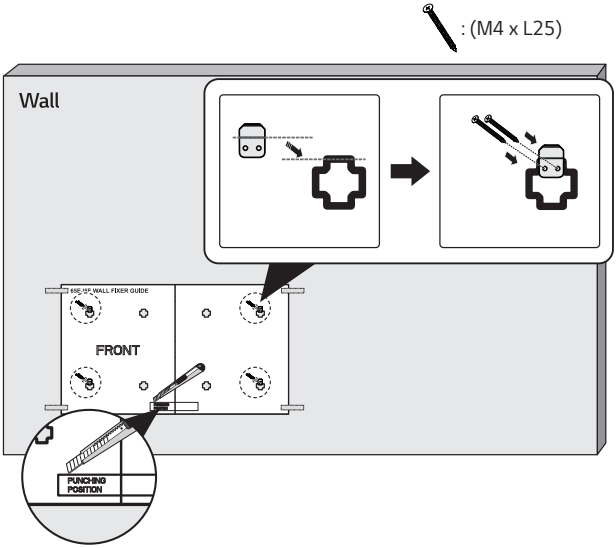
: (M4 x L25)
Wall
65E-5F WALL FIXER GUIDE
FRONT
PUNCHING POSITION

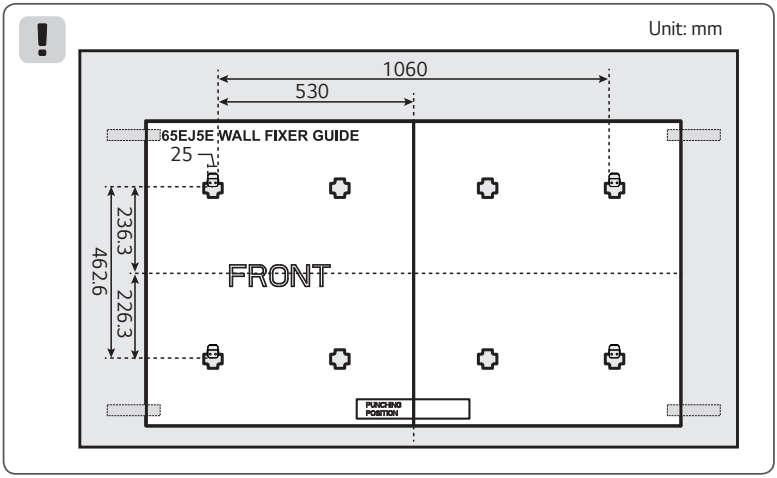
Unit: mm
1060
530
65EJ5E WALL FIXER GUIDE
25
236.3
462.6
226.3
FRONT
PUNCHING POSITION

❸

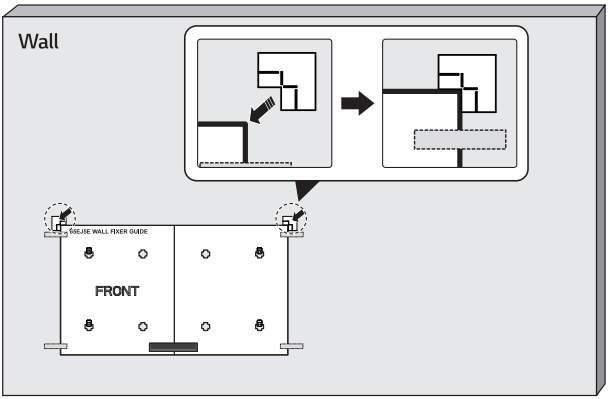
Wall
SSEJSE WALL FIXER GUIDE
FRONT

❹

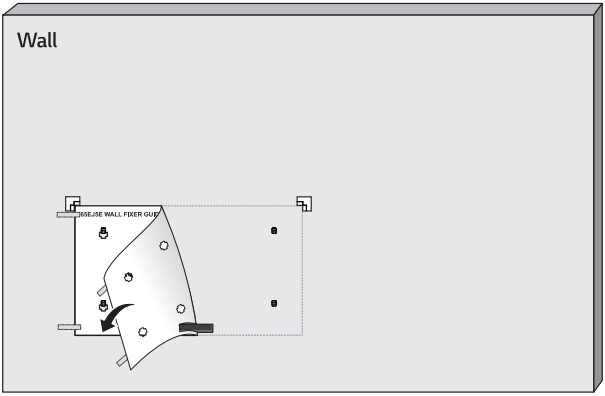
Wall
SSEJSE WALL FIXER GUIDE

❺

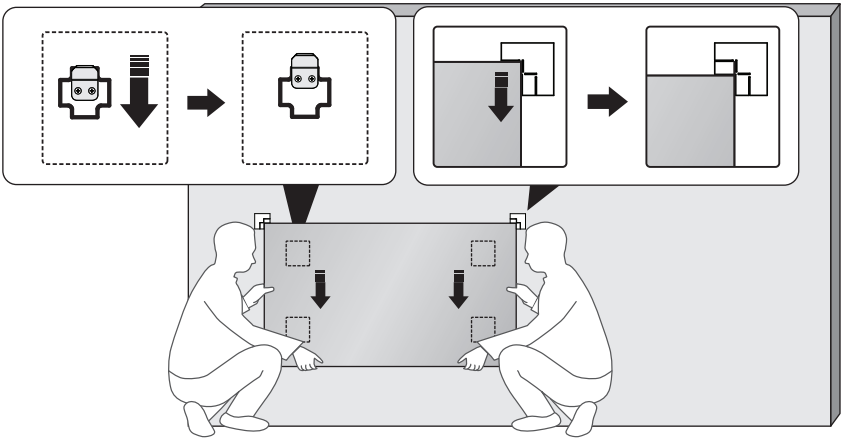

6

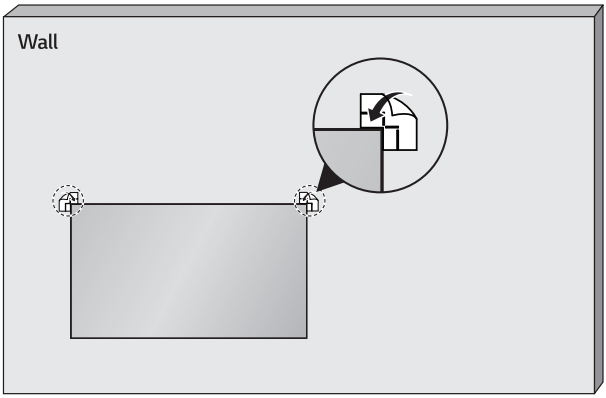

7

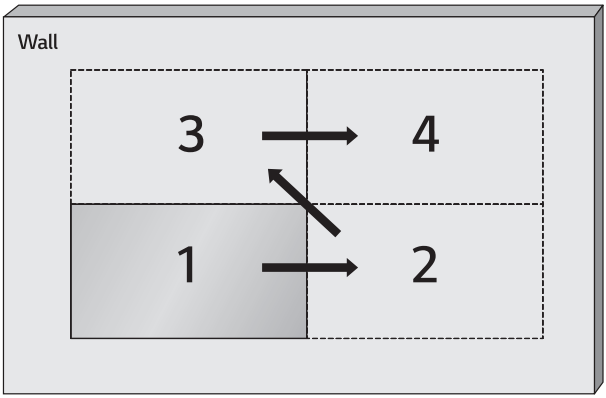

8

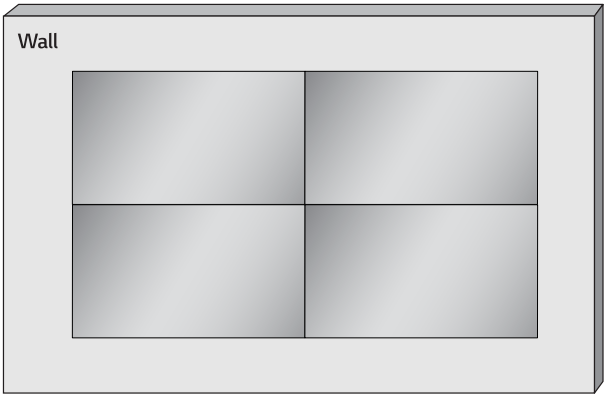

Portrait

1 Attach the Wall Fixer Guide on the wall.
2 Fix the four wall fixers on the holes of the Wall Fixer Guide (by tightening 8 screws).
3 After fixing the wall fixers, remove the Wall Fixer Guide.
4 Slide the display from top to down direction to secure it.

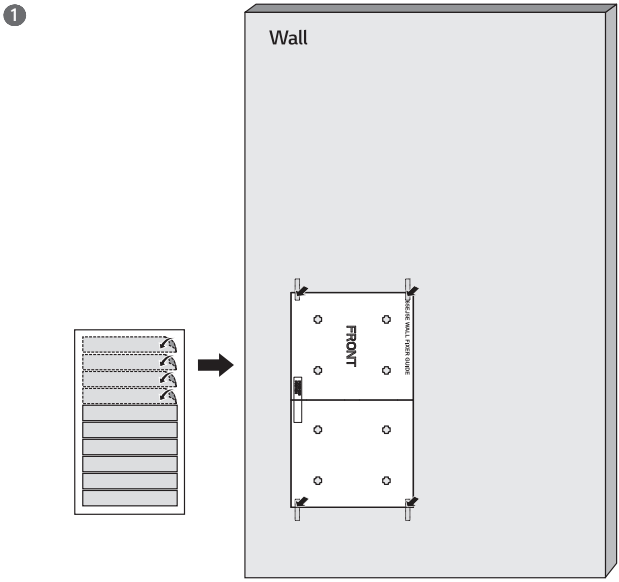

❷

: (M4 x L25)

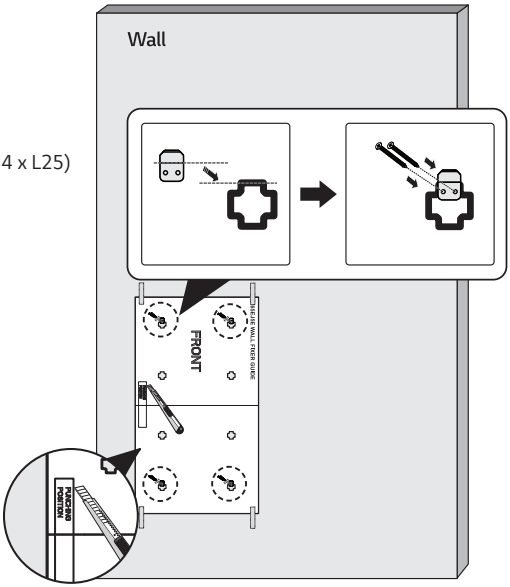
Wall
65EJ5B WALL FIXER GUIDE
FRONT
PUNCHING PORTION

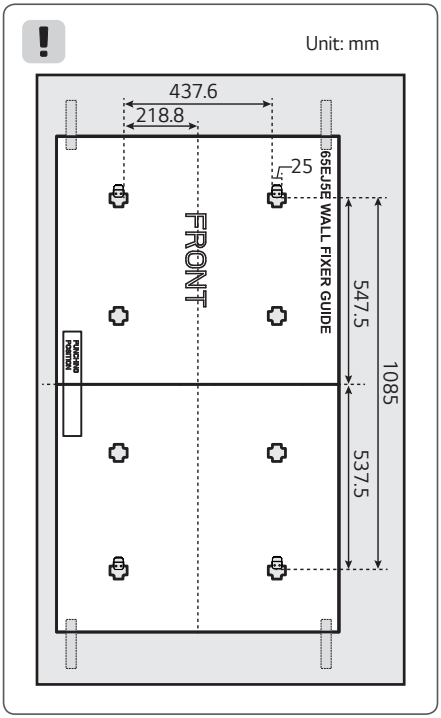
Unit: mm
437.6
218.8
25
65EJ5B WALL FIXER GUIDE
FRONT
547.5
1085
537.5
PUNCHING PORTION

3

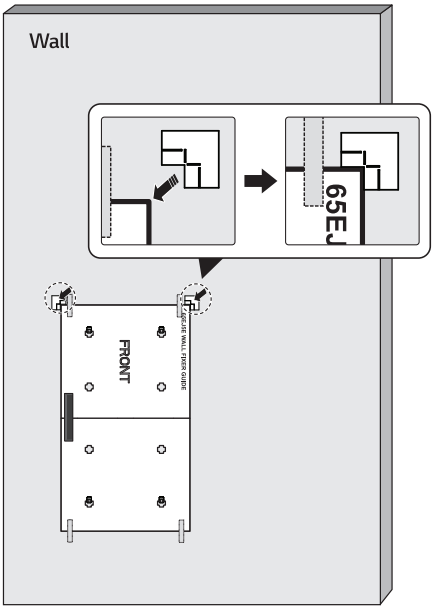

4

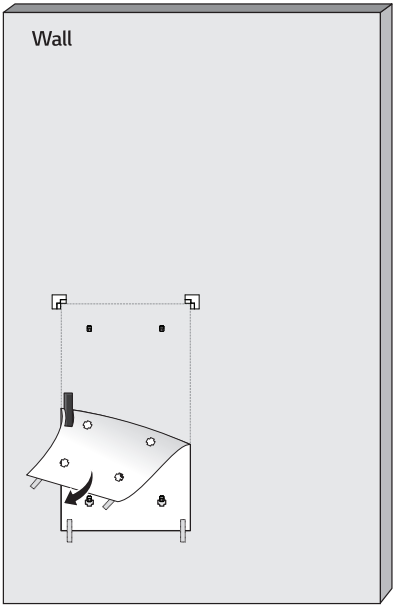

5

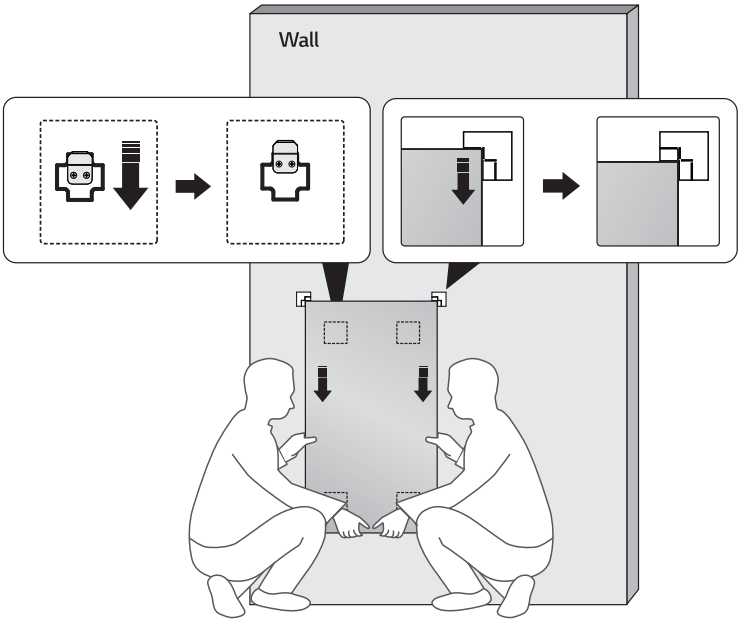

6

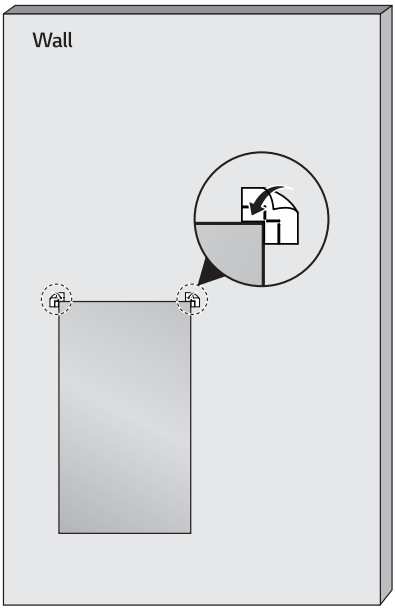

7

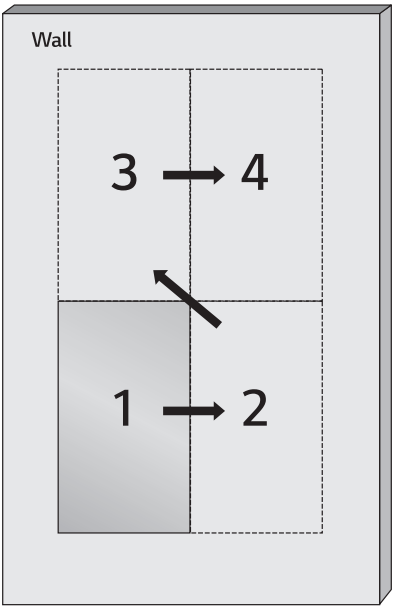

8

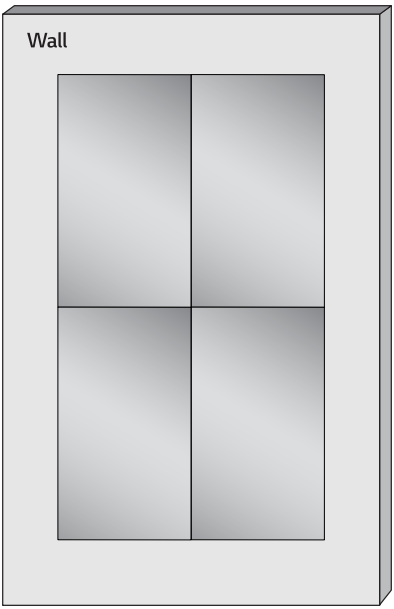

REMOTE CONTROL

The descriptions in this manual are based on the buttons on the remote control. Please read this manual carefully to use the monitor correctly. To install batteries, open the battery cover, place batteries (1.5 V AAA) matching ⊕ and ⊖ terminals to the labels inside the compartment, and close the battery cover. To remove the batteries, perform the installation actions in reverse. The illustrations may differ from the actual accessories.

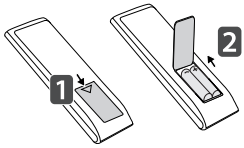

⚠ CAUTION

- Do not mix old and new batteries, as this may damage the remote control.
- Ensure the remote control is always pointed toward the monitor's IR receiver.
- Some features of the remote control may not be supported in certain models.

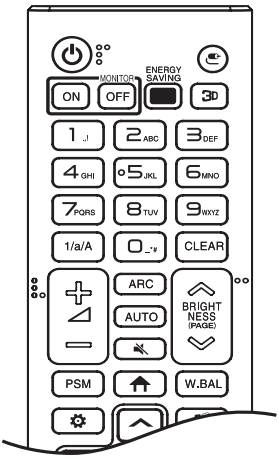

⏻ **(POWER)** Turns the monitor on or off.

MONITOR ON Turns the monitor on.

MONITOR OFF Turns the monitor off.

ENERGY SAVING Adjusts the brightness of the picture to reduce energy consumption.

(INPUT) Selects the input mode.

3D Used for viewing 3D videos.

1/a/A Toggles between numerical and alphabetical.

Number and Alphabet buttons

Enters numerical or alphabetical characters depending upon the setting.

CLEAR Deletes the entered numerical or alphabetical character.

Volume Up/Down Button Adjusts the volume.

ARC Selects the Aspect Ratio mode.

AUTO Automatically adjusts picture position and minimizes image instability (available for RGB input only).

(MUTE) Mutes all sounds.

BRIGHTNESS Adjusts the brightness of the display. PAGE function is not supported in this model.

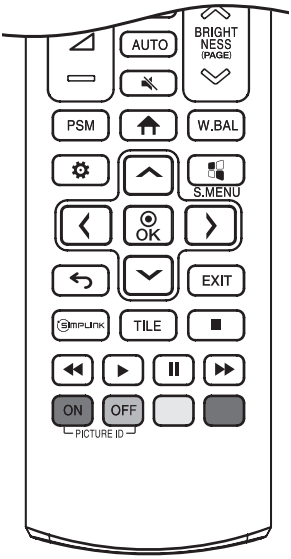

PSM Selects the Picture Mode.

(HOME) Activates the Launcher.

W.BAL Enters the White Balance menu.

(SETTINGS) Accesses the main menus or saves your input and exit menus.

S.MENU SuperSign menu key.

Navigation Buttons Scrolls through menus or options.

OK Selects menus or options and confirms your input.

(BACK) Allows you to move back one step in the user interaction function.

EXIT Quit all OSD tasks and applications.

SIMPLINK Allows you to control various multimedia devices to enjoy multimedia simply by using the remote control through the SimpLink menu.

TILE Selects the TILE Mode.

PICTURE ID ON/OFF When the Picture ID number matches the Set ID number, you can control whichever monitor you want in multi-display format.

USB Menu Control Buttons Controls media playback.

Trick key May not be supported on some models.

MAKING CONNECTIONS

You can connect various external devices to your monitor. Change the input mode and select the external device you want to connect. For more information about external device connections, see the user manual provided with each device.

Connecting to a PC

Some of the cables are not provided. This monitor supports the Plug and Play* feature.

* Plug and Play: a feature that enables a PC to recognize devices attached by the user without device configuration or user intervention when powering up.

External Device Connection

Some of the cables are not provided. Connect a HD receiver, DVD, or VCR player to the monitor and select an appropriate input mode.

For the best picture and sound quality, connecting external devices to your monitor using HDMI cables is recommended.

NOTE

- For the best image quality, using the monitor with HDMI connection is recommended.
- To comply with the specifications of the product, use a shielded interface cable with ferrite core, such as a HDMI cable.
- If you turn the monitor on when the set is cold, the screen may flicker. This is normal.
- Sometimes red, green, or blue spots may appear on the screen. This is normal.
- Use a High Speed HDMI®/™ cable (shorter than 3 meters).
- Use a certified cable with the HDMI logo attached. If you do not use a certified HDMI cable, the screen may not display or a connection error may occur.
- Recommended HDMI Cable Types
  - High Speed HDMI®/™ Cable
  - High Speed HDMI®/™ Cable with Ethernet
- If you cannot hear any sound in HDMI mode please check your PC settings. Some PCs require you to manually change the default audio output to HDMI.
- If you want to use HDMI-PC mode, you must set your PC/DTV to PC mode.
- You may experience compatibility issues if you use HDMI-PC mode.
- Make sure the power cable is disconnected.
- If you connect a gaming device to the monitor, use the cable provided with the gaming device.

CAUTION

- Connect the signal input cable and tighten it by turning the screws clockwise.
- Do not press the screen with your finger for a prolonged period as this may result in temporary distortion on the screen.
- Avoid displaying static images on the screen for a long period of time to prevent image retention. Use a screensaver if possible.
- A wireless communication device near your monitor can affect the image.

Using the Input List

(Home) →

- HDMI → DISPLAYPORT

Connecting Multiple Monitors

To use multiple monitors connected to each other, connect the end of the signal input cable (DP cable) to the DP OUT connection in one monitor and connect the other end to the DP IN connection of the other monitor.

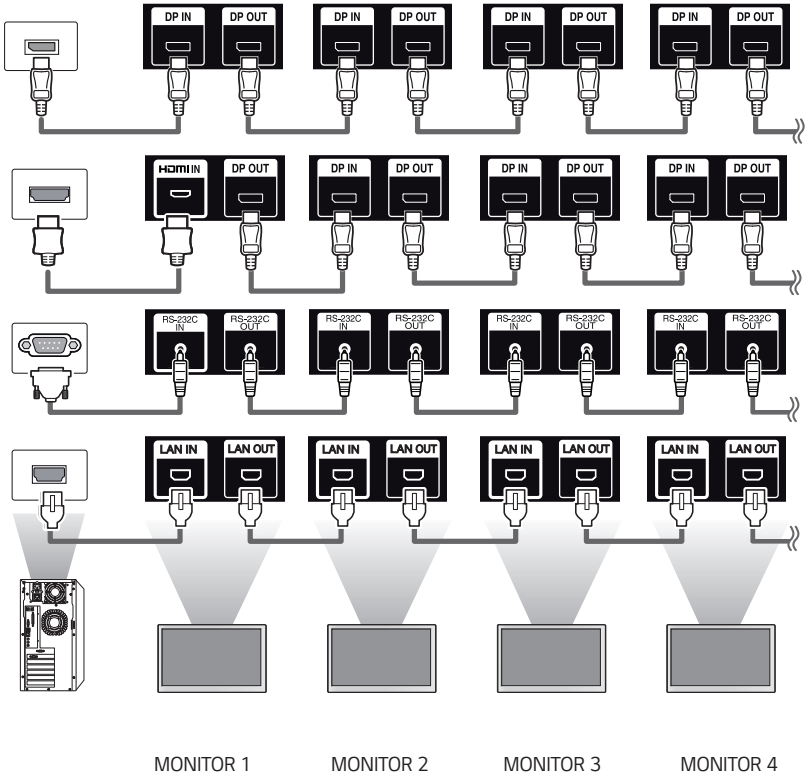

NOTE

- Daisy chaining the video output may be limited depending on the performance of the input device that supports HDCP.

WARNING

- The serial number on the panel and that on the signage box must match. If they do not, spots may appear on the screen or the product may not function properly.

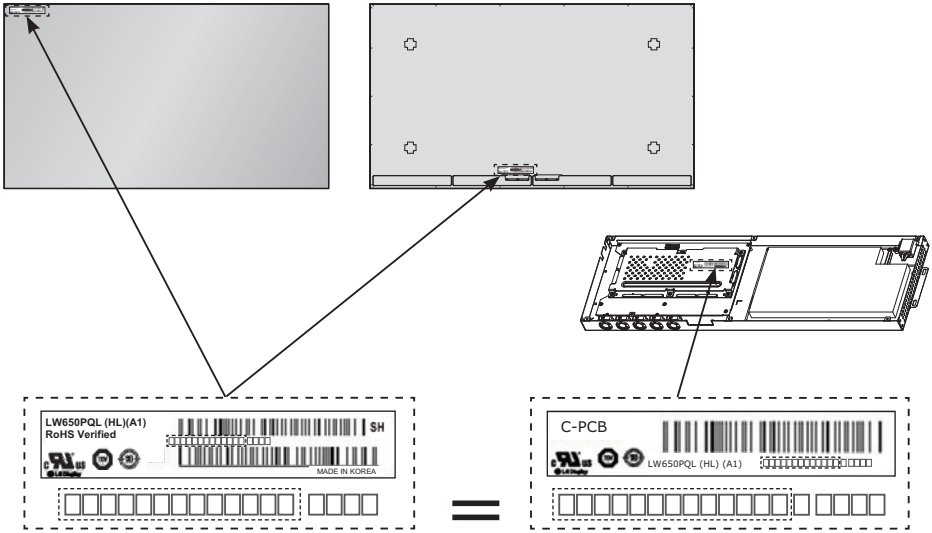

TROUBLESHOOTING

No image is displayed.

Problem	Action
Is the product power cord connected?	• Check if the power cord is correctly plugged into the power outlet.
Is the FFC cable properly connected?	• Make sure the FFC cable is properly connected between the cable coming out of the panel and signage box.
Does the “Invalid Format” message appear?	• The signal from the PC (Graphics card) is out of the vertical or horizontal frequency range of the product. Adjust the frequency range by referring to the Specifications in this manual.
Does the “No Signal” message appear?	• The signal cable between PC and product is not connected. Check the signal cable. • Access the input menu to check the input signal.

The “Unknown Product” message appears when the product is connected.

Problem	Action
Did you install the driver?	• Check if the Plug and Play function is supported by referring to the graphics card user manual.

The screen image looks abnormal.

Problem	Action
Is the screen position wrong?	• Check if the graphics card resolution and frequency are supported by the product. If the frequency is out of range, set to the recommended resolution in the (Control Panel → Display → Setting) menu. (The settings may differ depending on your operating system.)
The screen is displayed abnormally.	• The proper input signal is not connected to the signal port. Connect the signal cable that matches with the source input signal. • The OLED panel and Signage box are not properly connected. Check their serial numbers and make sure they match. Once the serial numbers are matched, unplug the power cord then reconnect it to run the [Clear Panel Noise] function. (The product will reboot automatically after it runs.) You can also run the function in ⚙ (Settings) → [Display] → [Advanced Settings] → [OLED Panel Settings] → [Clear Panel Noise].

The audio function does not work.

Problem	Action
No sound?	• See if the audio cable is connected properly. • See if the sound is set properly.
Sound is too dull.	• Select the appropriate equalizer sound.

Screen color is abnormal.

Problem	Action
Screen has poor color resolution (16 colors).	• Set the number of colors to more than 24 bits (true color). Select (Control Panel → Display → Settings → Color Table) in Windows. (The settings may differ depending on your operating system.)
Screen color is unstable or mono-colored.	• Check the connection status of the signal cable. Or, re-insert the PC graphics card.
Do black spots appear on the screen?	• Several pixels (red, green, white, blue, or black color) may appear on the screen, which can be attributable to the unique characteristics of the OLED panel. This is not a malfunction of the OLED.

The operation does not work normally.

Problem	Action
The power suddenly turned off.	• Is the Timer set? • Check the power control settings. Power interrupted. • Are the fans functioning properly? - View the fan status in HOME → [Information] → [Fan Status].

⚠ CAUTION

- Image sticking may occur when displaying a fixed image for an extended period of time. It is recommended that you display videos for 12 hours or less per day to decrease the likelihood of image sticking.
- A few horizontal lines may appear on the screens while running the Clear Panel Noise feature (OFF-RS). This is normal, so there is no need for concern. If the power is turned on or a power failure occurs while the Clear Panel Noise feature (OFF-RS) is running, the feature may not work properly. Turn the power on five minutes after running the Clear Panel Noise feature. The external speakers connected to the product may make a sound while you are running the Clear Panel Noise feature (OFF-RS).
- OFF-RS: Removes image sticking through TFT degradation compensation. Runs after 4 hours of use.

  JB: Removes image sticking through OLED degradation compensation. Runs after 2000 hours of use.

PRODUCT SPECIFICATIONS

The product specifications below may be changed without prior notice due to upgrade of product functions.
" ~ " refers to alternating current (AC), and " ⎓ " refers to direct current (DC).

OLED screen	Screen type	Thin Film Transistor (TFT) OLED Screen
Operating conditions	Daily usage	12 hours (video)
Video signal	Maximum resolution	HDMI / DisplayPort: 3840 x 2160 @ 60 Hz - This may not be supported on some OS or graphics card types.
	Recommended resolution	HDMI / DisplayPort: 3840 x 2160 @ 60Hz - This may not be supported on some OS or graphics card types.
	Horizontal frequency	HDMI/ DisplayPort: 30 kHz to 83 kHz
	Vertical frequency	HDMI/ DisplayPort: 50 Hz to 60 Hz
	Synchronization	Separate Sync/Digital
Input/ Output ports	USB 2.0 IN1/2, HDMI IN, DP IN/OUT, LAN IN/OUT, IR IN, RS-232C IN/OUT, AUDIO OUT	
Embedded battery		Applied
Environmental Conditions	Operating Temperature	0 °C to 40 °C
	Operating Humidity	10 % to 80 %
	Storage Temperature	-20 °C to 60 °C
	Storage Humidity	5 % to 85 %
OLED Panel	Pixel Pitch	0.372 mm (H) X 0.372 mm (V)
Power	Rated Voltage	AC 100-240 V ~ 50/60 Hz 4.9 A
	Power Consumption	On Mode: 440 W (Typ.) Sleep Mode: ≤ 0.5 W Standby Mode: ≤ 0.5 W
Dimensions (Width x Height x Depth) / Weight	Display	1445.1 mm x 822.6 mm x 6.0 mm / 9.9 kg
	Signage Box	782.8 mm x 239.0 mm x 35.5 mm / 3.6 kg

Display

[Unit: mm]

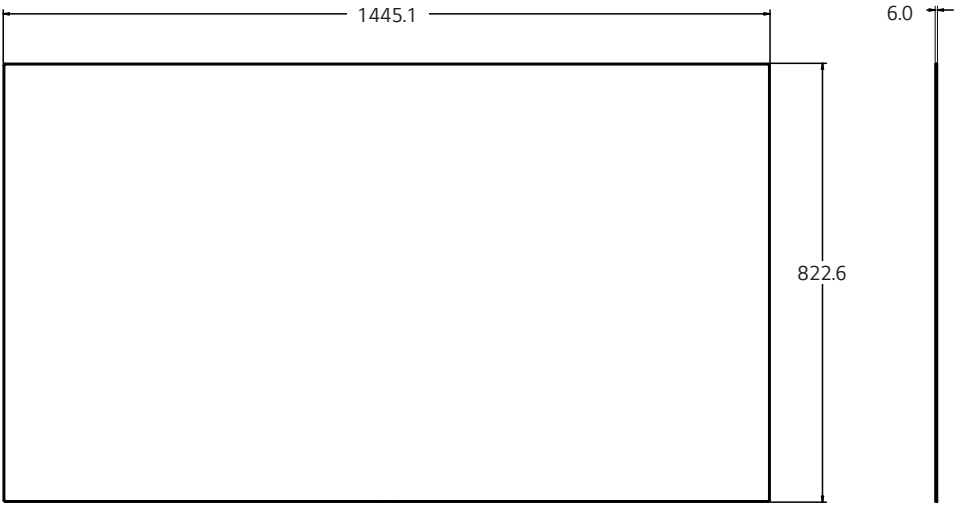

Signage Box

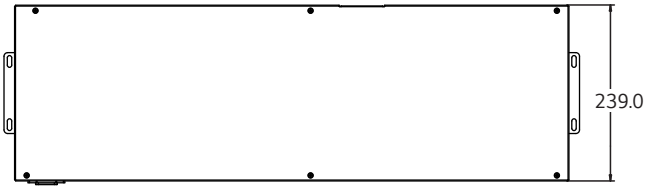

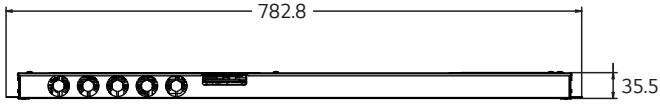

HDMI/ DisplayPort (PC) Support mode

Resolution	Horizontal frequency (kHz)	Vertical frequency (Hz)
800 x 600	37.879	60.317
1024 x 768	48.363	60.0
1280 x 720	44.772	59.855
1366 x 768	47.7	60
1280 x 1024	63.981	60.02
1680 x 1050	65.290	59.954
1920 x 1080	67.5	60
3840 x 2160	67.5	30
	135	60

HDMI/ DisplayPort (DTV) Support Mode

Resolution	Horizontal frequency (kHz)	Vertical frequency (Hz)
480/60p	31.5	60
576/50p	31.25	50
720/50p	37.5	50
720/60p	45	60
1080/50i	28.1	50
1080/60i	33.75	60
1080/50p	56.25	50
1080/60p	67.432	59.94
1080/60p	67.5	60
2160/30p	67.5	30
2160/50p	112.5	50
2160/60p	135	60

NOTE

- Resolutions available for the Input Label option in HDMI/ DisplayPort input modes.
  - PC resolutions: 1280 x 720 / 60 Hz, 1920 x 1080 / 60 Hz, 3840 x 2160 / 60 Hz
  - DTV resolutions: 480p, 720p, 1080p and 2160p
- Vertical frequency: The product display functions by the screen image changing dozens of times every second like a fluorescent lamp. The vertical frequency or refresh rate is the number of image displays per second. The unit is Hz.
- Horizontal frequency: The horizontal interval is the time taken to display one horizontal line. When 1 is divided by the horizontal interval, the number of horizontal lines displayed every second can be tabulated as the horizontal frequency. The unit is kHz.

Make sure to read the Safety Precautions before using the product.

The model and serial numbers of the SET are located on the back and one side of the SET. Record it below should you ever need service.

MODEL _____

SERIAL _____

Temporary noise is normal when powering ON or OFF this device.