OWNER'S MANUAL

LG KIOSK

Please read the user manual before using this product to ensure safe and convenient use.

27KC3P-MW

MFL05834101
(2509-REV00)

www.lg.com

Copyright © 2025 LG Electronics Inc. All Rights Reserved.

TABLE OF CONTENTS

SAFETY INSTRUCTIONS 3

- Safety Notes for Power and AC Adaptors 4
- Precautions When Moving the Product 6
- Installation Precautions 7
- Precautions When Cleaning Product 9
- Precautions When Using Product 10
- Screen Afterimage Cautions 11
- Cautions When Disposing of the Product 11

ASSEMBLING AND PREPARING 12

- Checking the Accessories 12
- Kiosk Module Location and Name 13
- Check Before Installing the Product (User Installation Guide) 15
- Using the Touch Monitor 17
- Shutting Down the System / Turning Off the PC 18

THINGS TO CHECK BEFORE REPORTING A BREAKDOWN 20

PRODUCT SPECIFICATIONS . 23

WARNING - This equipment is compliant with Class A of CISPR 32. In a residential environment this equipment may cause radio interference.

SAFETY INSTRUCTIONS

The following safety instructions are to prevent accidental damage or personal injury by guiding the users to use the product safely and correctly.

Safety instructions are categorized into 'warning' and 'caution,' as defined below.

WARNING

Indicates that the violation of instructions may cause serious injury or even death.

CAUTION

Indicates that the violation of instructions may cause slight injury or damage to the product.

WARNING

Indoor use only.

Safety Notes for Power and AC Adaptors

WARNING

- For power cords and AC adapters, use the proper product supplied by the manufacturer or an approved standard product. If you wish to use another power cord, ensure it meets the national standards. If the power cord is defective, contact the manufacturer or the nearest authorised service centre for replacement.
- Operate it from the power source (voltage, etc.) indicated in the product specifications.
  - There is a risk of fire or electric shock due to product damage. If you are unsure of the type of power supply provided at the location you wish to install, please contact a professional equipment company.
- Always connect the power cord to a grounded outlet.
  - It may result in electrical shock, injury, or product damage.
- Ensure that the power cord and AC adaptor are firmly plugged in so that the connection is not loose.
  - Poor connections can lead to fire or electric shock.
- In the presence of thunder and lightning, never touch the power cord and signal cable because it can be very dangerous.
  - Otherwise, this may result in electric shock.
- Take care not to place any heavy objects (electronics, clothing, etc.) on or step on the power cord or AC adaptor. In addition, do not bend or pull the power cord and AC adaptor with excessive force.
  - Damaged wires can cause fire or electric shock.
- Do not connect the power cord or AC adaptor to a socket if it has been damaged by a sharp object.
  - Otherwise, this may result in electric shock.
- Do not insert conductors (metal chopsticks, etc.) into the other socket while the power cord is connected to one side of the socket. In addition, do not touch the power cord immediately after it is unplugged from the socket.
  - Otherwise, this may result in electric shock.
- Do not connect multiple electrical appliances or heating devices to a multi socket. Use a dedicated multi socket with a ground terminal.
  - Overheating may result in a fire.

- If water or any foreign substance enters the product, disconnect the power cord immediately and contact the service centre.
  - Product damage may result in fire or electric shock.
- Keep the power cord and AC adaptor away from heating devices.
  - The casing of the wires may melt, causing fire or electric shock.
- Do not disassemble, repair or modify the power cord or AC adapter by yourself.
  - Otherwise, this may result in fire or electric shock.
- The main power disconnecting device is the power cord. The product should be installed near a socket for easy operation.
- If the product is connected to the AC wall power source, switching off the product will not completely cut off the AC power.
- Power consumption will be “0” only when the power cord is unplugged.
- Use the power plug for the device as a shut-off device.

⚠ CAUTION

- Wipe off any dirt on the socket, power cord pins, and AC adaptors to keep them clean.
  - Overheating caused by dust layers may result in fire or electric shock.
- Wipe off any water on the socket, power cord pins, and AC adaptors to keep them clean. Do not touch the power cord or AC adaptor if your hands are wet.
  - Otherwise, this may result in electric shock.
- Do not turn the product on or off by connecting or disconnecting the power cord. In other words, do not use the power cord as a switch.
  - This may cause an electric shock or product malfunction.
- Do not remove the power cord when the product is in use.
  - Otherwise, the product may be damaged due to electrical shock.

Precautions When Moving the Product

WARNING

- Please make sure to contact the service centre before moving the product.
  - Otherwise, it may result in electric shock or damage to the product.
- Turn off the power and make sure all connected cables are disconnected before moving the product.
  - Otherwise, it may result in electric shock or damage to the product.
- When moving the product, be careful not to apply any force and do not press the front panel.
  - Otherwise, it may result in electric shock or damage to the product.
- When moving the product, comply with the standard requirements for personnel according to weight. (25 kg or less per person, use a moving equipment if it exceeds 100 kg)
  - It may cause personal injury or product damage. Using the product after it has been dropped may result in electric shock or fire. Contact the service centre.
- Do not hold the product upside down while holding the stand alone. (Only applicable for models with a stand.)
  - It may cause damage to the product, such as stand distortion or damage to the panel.

CAUTION

- Do not throw away the product box. The product can be placed inside the box when moving it.

Installation Precautions

WARNING

- Please make sure to contact the service centre before installing the product.
  - Otherwise, it may result in electric shock or damage to the product.
- Do not drop or apply excessive force to the product. Keep the product out of reach of children. Do not throw toys or objects onto the product panel.
  - It may result in personal injury or damage to the product/panel.
- Do not place heavy objects, sit, or hang on the product.
  - If the product falls, it may cause personal injury.
- Do not touch the overheated surface of the product.
  - This can cause personal injury.
- Install the product firmly fixed on a floor, wall, etc. to prepare against external impact such as wind or an earthquake.
  - Be sure to refer to the manual provided.
- Be careful not to let children climb or hang on the product.
  - If the product falls, it may cause personal injury.
- Do not install near a heating device such as an electric stove or lighting equipment.
  - It may cause fire, electric shock, or malfunction.
- Do not install the product by yourself. Be sure to request a service personnel designated by the service centre to install the product.
- Do not install the payment module by yourself. Ask a service technician designated by the Service Centre to install the payment module using the included accessories.
- Do not install the product on a wall where it could come into contact with oil or oil mist.
  - This may damage the product and cause it to fall.
- Do not leave the power cord, signal cables, etc. in one's walking path.
  - It may result in electric shock, fire, damage to the product, or personal injury if you trip over the product.
- Do not drop the product and external devices by connecting them with a short cable.
  - It may result in personal injury or damage to the product.
- If dropped or if the case is damaged, turn off the power, disconnect the power cord, and contact the service centre.
  - Failure to take proper action may result in fire or electric shock.
- Install in a dry place free of dust and moisture. Do not use the product in any environment that exceeds the temperature or humidity limits.
  - It may cause electric shock, fire, or damage to the product.
- Install safely in a place where it can withstand the weight of the product.
  - A lack of strength may cause the product to fall.

- Take a comfortable and natural posture when handling the product to avoid straining your muscles.
- Please, install to comply with all requirements, including but not limited to, the standards, mandates, regulations, applicable laws and legal precedent of each country in terms of accessibility.
- This product is designed for indoor use (temperature: 0–40 °C, humidity: 10–80 %). Exposure to outdoor environments or installation in areas where part of the product is exposed to external elements or direct sunlight may result in malfunction or product failure. In such cases, the product will not be covered by warranty.
  - Examples of restricted environments include the following: areas where part of the product is exposed to the outdoors, or situations where the product is installed indoors but exposed to sunlight during use.

(Australia only)

- This product must be installed by a professional installer.
- After the installation of the product in the customer premises, fully remove all product packaging (including any expanded or moulded plastic packaging materials) and recycle or dispose of such packaging responsibly. Do not dispose any expanded plastic packaging in the household bin.

⚠ CAUTION

- Do not install the product in a place with electromagnetic interference.
- If the product is installed in a special place other than the normal conditions of use, serious problems may occur in image quality, lifespan, and appearance due to the influence of the surrounding environment. Please make sure to check with our service personnel before installation. Be careful of unwarranted conditions and places such as places where lots of fine dust is generated, places where lots of oil mist is generated, places where chemicals are used, places exposed to direct sunlight, places where the temperature is too high or too low, and places with high humidity when installing the product.
- Place the product a minimum distance (100 mm) away from the wall to ensure good ventilation.
  - If it is installed too closely to the wall, it may cause product damage or fire due to a rise in internal temperature.
- When the power cord is connected, make sure that the vents are not blocked by tablecloths, curtains, or other objects (such as plastic).
  - It may be deformed or fire can break out due to internal heat.
- Do not install it in a place where ventilation is not available (such as a bookcase or closet), or in a separately created outside place, or on a carpet or a cushion.
  - Fire can break out due to internal heat.
- Install the product in a flat, secure place, and in a place sufficiently strong to support it.
  - If the product falls, it may cause personal injury or product damage.
- When installing the product on a shelf or cabinet, make sure that the bottom end of the product is not protruding forward.
  - The product may fall due to unbalanced centre of gravity, which may cause personal injury or damage to the product. Be sure to use cabinets or shelves that fit your product.

Precautions When Cleaning Product

WARNING

- Always keep the product and inside of the product clean.
  - If you do not clean the product, dust will accumulate inside and may create a fire hazard or damage to the product.
- Contact the service centre for internal cleaning of the product.
  - It may result in fire, electric shock, and damage to the product.
- When cleaning the product, disconnect the power cord and wipe it gently with a soft cloth to prevent scratches.
  - Electric shock and screen damage may occur due to scratches.
- When cleaning the frame, spray water on a soft cloth 2-4 times, then slowly wipe in one direction.
  - Too much moisture can cause staining.

CAUTION

- When cleaning the product or panel, disconnect the power cord and wipe it gently with a soft cloth. Do not spray water directly on the product or wipe it with a wet mop. In particular, never use any cleaners, air fresheners, mosquito repellents, lubricants, automotive and industrial polishes, abrasives, thinners, benzene, alcohol, etc. as they may damage the product or panel.
  - This may cause a fire, electric shock, or product damage (deformation, corrosion or breakage).

Precautions When Using Product

WARNING

- Do not use the product in any environment that exceeds the temperature or humidity limits.
  - Otherwise, it may result in electric shock or damage to the product.
- If you are using the product for a long time, take occasional breaks to protect your eyesight.
  - Otherwise, your eyesight may be weakened.
- Listening to the sound loudly or using it for a long time can adversely affect your hearing.
- If water or any foreign substance goes inside the product, turn off the power, unplug the power cord and contact the service centre.
  - If used without taking appropriate measures, it may cause electric shock or fire.
- In the event that no image appears on the screen or no sound is heard, stop using the product. Immediately turn off the power, unplug the power cord and contact the service centre.
  - If used without taking appropriate measures, it may cause electric shock or fire.
- Do not apply shock to the product or the screen by dropping an object onto the product.
  - It may cause personal injury, product failure, or screen damage.
- If you smell something unusual, hear a strange noise, or see smoke coming out of the device, unplug the power cord and contact the service centre.
  - If used without taking appropriate measures, it may result in electric shock or fire.
- Never disassemble, repair, or modify the product at the user's discretion. If necessary, contact the service centre.
  - It may result in electric shock or fire.
- Do not place objects filled with liquid, such as a vase or a cup on the product to allow liquid to get inside the product.
  - Otherwise, this may result in electric shock, fire, product malfunction, or deformation.
- Do not press hard on the surface of the product with your hands or scratch it with a sharp object such as nails, pencils, or pens. And do not impact the front or sides of the screen with a hard object, such as a metal object, and do not scratch the screen.
  - Damage to the product may cause malfunction.

- Do not use high voltage products near the device. (electronic mosquito swatter, etc.)
  - Electric shock could cause the device to malfunction.
- In the event of a gas leak, never touch the socket and open windows for ventilation.
  - Otherwise, it may cause electric shock or fire.
- If the product or case is dropped and damaged, turn off the power and disconnect the power cord.
  - If used without taking appropriate measures, it may result in electric shock or fire. Contact the service centre.
- Be careful to not let children touch small accessories.
  - If swallowed by a child, consult a doctor immediately.
- Keep children away from the product. In addition, do not let them throw toys or objects onto the product screen.
  - It may cause personal injury, product failure, or screen damage.
- To shut off the power of the unit, you must disconnect all connected power cords.
- Do not use the product with the drawer open or leave the door open. If the drawer needs to be opened temporarily to change paper in the printer, etc., ensure the product does not topple.

⚠ CAUTION

- The panel of the product is a high-tech product consisting of more than millions of pixels. In some cases, unusual colour spots may appear on the screen when using the product. These inactive pixels are not product defects and do not affect the performance and reliability of the product.
- Do not store or use flammable substances near the product.
  - It may result in explosion or fire.
- Use at an appropriate distance from the product.
  - Continuous use in excessive proximity may adversely affect your eyesight.
- Set the resolution and frequency according to the product specifications.
  - It can adversely affect your eyesight.
- Take breaks when using the device for long periods to maintain your health and vision.
- Do not hold or pull the receipt with your hand when printing. Doing so may cause the receipt to become jammed.

Screen Afterimage Cautions

- Watching still images for a long time may damage the screen and cause an afterimage. Third-party products may also have this phenomenon, and damages resulting from them are not covered by the warranty.
  - Be sure to use a screen saver when using the screen for a long time.

Cautions When Disposing of the Product

- Do not dispose of this product with general household waste.
- This product must be disposed of in accordance with local authority regulations.

ASSEMBLING AND PREPARING

⚠ CAUTION

- Please refrain from using counterfeit components to ensure safety durability of the product.
- The product warranty will not cover damage or injury caused by the use of counterfeit components.
- There is no control unit in the drawer and back cover. Please be aware that it can be opened by a general user.

NOTE

- The accessories provided with your product may vary depending on the model or region.
- Product specifications or contents in this manual may be changed without prior notice due to upgrade of product functions.
- The warranty will not cover any damage caused by using the product in an excessively dusty environment.

Checking the Accessories

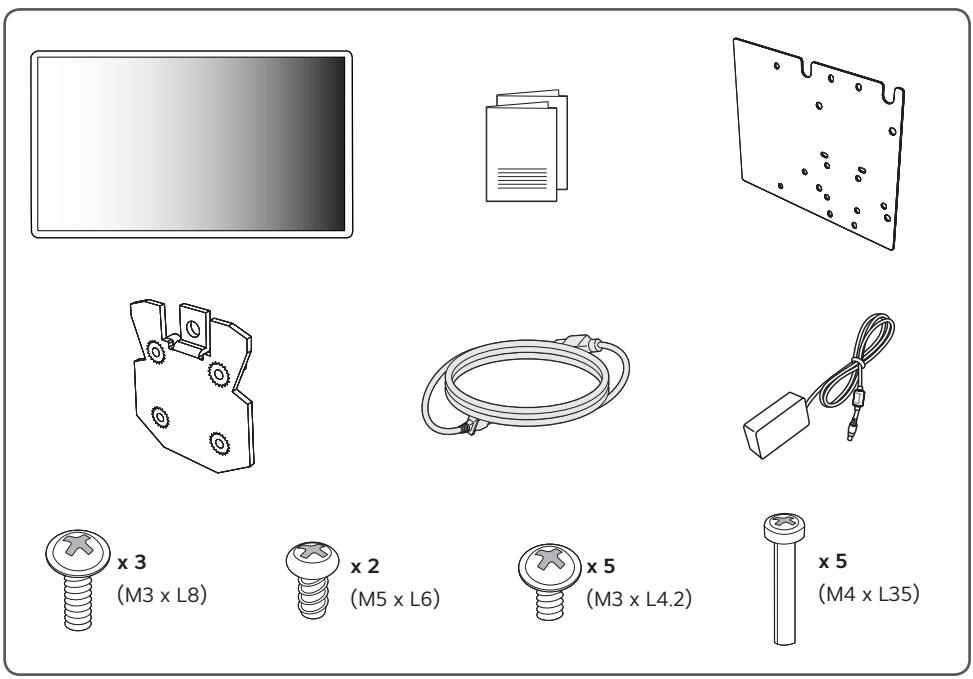

Kiosk Module Location and Name

Colour and shape may vary depending on the product, and specifications are subject to change without notice to improve performance.

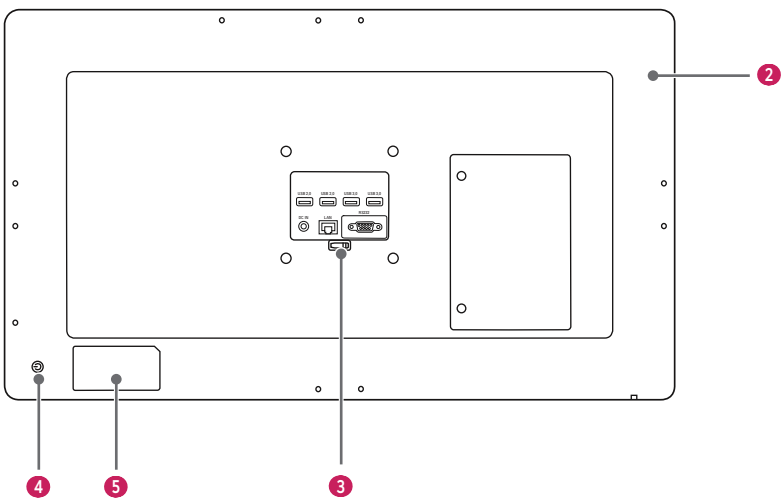

No.	Item	Explanation
1	Display	Displays the kiosk map screen.
2	Kiosk Enclosure	Mounts each module and equipment.
3	Mechanical Switch	Used to supply or cut off power to the product.
4	Power Sources	Used to turn on the product. • Press the power button briefly to turn on the product.
5	ID Label	Displays product identification information.

NOTE

- The payment module, cable, and adapter are not provided.
- Connect to the product using the cable and adapter included in the payment module.
- Remove the SSD/Memory compartment cover (secured by two screws) to upgrade the SSD or Memory for the touch PC, and then re-install the cover when the upgrade is finished.

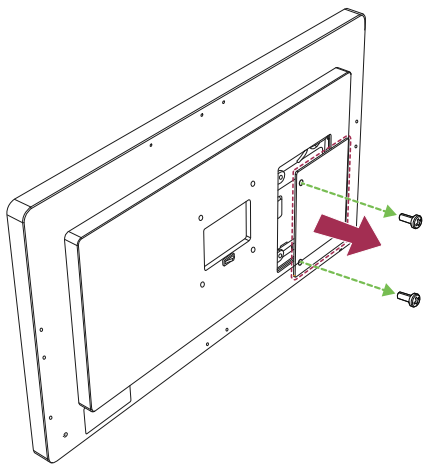

Check Before Installing the Product (User Installation Guide)

- It cannot be installed in the form of a ceiling, floor, or table.

Ventilation Requirements

- Free 100 mm of space from each side and wall for ventilation.
- For more information, contact the LG Electronics Service Centre.

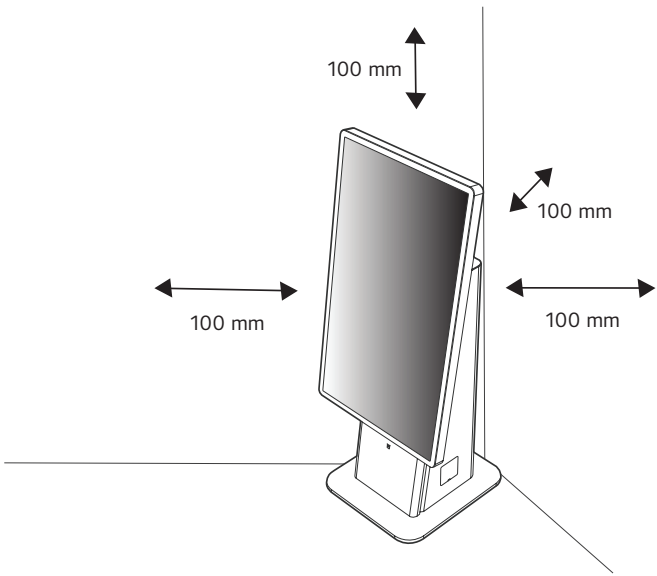

Wall Mount Holder

To install the monitor on a wall, attach a wall mount holder (optional) to the back of the monitor.

Take caution, and ensure that the wall mount holder (optional) is securely fixed to the monitor and to the wall.

The VESA dimensions of the wall mount by model are as follows.

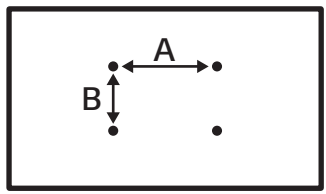

Model	VESA Dimensions (A x B) (mm)	Standard Dimensions	Length (Maximum) (mm)	Quantity
27KC3P-MW	100 x 100	M4	10	4

CAUTION

- Disconnect the power cord first, and then move or install the monitor. Otherwise, it may result in electric shock.
- If the monitor is installed on a ceiling or inclined wall, it may fall and result in injury.
- Damage to the monitor by tightening the screws too tightly may void your warranty.
- Use screws and wall mount plates conforming to VESA standards. Breakage or personal injury due to use or misuse of inappropriate components is not covered by the warranty of this product.

NOTE

- Using screws longer than the indicated depth may damage the inside of the product. Be sure to use the proper length.
- For more information on installation, please refer to the user manual for the wall mount.

Using the Touch Monitor

Touch Monitor

- The PC can be used by touching the screen as a PC input device instead of the keyboard and mouse.
- The touch screen recognises the minute current of the human body (capacitive type), so it must be touched with the tip of the finger.

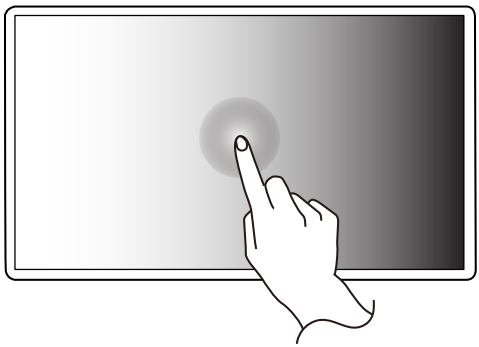

Please check before use.

- Be careful not to let electricity come into contact with the screen. Doing so may result in malfunction due to electrical stimulation, such as static electricity.
- Do not press the touch screen with your fingertip using excessive force or with a pointed object. Doing so may result in the screen becoming damaged or broken.
- The device may not work properly if you wear gloves, if your fingers are dirty, or if you touch it with your fingernails or a ballpoint pen.
- Take care as the touch sensor may not work properly if the screen is wet or has moisture.
- When using a fixed screen for an extended period of time, an after-image (screen deterioration) or smearing may occur, so the screen should be turned off when not in use.

Requirements

OS environment of PC connected to the product

- Windows 10 IoT

Shutting Down the System / Turning Off the PC

The Windows shut-down option can be used in the following ways:

- Press the ⊞ → ⏻ button and select [Shut down].

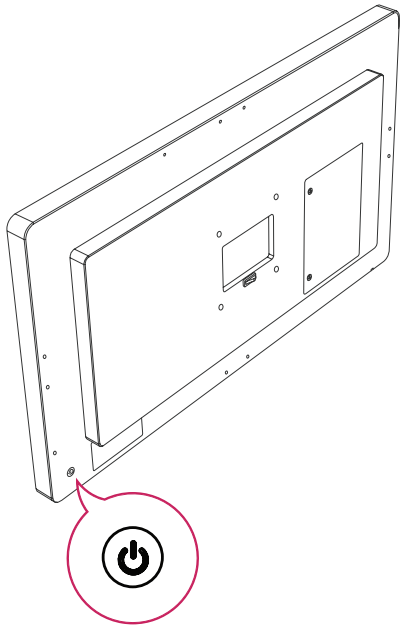

⚠ CAUTION

- Switching off incorrectly may result in product failure. (Failure to power on, blue screen, performance degradation, etc.)

  ※ Examples of switching off incorrectly include turning off the circuit breaker, turning off the extension lead, and pulling out the power plug during operation.

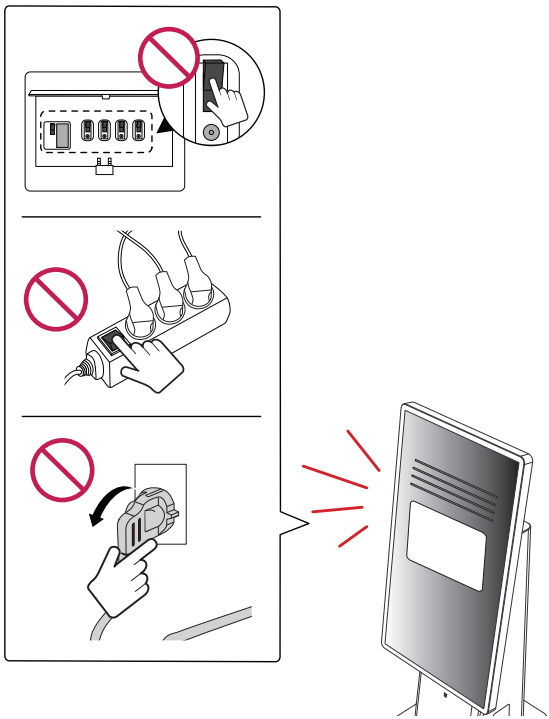

THINGS TO CHECK BEFORE REPORTING A BREAKDOWN

» Each model may have different points to check.

» For more instructions on PC settings, please refer to Windows Help.

Issues Related to Use

- The power won't turn on.
  - Check if the power cord is correctly plugged into the power outlet.
  - For models using an AC adaptor, disconnect the AC adaptor, clean the contact terminals, and turn the power on again.
- The 'Unknown Product' message appears when the product is connected.
  - Check if the PC (graphics card) driver is installed.
  - Check the user manual of the PC (graphics card) to see if the plug and play feature is supported.

Issues Related to Screen (Video)

- The position of the screen is incorrect.
  - Check if the graphics card resolution and frequency are supported. If the frequency exceeds the supported range, use PC settings to set the resolution to the recommended value.
- The screen flickers or shakes.
  - If you turn the monitor on when it is cold, the screen may flicker. This is normal.
  - Make sure that the current resolution and frequency settings of the graphics card are supported by the monitor.

Issues Related to the Screen (Colour)

- The screen resolution is low (16 colours).
  - Use PC settings to set the colour to 24 bits (True Colour) or above.
- Black spots or bright spots appear on the screen.
  - Some pixels (red, green, blue, black) are visible on the screen due to the unique characteristics of the display panel. This is not a product malfunction.
- The screen brightness looks dark.
  - Adjust the brightness and contrast.
  - The backlight needs to be repaired.

Issues Related to Sound

- The audio doesn't work.
  - Check if the audio cable is connected properly.
  - Adjust the volume of the product or external device.
  - Check if the sound is set correctly.
- The sound is too low.
  - Adjust the volume of the product or external device.

Other Issues

- The power suddenly turned off.
  - Check if the auto-off feature is on.
  - Power supply is interrupted. Check if the power cord is correctly plugged into the power outlet.
  - Check the power control settings.

Issues Related to Touch

- Touch does not work.
  - Touch does not work when the product is turned off. Check the power of the product.
  - Failure to use a grounded socket may result in disconnection or touch errors. Make sure to connect the power cord to a grounded socket.
  - Check if the product screen is displayed.
  - Disconnection or touch errors may occur during touch input, as shown below.

    When using the product only with your fingernails or fingertips

    When holding the touch pen tip or holding the pen tip close to touch input

    When inputting touch while pressing the touch pen with excessive force on the screen
- The locations of the touch point and action point differ.
  - This phenomenon occurs when the calibration of the touch screen is incorrect. Change the PC settings.
- Multi-touch does not work.
  - Multi-touch may not be supported in the content being played (Flash Player, Paint, etc.). Use content that supports multi-touch.
  - Restart the content being played (Flash Player, Paint, etc.).
  - Try restarting the PC.
  - Multi-touch may be slightly unstable in the edge areas of the touch screen.
  - If the interval between two touches is too short, a touch error may occur.

Afterimage

- After-image appears when the product is turned off.
  - Pixels may be damaged rapidly if a still image is displayed on the screen for a long period of time. Use the screen-saver function.
  - If a screen with colours with a large difference in luminance (black and white, grey) is output, an after-image may appear when the screen is switched to a dark screen. This is normal due to the display characteristics of this product.
- When the LCD screen is in a still pattern for extended periods of use, a slight voltage difference may occur between the electrodes that operate the liquid crystal (LC). The voltage difference between the electrodes increases over time and tends to keep the liquid crystal aligned in one direction. At this time, the previous image remains, which is called an afterimage.
- Afterimages do not occur when continuously changing images are used but take place when a certain screen is fixed for a long time. The following are operational recommendations for reducing the occurrence of afterimages when using a fixed screen. The maximum recommended time for switching the screen is 12 hours. Shorter cycles are better for preventing afterimages.
- Recommended Usage Condition

1 Change the background colour and text colour at equal intervals.
- If the colours changed are complementary to each other, it is advantageous to prevent after-image.

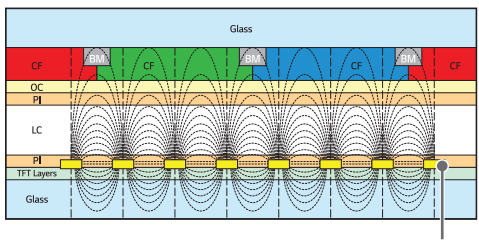

2 Switch the screen at equal time intervals.
- Take caution, and ensure that text or images from before the screen change are not left in the same location after the screen change.

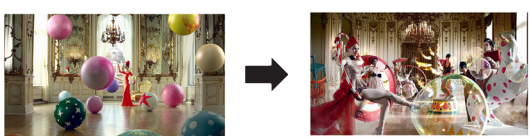

PRODUCT SPECIFICATIONS

Without prior notice, all product information and specifications contained in this manual are subject to change to improve the performance of the product.

The ~ symbol means alternating current, and the symbol ⎓ means direct current.

LCD Screen	Screen Type	TFT (Thin Film Transistor) LCD (Liquid Crystal Display) Screen
Video Signal	Max Resolution	1920 x 1080 @ 60 Hz - This may not be supported on some OS or graphics card types.
Input/Output Ports	USB 2.0, USB 3.0, DC IN, LAN, RS232	
Embedded Battery	Applied	
Environmental Conditions	Operating Temperature	0 °C to 40 °C
	Operating Humidity	10 % to 80 %
	Storage Temperature	-20 °C to 60 °C
	Storage Humidity	5 % to 85 %

*** For Models with Speaker Support Only**

Audio	RMS audio output	2.5 W + 2.5 W (R + L)
	Speaker impedance	4 Ω

27KC3P-MW		
LCD Screen	Pixel Pitch	0.3114 mm (H) x 0.3114 mm (V)
Power	Rating	100-240 V~ 50/60Hz 1.6 A
Dimensions (Width x Height x Depth) / Weight	625.8 mm x 364.3 mm x 47.2 mm / 5.7 kg	

The model and serial number of the product are located on the back and on one side of the product. Record them below in case you ever need service.

MODEL

SERIAL NO.

Temporary noise is normal when powering ON or OFF this device.