ENGLISH

OWNER'S MANUAL

LG Digital Signage

(MONITOR SIGNAGE)

Please read this manual carefully before operating your set and retain it for future reference.

105BM5N-B

www.lg.com

Copyright © 2024 LG Electronics Inc. All Rights Reserved.

Table of Contents

Getting to Know the Product 3

Checking Components 3

Checking Wall Mount Support Components 4

Checking the Optional Accessories 5

Installing the Product 6

Installing on Wall 6

Checking Wall Mount Support Specifications 6

Installing the Product 7

Installation Orientation 8

Tilt Angle 8

Ceiling, Floor Orientation 8

Installation Location 9

Indoor 10

Outdoor 10

Connecting to Power 11

Exploring the Product 12

Checking the Input/Output Terminals . . .12

Side Cable Terminal 12

Bottom Cable Terminal 13

Product Specifications 14

Speaker 15

Specifications by Model. 15

Resolution 16

HDMI / DP 16

TYPEC 1.2 18

Precautions for Use 20

Dust 20

Afterimage 20

Recommended Usage Condition 21

Licence 22

WARNING - This equipment is compliant with Class A of CISPR 32. In a residential environment this equipment may cause radio interference.

Getting to Know the Product

Checking Components

If any of the listed components are missing, contact customer support. LG Electronics also sells optional components that can help you use the product more effectively as separate purchases.

Product specifications or components may change without prior notice according to the quality improvements or feature upgrades.

Caution

- To ensure user safety and product longevity, do not use counterfeit products. If the product is damaged as a result of using counterfeits, the warranty does not apply. In such cases, the user cannot be compensated even if injured.
- If the product is used in an environment with excessive dust, the warranty does not apply.

Note

- Remove all tapes attached to the front before connecting the product to power.
- Cables used when connecting to external devices must be purchased separately.
- Keep the product box and do not discard it. It can be used when moving the product.

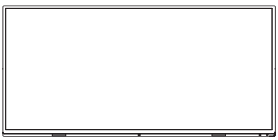

105BM5N-B

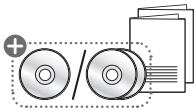

User manual and warranty

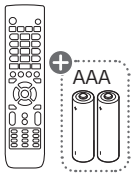

Remote control and batteries (AAA, 2 pieces)

HDMI cable

Power cable

WiFi dongle

Note

- ⊕ : Availability may vary depending on your geographic location.
- The components provided in the box may vary depending on the region and model.
- Component images shown in the user manual are for the user's understanding and may differ from actual components.

Checking Wall Mount Support Components

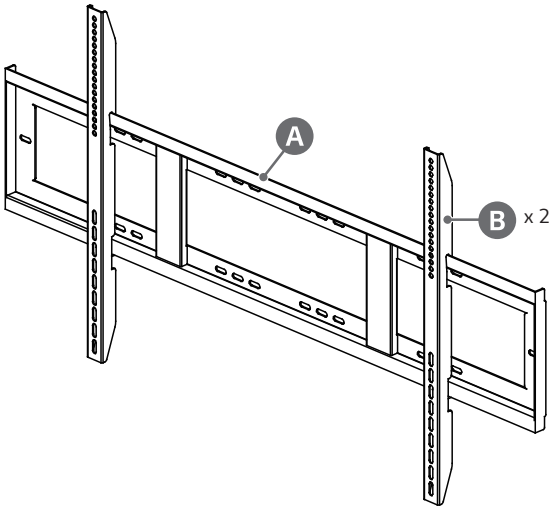

Wall mount support				
	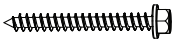			
C x 8	D x 8	E x 8	F x 4	G x 2

Checking the Optional Accessories

In order to improve product performance, optional accessories are subject to change without prior notice. The illustrations in this manual may differ from the actual product and its accessories. Refer to the product manual for the components of the optional accessories.

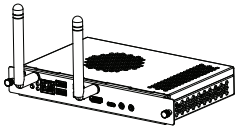

OPSJ-5LDJA

Note

- After connecting the cable to the port, mount the OPS (Open Pluggable Specification) PC.

Installing the Product

Installing on Wall

The monitor can be used in a wall-mounted format by securing it to a wall. To install it on a wall, first attach a wall mount support to the back of the product body.

Checking Wall Mount Support Specifications

When installing a wall mount support, you must use screws and brackets that comply with VESA (Video Electronics Standards Association) standard specifications.

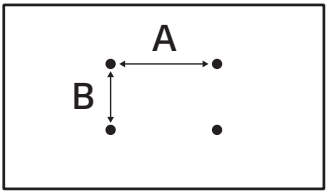

Model Name	VESA Dimensions (A x B) (mm)	Screw Specifications	Maximum Length (mm)	Quantity
105BM5N-B	1000 x 400	M8	25	4

Caution

- Disconnect the power cord first before moving or installing the product. There is risk of electric shock.
- Do not install the product on a ceiling or sloped wall. There is a risk of falling and injury.
- If you tighten the screws too tightly and damage the product, the warranty may not apply.
- Use screws and brackets for wall mounting that meet the VESA standard specifications. The warranty does not apply to the breakage or personal injury due to the use of incorrect components.
- Using screws longer than VESA standard specifications when installing a wall mount support may damage the interior of the product.
  In such cases, we do not take responsibility for any damage or issues that may arise with the product.

Installing the Product

1 First, drill a hole into the wall for installation and insert the expansion plug into the hole.

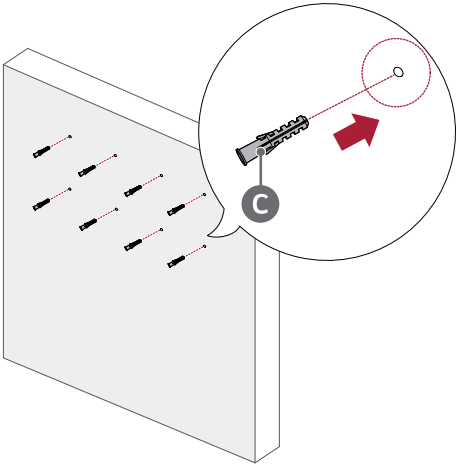

2 Securely fasten the wall mount to the wall using screws and washers.

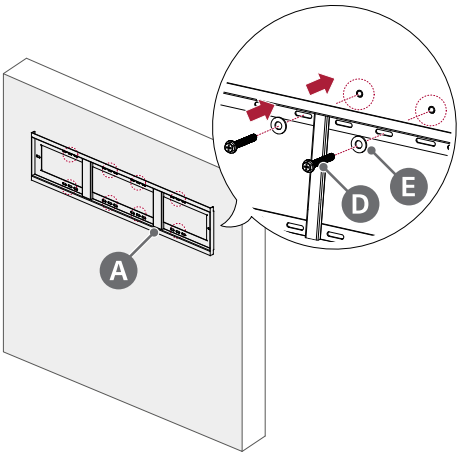

3 Fasten the bracket to the panel with screws.

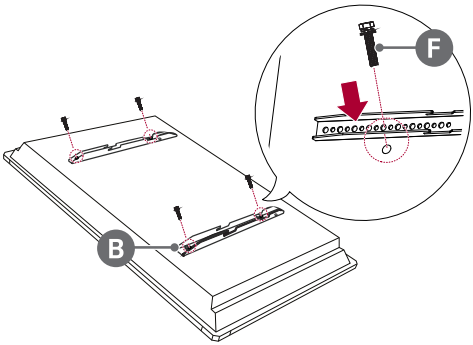

4 Hang the panel on the wall mount, and secure it with fastening bolts.

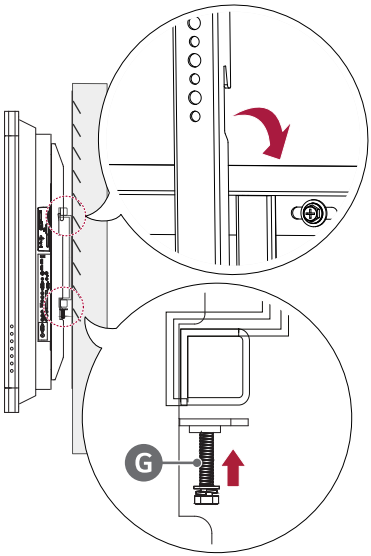

Installation Orientation

Tilt Angle

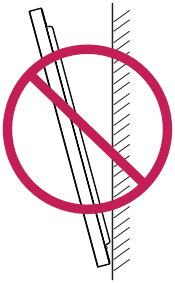

Ceiling, Floor Orientation

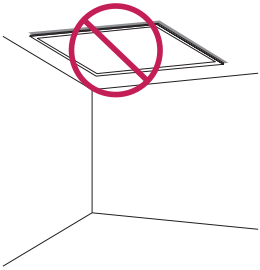

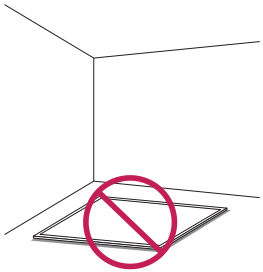

Installation Location

Allow at least 10 cm of clearance from the wall for ventilation, and install the product with care to prevent it from falling.

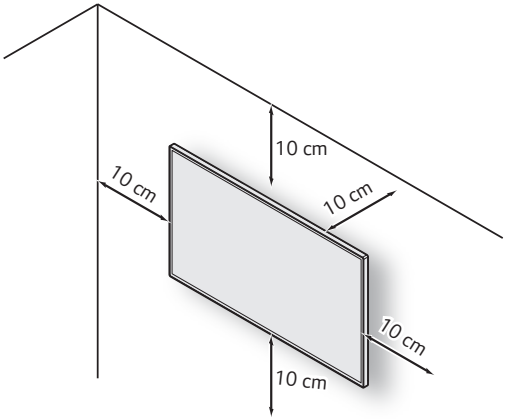

We are not responsible for product damage caused by failure to follow the guide.

Indoor

Installing on a Wall

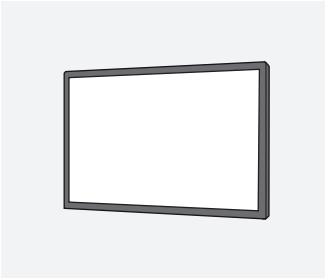

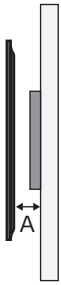

A : 100 mm or more

- The product warranty will be void if it is used with the front panel exposed to direct sunlight.
- Leave sufficient space around the product to avoid blocking the ventilation holes.

Installing on a Recessed Wall

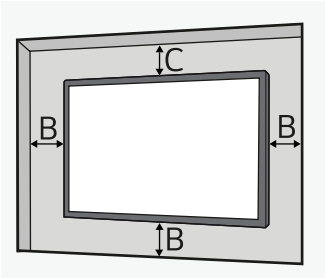

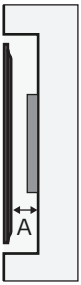

A : 100 mm or more

B : 100 mm or more

C : 100 mm or more

- The product warranty will be void if it is used with the front panel exposed to direct sunlight.

Outdoor

Outdoor Enclosed

Connecting to Power

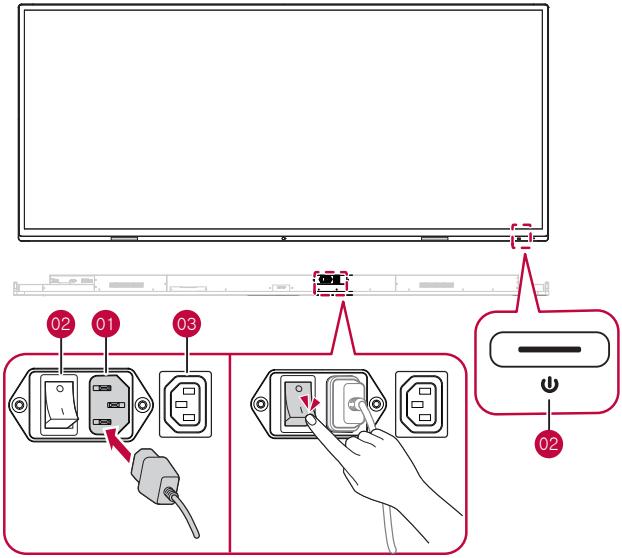

1 Connect the power cable provided as a component to the power terminal at the bottom of the product.

2 Press the power switch on the front of the product or next to the power terminal to turn the power on.

Note

- The screen may flicker if the product is turned on when it is cold. This is normal, so there is no need to worry.

No.	Name	Explanation
01	**Power Cable Terminal**	Connects the power cord.
02	**Power Switch**	Turns the power on or off. - "I" means power on, and "O" means power off.
03	**AC OUT**	Used to output AC power or connecting AC power supply. (250 W or less)

Exploring the Product

Checking the Input/Output Terminals

Side Cable Terminal

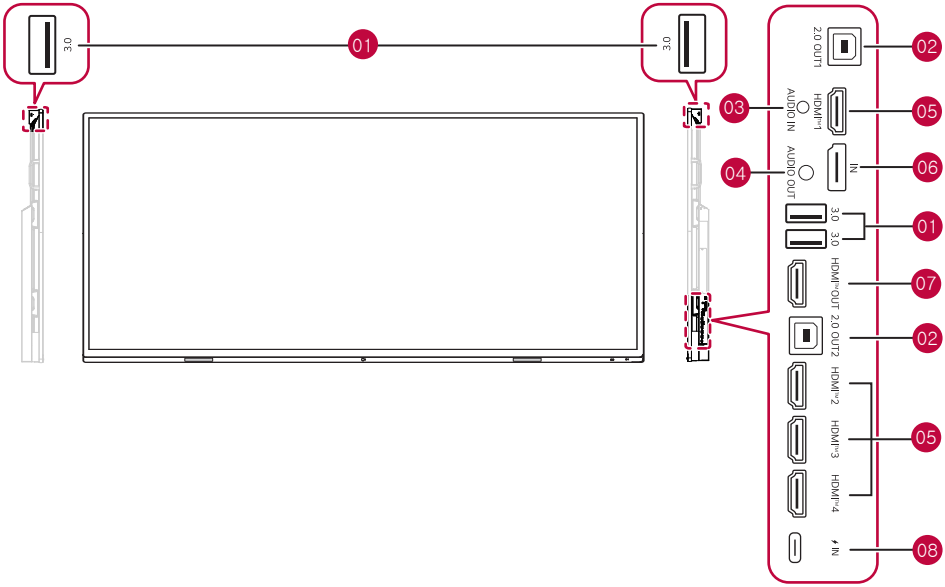

No.	Name	Explanation
01	USB 3.0	Used for data transfer or connecting USB devices such as a mouse or keyboard with a USB cable.
02	2.0 OUT 1,2	Used to export a device or network to an external device.
03	AUDIO IN	Used to input audio from an external device.
04	AUDIO OUT	Used to output audio to an external device.
05	HDMI 1,2,3,4	Used to connect external devices with a HDMI cable.
06	DP IN	Used to connect external devices with a DP cable.
07	HDMI OUT	Used to export the screen to an external device with an HDMI cable.
08	USB Type-C	Used to connect external devices with a USB Type-C cable.

Bottom Cable Terminal

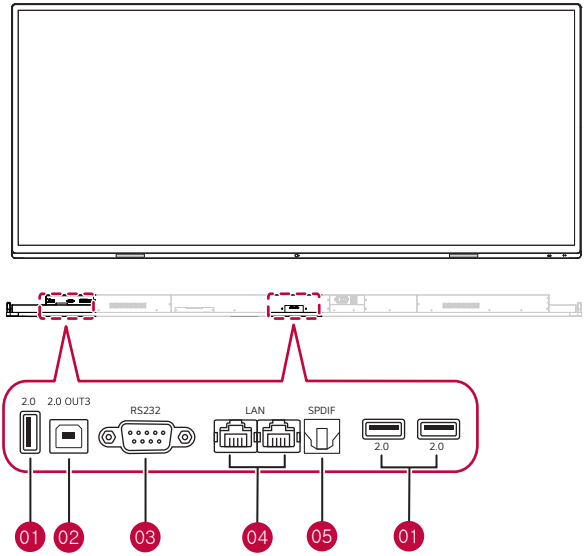

No.	Name	Explanation
01	**USB 2.0**	Used for data transfer or connecting USB devices such as a mouse or keyboard with a USB cable.
02	**2.0 OUT 3**	Used to export a device or network to an external device.
03	**RS232**	Used to connect an RS232 cable.
04	**Wired LAN**	Used for wired internet connection.
05	**SPDIF**	Used to output audio to an external device using an SPDIF cable.

Product Specifications

Without prior notice, all product information and specifications contained in this manual are subject to change to improve the performance of the product.

The ~ symbol means alternating current, and the symbol ⎓ means direct current.

Input/Output Ports	HDMI IN 2.1, HDMI IN 2.0, DP IN, RS-232C IN, LAN IN, USB 2.0 IN, USB 3.0 IN, USB Type C, AUDIO IN HDMI OUT, AUDIO OUT, USB 2.0 OUT, OPTICAL OUT, LAN OUT	
Embedded Battery	Applied	
Resolution	Recommended Resolution	5120 x 2160 (5K) @ 60 Hz
	Max Resolution	3840 x 2160 @ 60 Hz (HDMI 2.0 / USB Type-C) 5120 x 2160 @ 60 Hz (HDMI 2.1 / DP 1.4) - This may not be supported on some OS or graphics card types.
Environmental Conditions	Operating Temperature	0 °C to 40 °C
	Operating Humidity	10 % to 90 % (Condition for preventing condensation)
	Storage Temperature	-20 °C to 60 °C
	Storage Humidity	10 % to 90 % (Condition for preventing condensation) * Product box packaging storage conditions

Note

- The maximum rated power of the USB Type-C port of this product is 100 W. When using this port to charge electronic devices, the charging power of the electronic device cannot exceed the rated power of this port. If the charging power of the electronic device exceeds the rated charging power of this port, please Do not directly use this port for charging.
- Use a certified USB-C cable. (1.5 M or less) If you do not do so, the screen may not be displayed or a connection error may occur.
- USB-C ports do not support DPM (Sleep mode).
- Video daisy chain can be configured through HDMI OUT, and the input resolution can be supported up to 3840 x 2160 @ 30 Hz.

Speaker

* Applicable only to speaker-supporting models.

Audio	RMS audio output	15 W + 16 W (R + L)
	Input Sensitivity	0.5 Vrms
	Speaker impedance	6 Ω

Specifications by Model

105BM5N-B		
Power	Power Voltage	100-240 V~ 50/60 Hz 8.0 A
Dimensions (Width x Height x Depth) / Weight	2510.6 mm x 1123.1 mm x 93.6 mm / 90.1 kg	

Resolution

Note

- Vertical Frequency: The monitor screen functions by the screen image changing dozens of times every second like a fluorescent lamp. The vertical frequency or refresh rate is the number of image displays per second. The unit is Hz.
- Horizontal Frequency: The horizontal interval is the time taken to display one horizontal line. When one is divided by the horizontal interval, the number of horizontal lines displayed every second is the horizontal frequency. The unit is kHz.

HDMI / DP

Resolution	Horizontal Frequency (kHz)	Vertical Frequency (Hz)	Note
640 x 480 @ 60 Hz	31.469	59.94	
640 x 480 @ 60 Hz 4:3	31.5	60	
720 x 480 @ 60 Hz 4:3	31.5	60	
720 x 480 @ 60 Hz	31.5	60	
800 x 600 @ 56 Hz	35.156	56.25	
800 x 600 @ 60 Hz	37.879	60.32	
848 x 480 @ 60 Hz	31	60	
1024 x 768 @ 60 Hz	48.363	60.00	
1280 x 720 @ 60 Hz	45	60	
1280 x 720 @ 60 Hz	45	60	
1280 x 768 @ 60 Hz (RB)	47.396	59.99	
1280 x 768 @ 60 Hz	47.776	59.87	
1280 x 800 @ 60 Hz	49.702	59.81	
1280 x 960 @ 60 Hz	60	60	
1280 x 1024 @ 60 Hz	63.981	60.02	
1360 x 768 @ 60 Hz	47.712	60.02	
1366 x 768 @ 60 Hz	47.712	59.79	(For HDMI 2/3/4 only)

Resolution	Horizontal Frequency (kHz)	Vertical Frequency (Hz)	Note
1400 x 1050 @ 60 Hz (RB)	64.744	59.948	
1400 x 1050 @ 60 Hz	65.317	59.978	
1600 x 900 @ 60 Hz	60	60	
1600 x 1200 @ 60 Hz	75	60	
1680 x 1050 @ 60 Hz (RB)	64.674	59.883	
1680 x 1050 @ 60 Hz	65.290	59.95	
1920 x 1080 @ 23 Hz	26.973	23.98	
1920 x 1080 @ 24 Hz	27	24	
1920 x 1080 @ 25 Hz	28.125	25	
1920 x 1080 @ 30 Hz	33.75	30	
1920 x 1080 @ 60 Hz	67.5	60	
1080i @ 60 Hz	33.75	60	
1080i @ 50 Hz	28.125	50	
3840 x 2160 @ 60 Hz	135	59.94	
3840 x 2160 @ 50 Hz	112.5	50	
3840 x 2160 @ 30 Hz	67.5	29.97	
3840 x 2160 @ 25 Hz	56.25	25	
3840 x 2160 @ 24 Hz	54	23.98	
3840 x 2160 @ 23 Hz	53.946	23.976	
3440 x 1440 @ 60 Hz	89.48	59.94	
3440 x 1440 @ 50 Hz	74.14	49.96	
3440 x 1440 @ 30 Hz	43.96	29.95	
5120 x 2160 @ 30 Hz	66	30	(For HDMI 1 only)
5120 x 2160 @ 50 Hz	112.5	50	(For HDMI 1 only)
5120 x 2160 @ 60 Hz	135	60	(For HDMI 1 only)

TYPEC 1.2

Resolution	Horizontal Frequency (kHz)	Vertical Frequency (Hz)	Note
640 x 480 @ 60 Hz	31.469	59.94	
640 x 480 @ 60 Hz 4:3	31.5	60	
720 x 480 @ 60 Hz 4:3	31.5	60	
720 x 480 @ 60 Hz	31.5	60	
800 x 600 @ 56 Hz	35.156	56.25	
800 x 600 @ 60 Hz	37.879	60.32	
848 x 480 @ 60 Hz	31	60	
1024 x 768 @ 60 Hz	48.363	60	
1280 x 720 @ 60 Hz	45	60	
1280 x 720 @ 60 Hz	45	60	
1280 x 768 @ 60 Hz (RB)	47.396	59.99	
1280 x 768 @ 60 Hz	47.776	59.87	
1280 x 800 @ 60 Hz	49.702	59.81	
1280 x 960 @ 60 Hz	60	60	
1280 x 1024 @ 60 Hz	63.981	60.02	
1360 x 768 @ 60 Hz	47.712	60.02	
1366 x 768 @ 60 Hz	47.712	59.79	
1400 x 1050 @ 60 Hz (RB)	64.744	59.948	
1400 x 1050 @ 60 Hz	65.317	59.978	
1600 x 900 @ 60 Hz	60	60	
1600 x 1200 @ 60 Hz	75	60	
1680 x 1050 @ 60 Hz (RB)	64.674	59.883	
1680 x 1050 @ 60 Hz	65.290	59.95	

Resolution	Horizontal Frequency (kHz)	Vertical Frequency (Hz)	Note
1920 x 1080 @ 23 Hz	26.973	23.98	
1920 x 1080 @ 24 Hz	27	24	
1920 x 1080 @ 25 Hz	28.125	25	
1920 x 1080 @ 30 Hz	33.75	30	
1920 x 1080 @ 60 Hz	67.5	60	
3840 x 2160 @ 60 Hz	135	59.94	
3840 x 2160 @ 50 Hz	112.5	50	
3840 x 2160 @ 30 Hz	67.5	29.97	
3840 x 2160 @ 25 Hz	56.25	25	
3840 x 2160 @ 24 Hz	54	23.98	
3840 x 2160 @ 23 Hz	53.946	23.976	
3440 x 1440 @ 60 Hz	89.48	59.94	
3440 x 1440 @ 50 Hz	74.14	49.96	
3440 x 1440 @ 30 Hz	43.96	29.95	

Precautions for Use

Dust

The warranty will not cover any damage caused by using the product in an excessively dusty environment.

Afterimage

- After-image appears when the product is turned off.
  - Pixels may be damaged rapidly if a still image is displayed on the screen for a long period of time. Use the screen-saver function.
  - Switching from a screen with high differences in luminance (black and white or grey) to a darker screen may cause an afterimage. This is normal due to the display characteristics of this product.
- When the LCD screen is in a still pattern for extended periods of use, a slight voltage difference may occur between the electrodes that operate the liquid crystal (LC). The voltage difference between the electrodes increases over time and tends to keep the liquid crystal aligned in one direction. At this time, the previous image remains, which is called an afterimage.
- Afterimages do not occur when continuously changing images are used but take place when a certain screen is fixed for a long time. The following are operational recommendations for reducing the occurrence of afterimages when using a fixed screen. The maximum recommended time for switching the screen is 12 hours. Shorter cycles are better for preventing afterimages.

Recommended Usage Condition

1 Change the background colour and text colour at equal intervals.
- Afterimages occur less when the colours to be changed are complementary to one another.

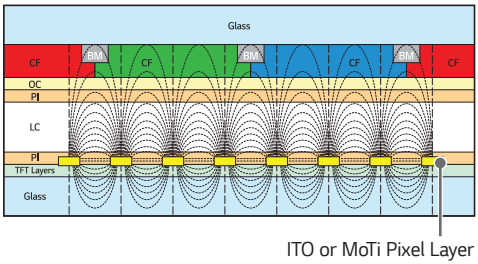

2 Switch the screen at equal time intervals.
- Take caution, and ensure that text or images from before the screen change are not left in the same location after the screen change.

Licence

Supported licenses may differ by model. Visit *www.lg.com* for more information on licenses.

HDMI™
HIGH-DEFINITION MULTIMEDIA INTERFACE

The terms HDMI, HDMI High-Definition Multimedia Interface, HDMI trade dress and the HDMI Logos are trademarks or registered trademarks of HDMI Licensing Administrator, Inc.

This product qualifies for ENERGY STAR®.
Changing the factory default configuration and settings or enabling certain optional features and functionalities may increase energy consumption beyond the limits required for ENERGY STAR® certification.
Refer to ENERGYSTAR.gov for more information on the ENERGY STAR® program.

The model and serial number of the product are located on the back and on one side of the product. Record them below in case you ever need service.

MODEL _____

SERIAL NO. _____

Temporary noise is normal when powering ON or OFF this device.