Jabra GN

INSTALLATION MANUAL

PANACAST 55 VBS

Built for work. Designed for freedom.

© 2026 GN A/S. All rights reserved. Jabra® is a trademark of GN group. The Bluetooth® word mark and logos are registered trademarks owned by the Bluetooth SIG, Inc. and any use of such marks by GN A/S is under license.

Made in Thailand

MODEL: VSM040; VTD050

Declaration of Conformity can be found on www.jabra.com/doc

1. Overview 5
1.1 PanaCast 55 VBS bar
1.2 Jabra Control IP
1.3 Included accessories - PanaCast 55 VBS bar
1.4 Included peripherals - Jabra Control IP
1.5 Optional peripherals
1.6 Optional accessories
1.7 Dimensions - PanaCast 55 VBS bar
1.8 Dimensions - Jabra Control IP
1.9 Dimensions - PanaCast SpeakerMic (optional peripheral)
2. Quick system provisioning..... 16
2.1 Provisioning using the Web Console
2.2 Provisioning using the video bar
3. Room setup guide 19
4. Mounting 20
4.1 Wall mount
4.2 Screen mount
4.3 Table stand
4.4 Height
4.5 Touch controller installation
5. Cabling 27
5.1 Room system
5.2 Room system - video bar only
5.3 Touch controller
5.4 BYOD (Bring Your Own Device) mode
5.5 PanaCast SpeakerMic - optional peripheral
5.6 Huddly L1 - optional peripheral
5.7 Huddly crew - optional peripheral
6. Configuring..... 38
6.1 Configuration using the touch controller
6.2 Configuration using the video bar

7. Pairing of video bar and touch controller 41

8. Remote management 42

8.1 Web Console

8.2 Jabra Plus Management

9. Software 44

9.1 Operating system

10. Restart devices 45

11. Factory reset 48

12. Languages 52

13. Support 53

13.1 FAQ and technical specifications

13.2 How to care for your Jabra device

1. Overview

1.1 PanaCast 55 VBS bar

FRONT

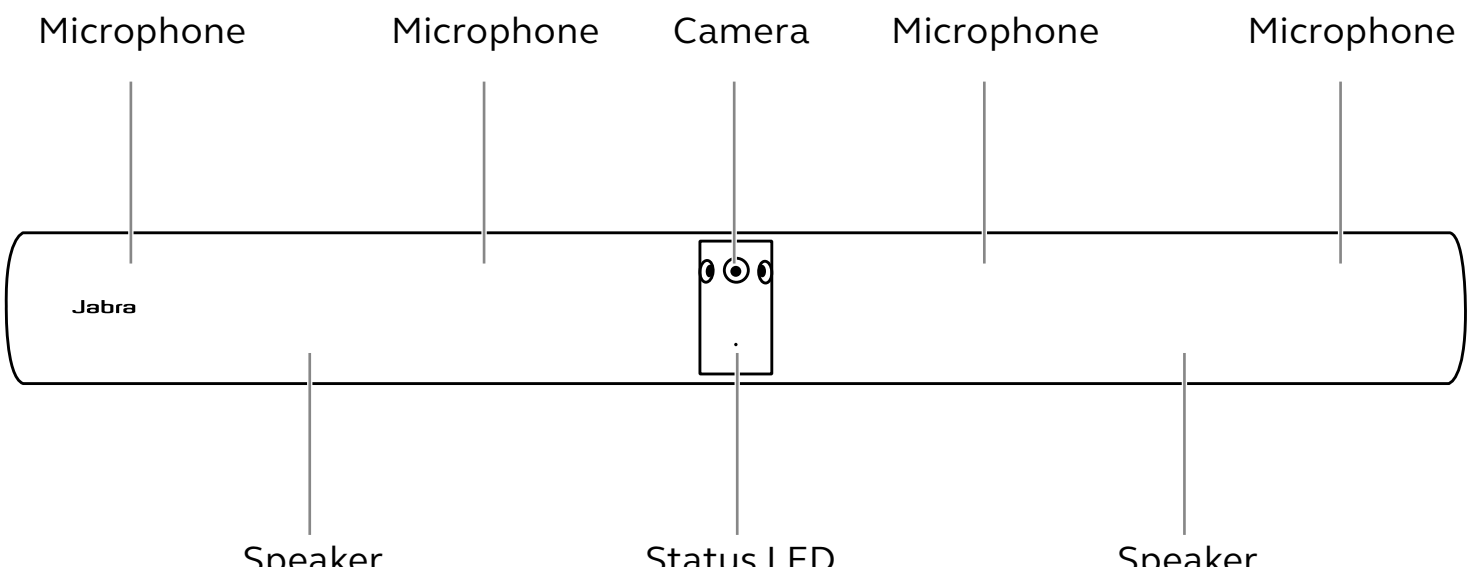

SECURITY NOTE: microphones and cameras can be used to record private conversations and footage.

BACK

PORT CONNECTIONS

- HDMI for wired content sharing
- HDMI OUT for second monitor
- HDMI OUT for monitor
- USB-A for touchscreen, USB mouse or optional peripherals
- USB-C for PanaCast SpeakerMic or optional peripherals
- Ethernet network
- USB-C for BYOD
- Power
- AUX OUT for assistive listening devices

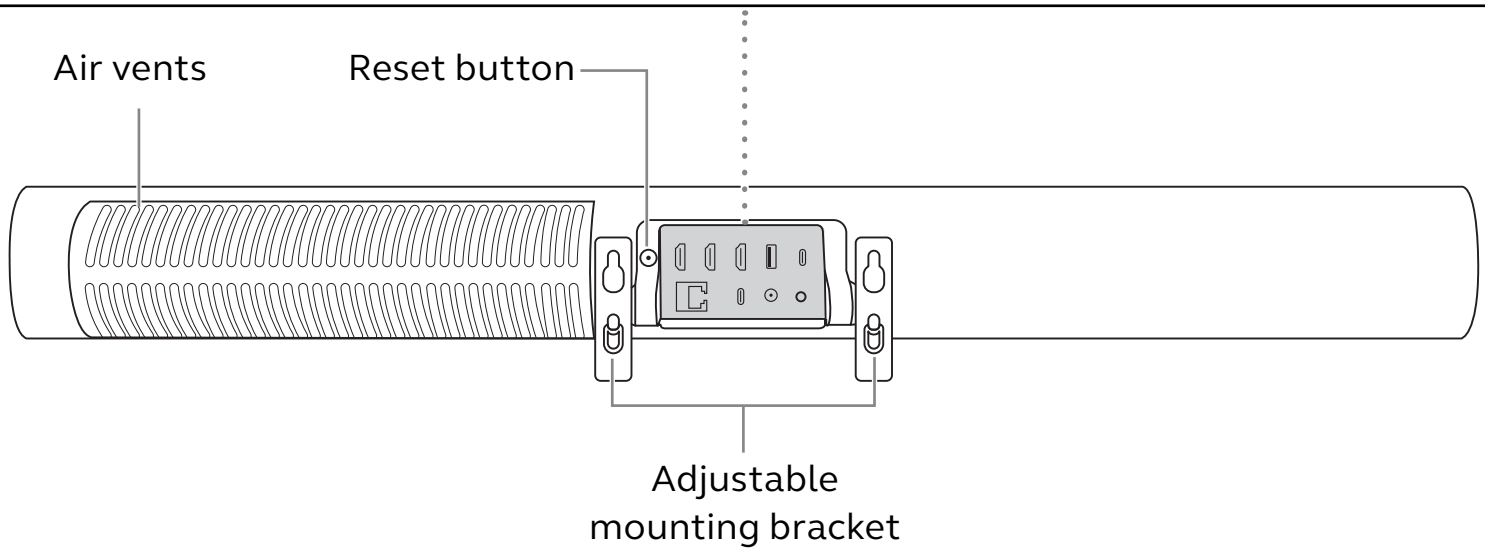

SECURITY NOTE: Bluetooth, Ethernet or Wi-Fi connections can potentially be used to transfer data to unauthorized devices.

1.2 Jabra Control IP

FRONT

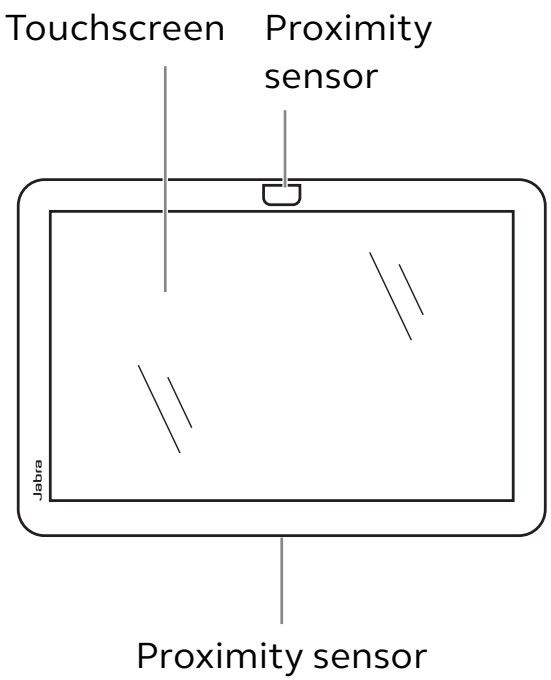

BACK

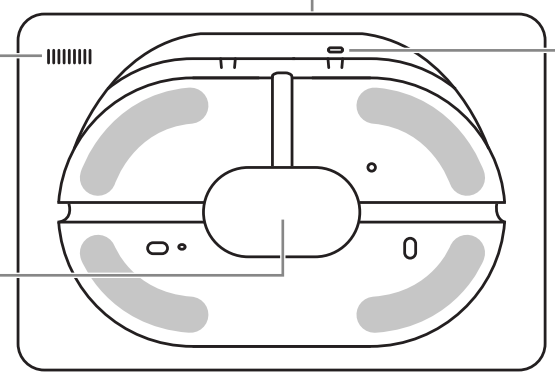

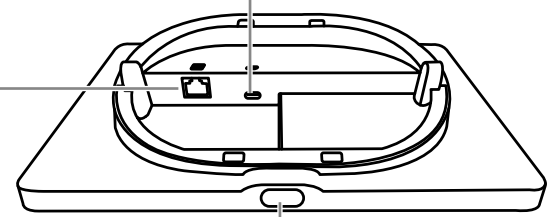

SECURITY NOTE: sensors can potentially be used to detect the presence of a user.

1.3 Included accessories - PanaCast 55 VBS bar

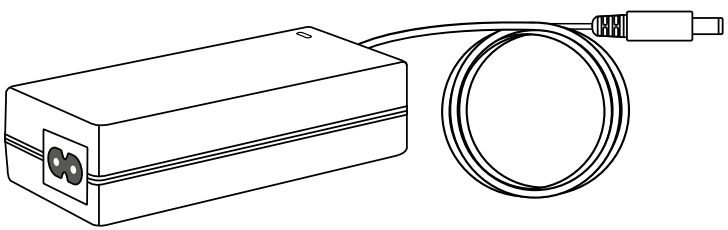

AC power adapter *(1.8m/6ft)*

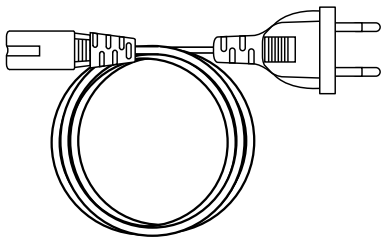

AC power cable *(1m/3.2ft)*

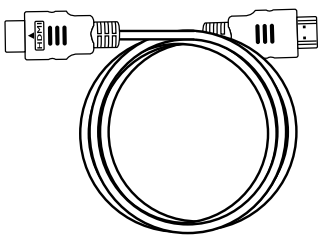

HDMI 2.0 Premium High Speed cable *(1.8m/6ft)*

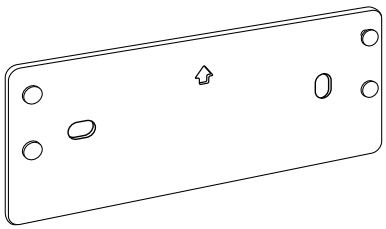

video bar mount

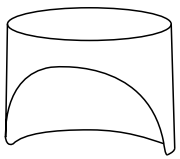

Camera privacy cover

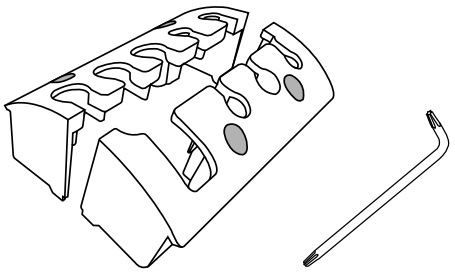

Cable compartment cover *(2 pcs)* **with embedded screws & screwdriver**

Additional accessories can be purchased at *jabra.com/accessories*

1.4 Included peripherals - Jabra Control IP

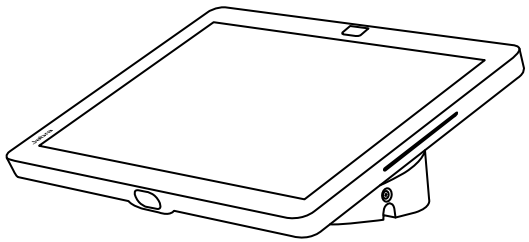

Jabra Control IP

The Jabra Control IP can also function as a *Jabra Scheduler* if required.

1.5 Optional peripherals

Additional peripherals can be purchased at *jabra.com/accessories*

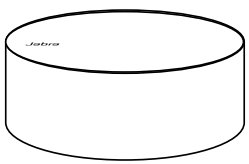

PanaCast SpeakerMic

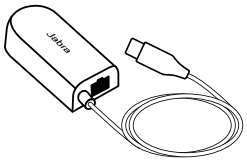

PanaCast SpeakerMic Adapter

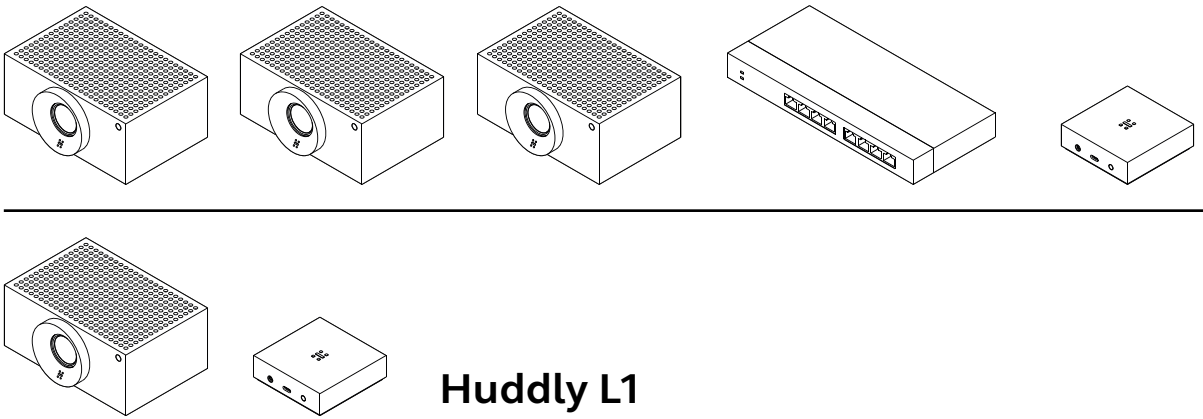

Huddly crew

Huddly L1

More information on add-on cameras *here*.

1.6 Optional accessories

Accessories can be purchased at *jabra.com/accessories*

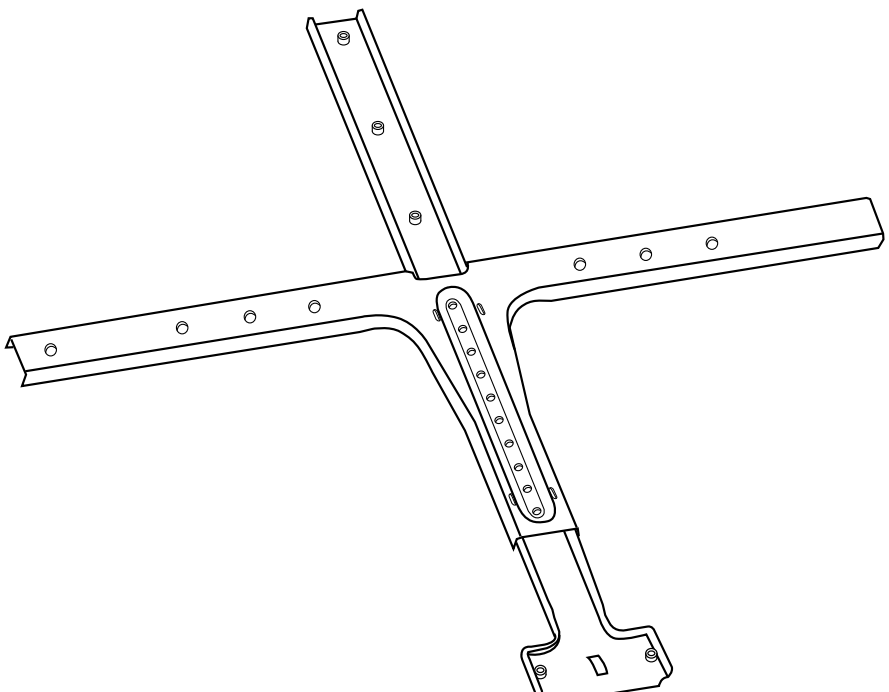

Screen mount

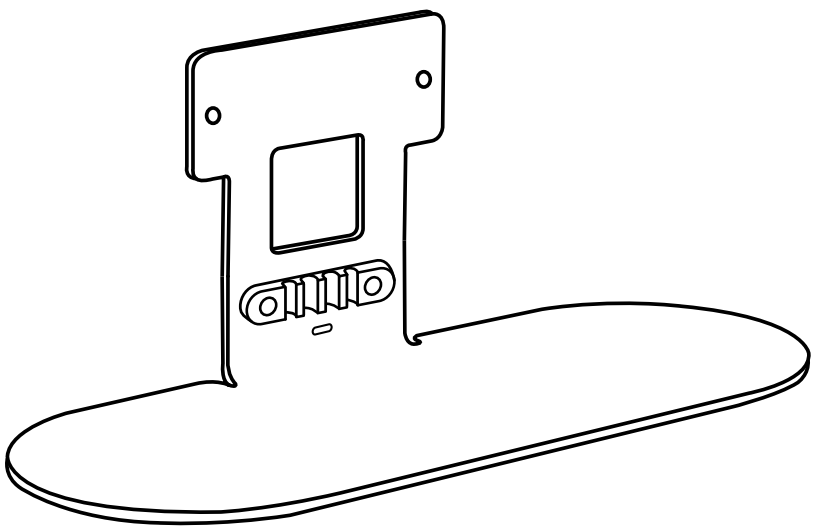

Table stand

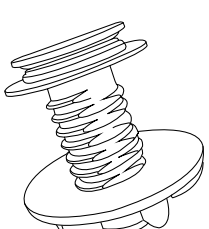

Jabra Control IP table mount

Accessories can be purchased at *jabra.com/accessories*

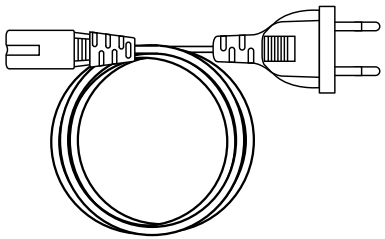

Regional power cords
(1m/3.2ft)

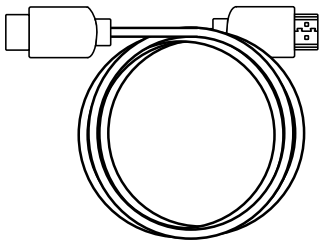

HDMI cable
(1.8m/6ft)

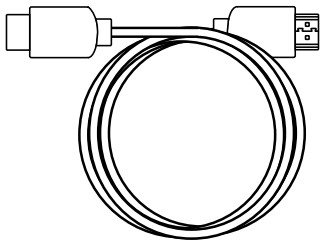

HDMI ingest cable
(4.5m/15ft)

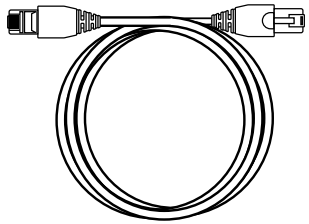

RJ45 Ethernet cable
(4.5m/15ft)

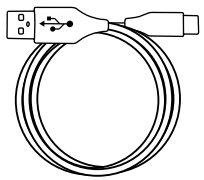

USB-A to C cable
(4.5m/15ft)

POWER OVER ETHERNET (PoE) KIT

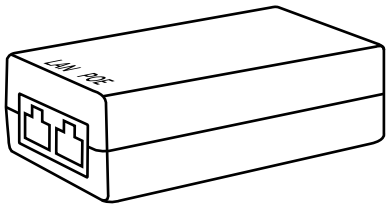

PoE injector

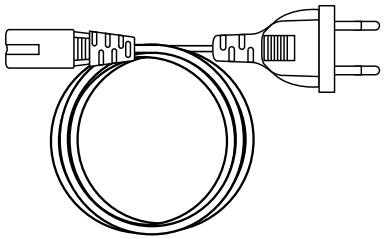

AC power cable
(1m/3.2ft)

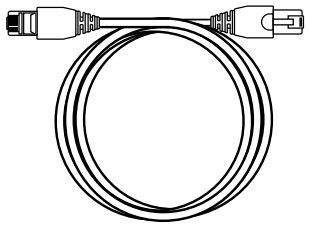

RJ45 Ethernet cable
(4.5m/15ft)

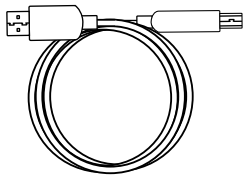

USB-A to B cable
(1.8m/6ft)

1.7 Dimensions - PanaCast 55 VBS bar

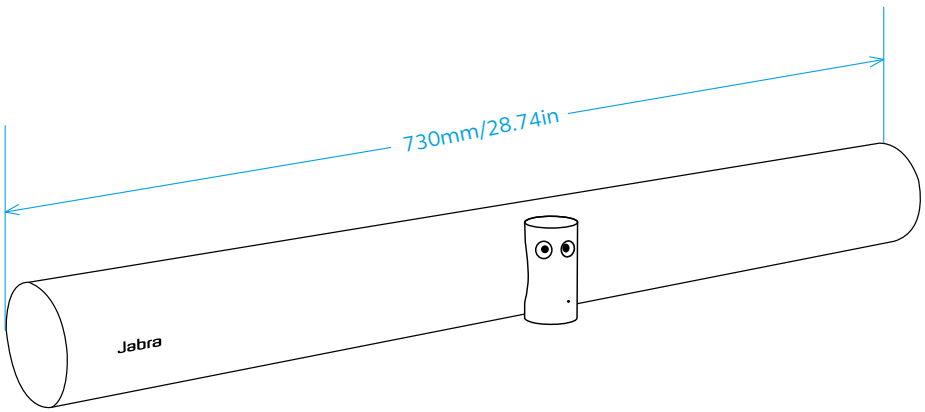

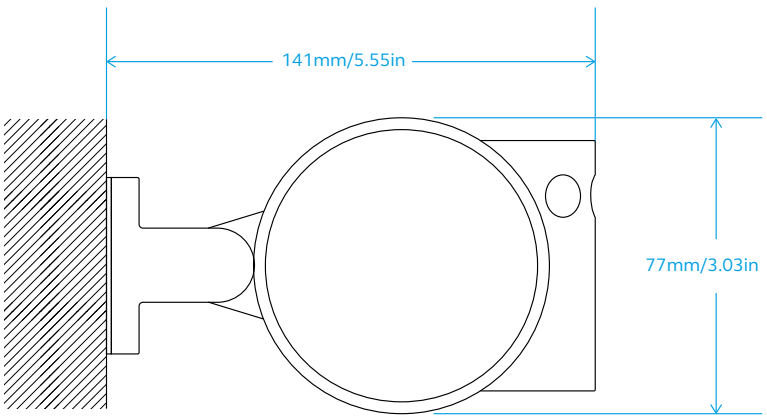

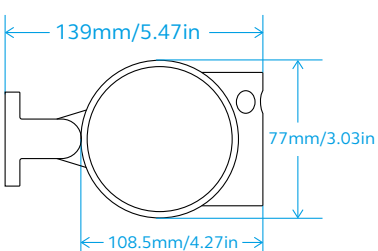

1.8 Dimensions - Jabra Control IP

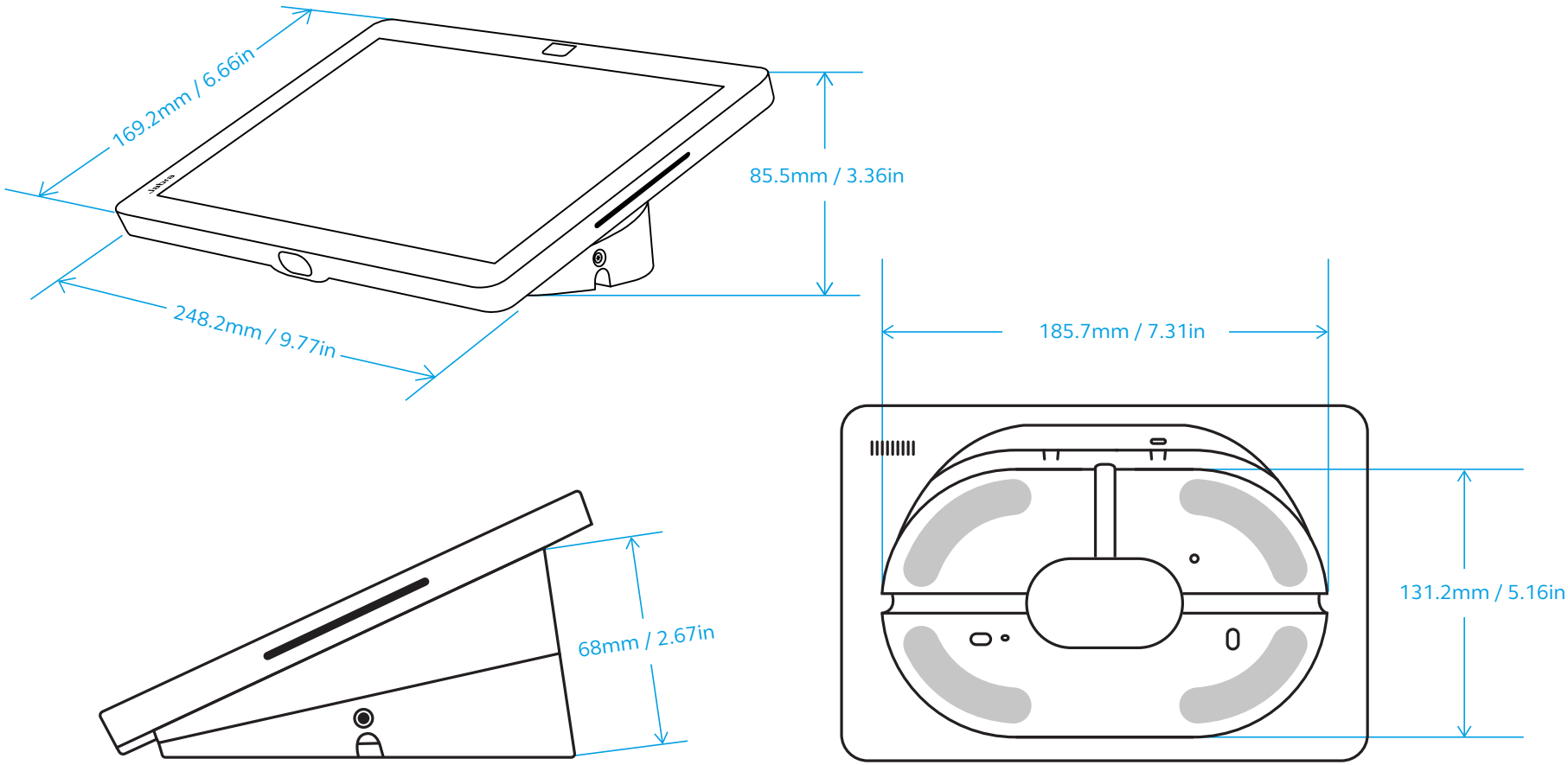

The Jabra Control IP can also function as a *Jabra Scheduler* if required.

1.9 Dimensions - PanaCast SpeakerMic (optional peripheral)

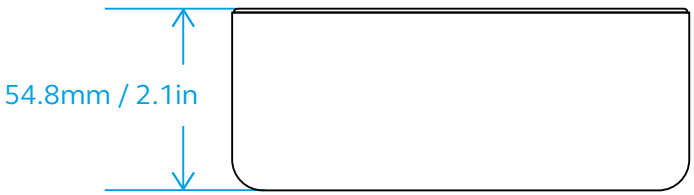

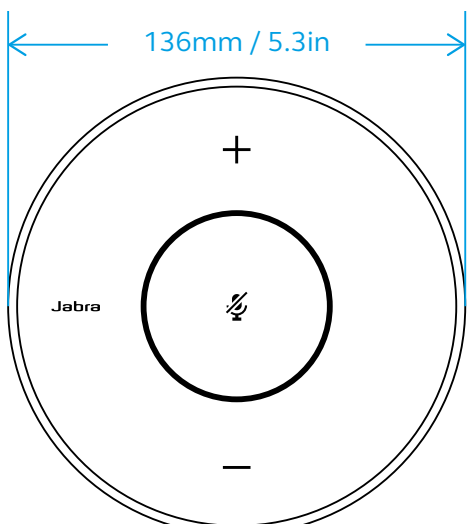

PanaCast SpeakerMic

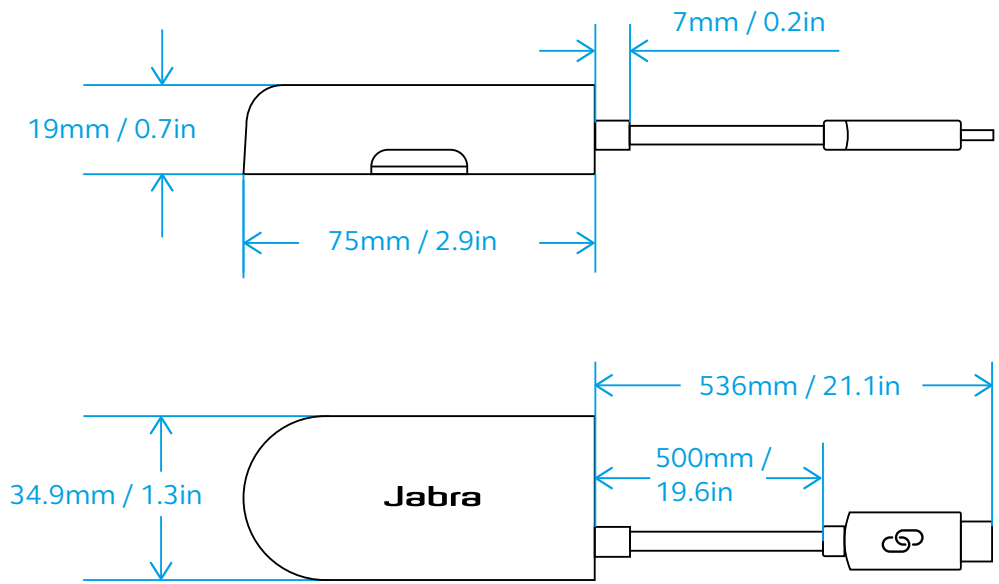

PanaCast SpeakerMic Adapter

2. Quick system provisioning

The PanaCast 55 VBS box includes a provisioning window to easily connect the necessary cables to provision the system without having to remove the product from the box.

2.1 Provisioning using the Web Console

1. Connect the power, HDMI and Ethernet (not included) cables to the video bar and Power over Ethernet cable to the touch controller. Ensure both the video bar and the touch controller are connected to the same local area network (LAN).
2. Using a computer, access the Web Console by entering the IP address displayed on the monitor connected to the video bar.
3. Log in with username **admin**, and password **last 6 digits of the serial number displayed on the monitor**.
4. Follow the Setup wizard on the computer.
5. Follow the remote provisioning instructions using Teams or Zoom.
6. Specify the provisioning code and installation details on the side of the box to facilitate the installation process.

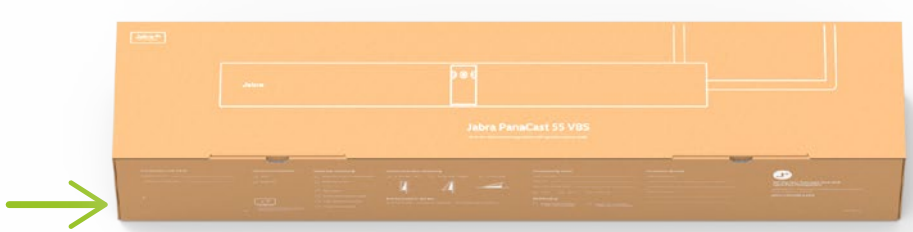

2.2 Provisioning using the video bar

1. Connect the power, HDMI and Ethernet (not included) cables to the video bar and Power over Ethernet cable to the touch controller. Ensure both the video bar and the touch controller are connected to the same local area network (LAN).
2. Connect a USB mouse directly to the video bar and select **Continue on this device**.
3. Follow the Setup wizard on the monitor connected to the video bar.
4. Follow the remote provisioning instructions using Teams or Zoom.
5. Specify the provisioning code and installation details on the side of the box to facilitate the installation process.

3. Room setup guide

The PanaCast 55 VBS is designed for meeting rooms up to 4.5 meters x 6 meters (15 feet x 20 feet).

View the Room setup guide PDF here: *jabra.com/supportpages/jabra-panacast-55-vbs*

Below are some typical room setup scenarios.

4. Mounting

4.1 Wall mount

View the wall mount assembly video and PDF here.

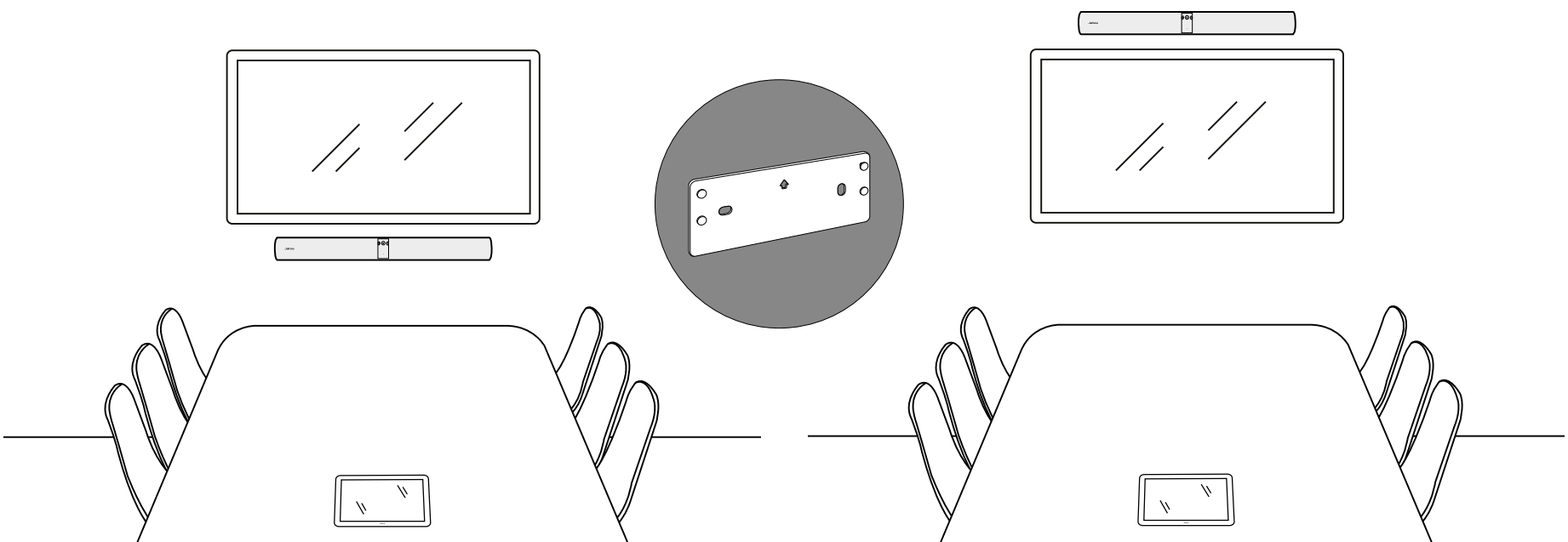

Attach to video bar mount

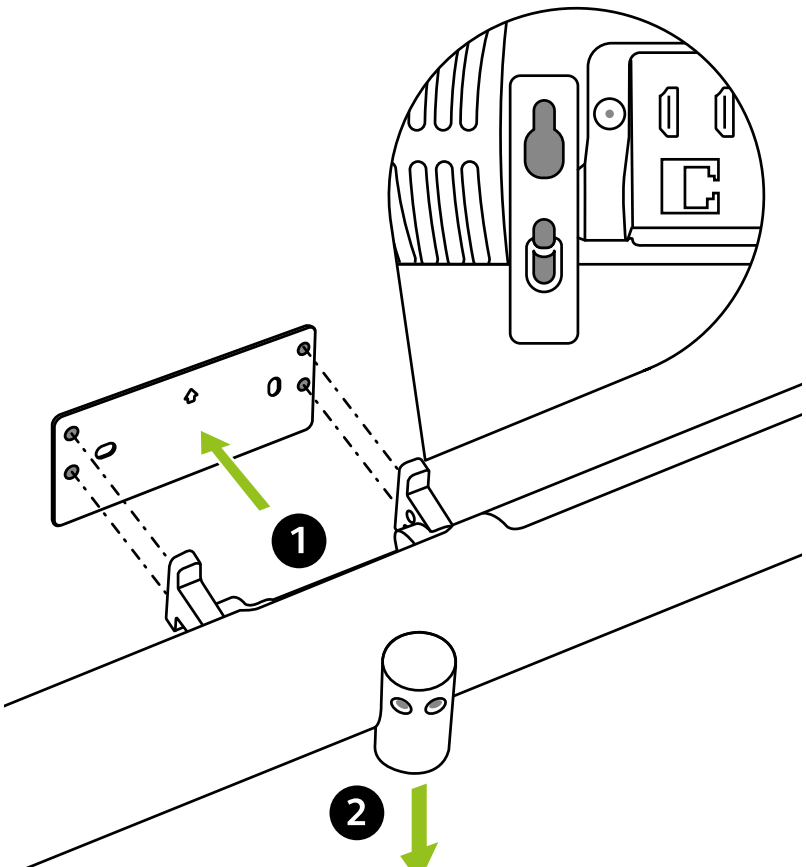

Detach from video bar mount

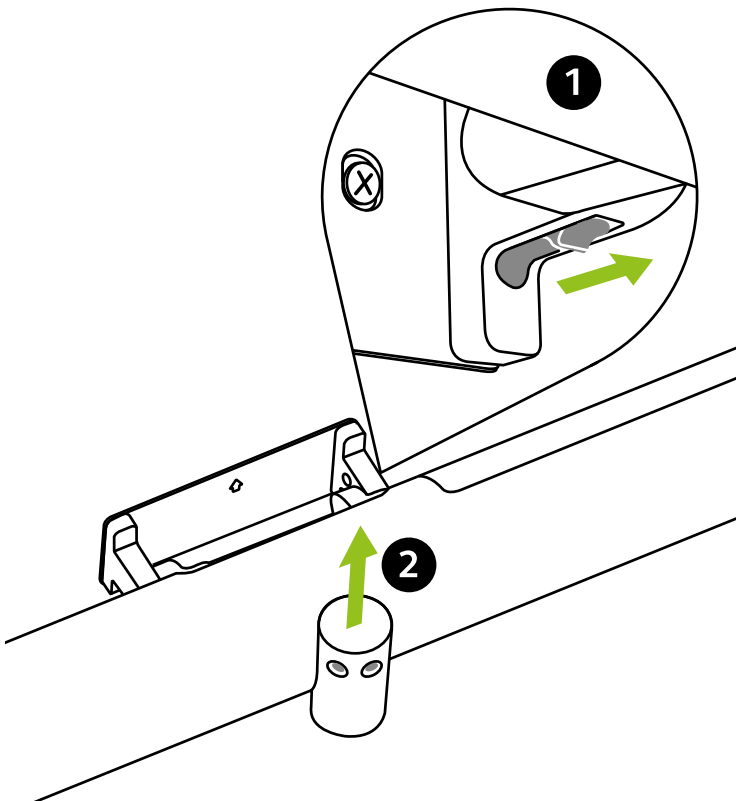

4.2 Screen mount

The screen mount is an additional accessory and can be purchased at jabra.com/accessories.

The screen mount is designed for screens up to 220 centimeters (86 inches) and VESA mounts up to 600 millimeters (23.6 inches).

View the screen mount assembly video and PDF here.

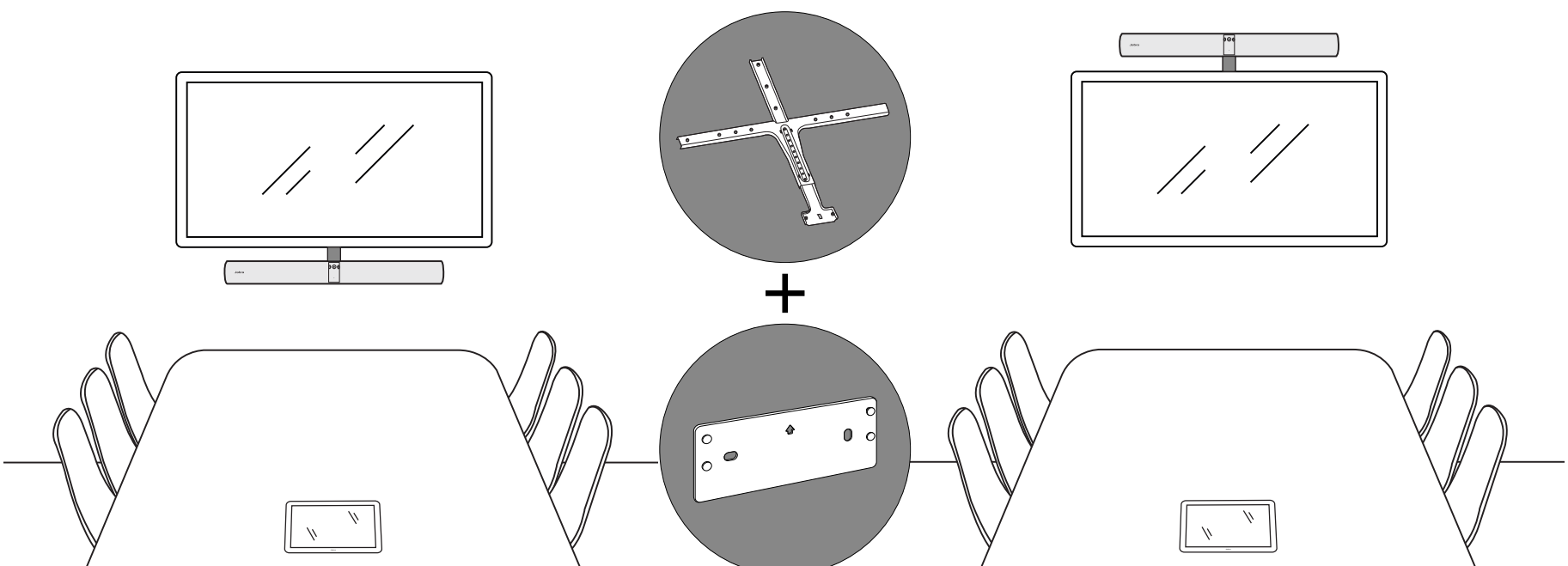

4.3 Table stand

The table stand is an additional accessory and can be purchased at jabra.com/accessories.

View the table stand assembly video and PDF here.

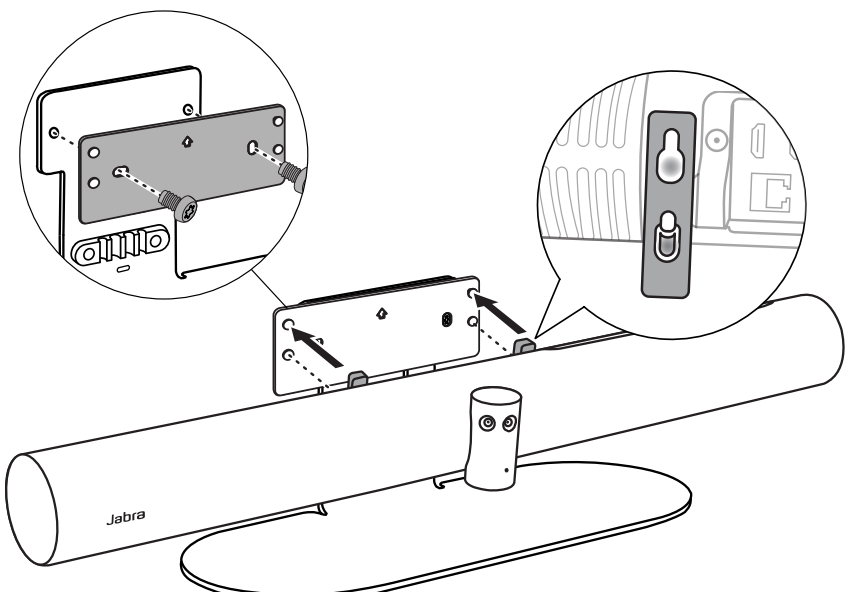

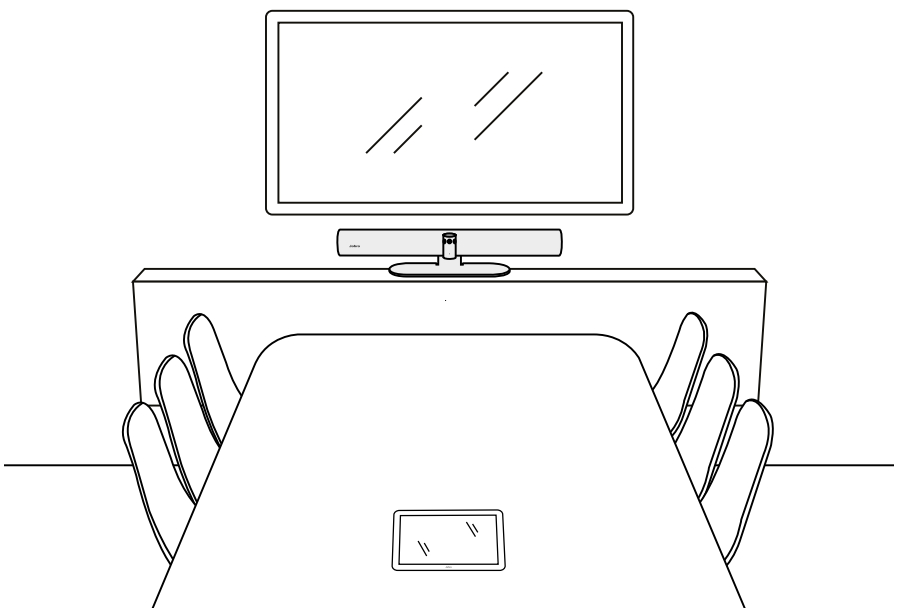

4.4 Height

Use the positioning guide included in the box to ensure the correct distance between the video bar and the screen.

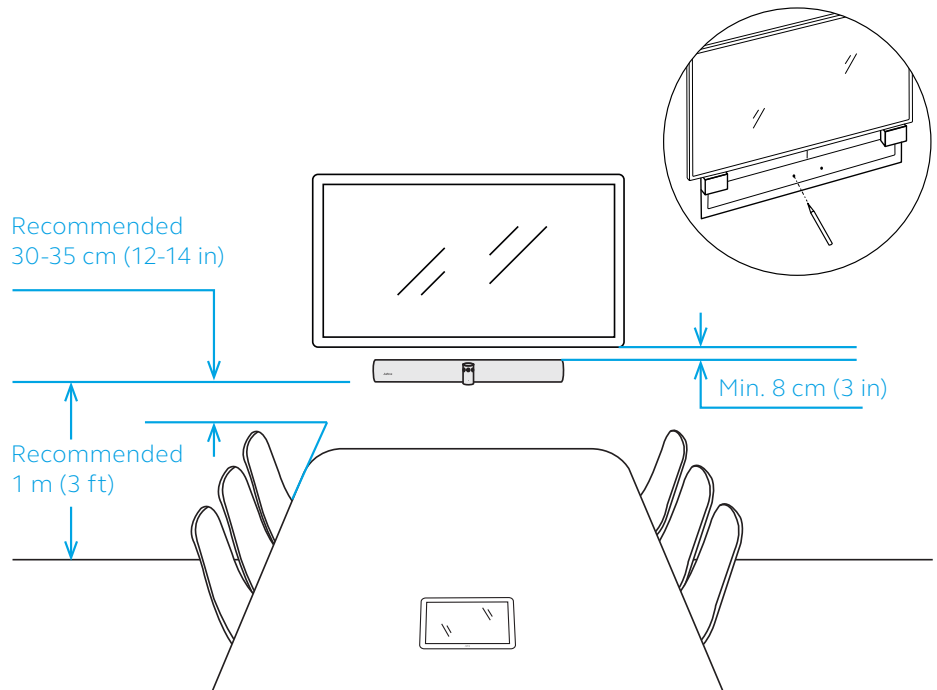

When installing the video bar with the wall mount or screen mount, the camera should be positioned 8 centimeters (3 inches) below the screen and ideally 30-35 centimeters (12-14 inches) above the tabletop or 100 centimeters (3 feet) from the floor. If this height is not possible, it is recommended to install the video bar above the screen.

Do not mount the camera facing direct sunlight as this may affect the preset white balance and compromise the image.

4.5 Touch controller installation

Connect and route the Ethernet cable (PoE) before installing the touch controller.

On the table

Place the touch controller towards the meeting room entrance. This ensures the touch controller will automatically wake up when the proximity sensor detects movement.

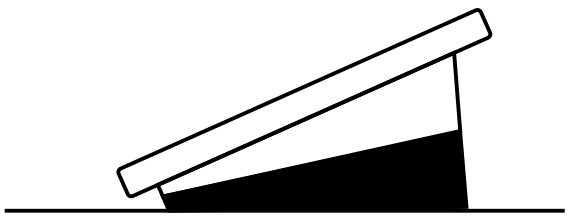

On the wall - flat

Mount the touch controller on a flat surface by using double sided mounting tape or using screws. If the touch controller is installed on a corner, keep a minimum of 10cm (4 inches) free to be able to tighten the screws on the side of the touch controller.

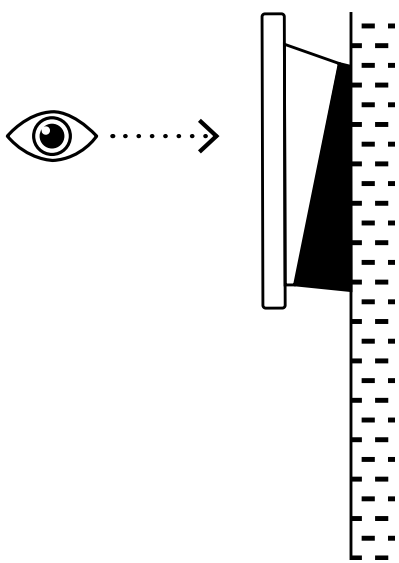

On the wall - angled

Remove the touch controller cover by pressing the release latches. Turn the cover 180°, align the latches correctly and press the cover until you hear a click.

Mount the touch controller in an angled position by using double sided mounting tape or screws.

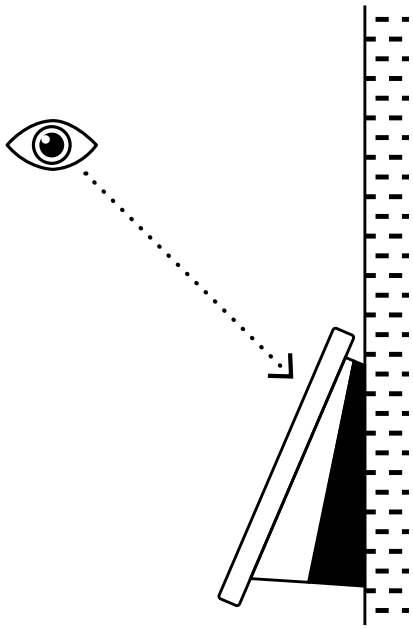

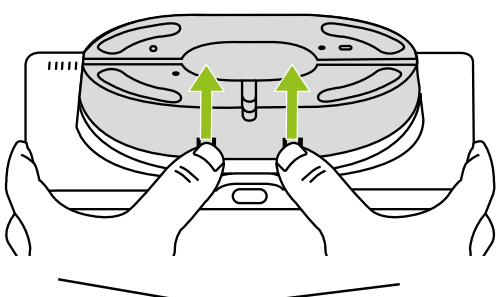

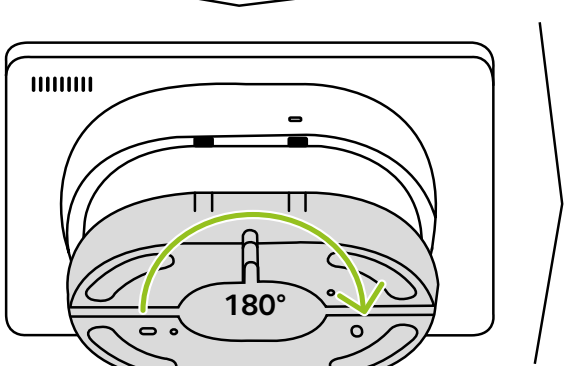

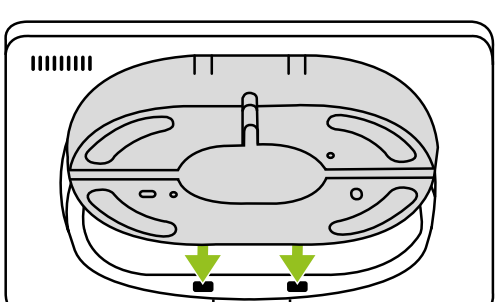

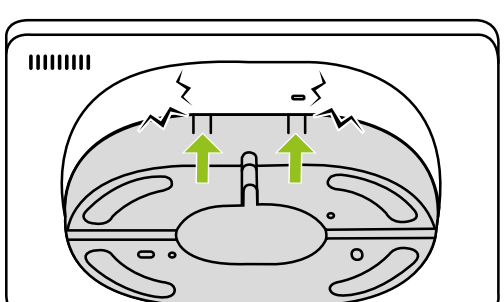

5. Cabling

5.1 Room system

VIDEO BAR CONNECTED TO ONE MONITOR

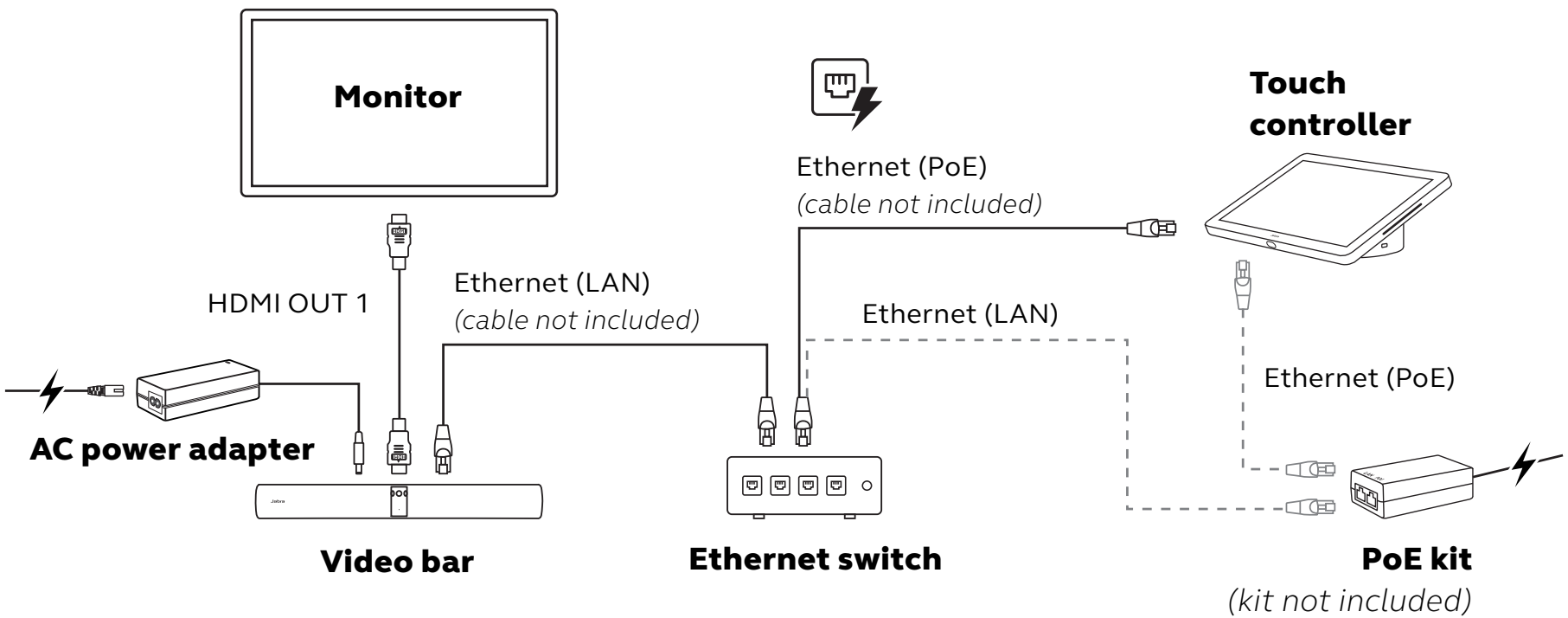

VIDEO BAR CONNECTED TO TWO MONITORS

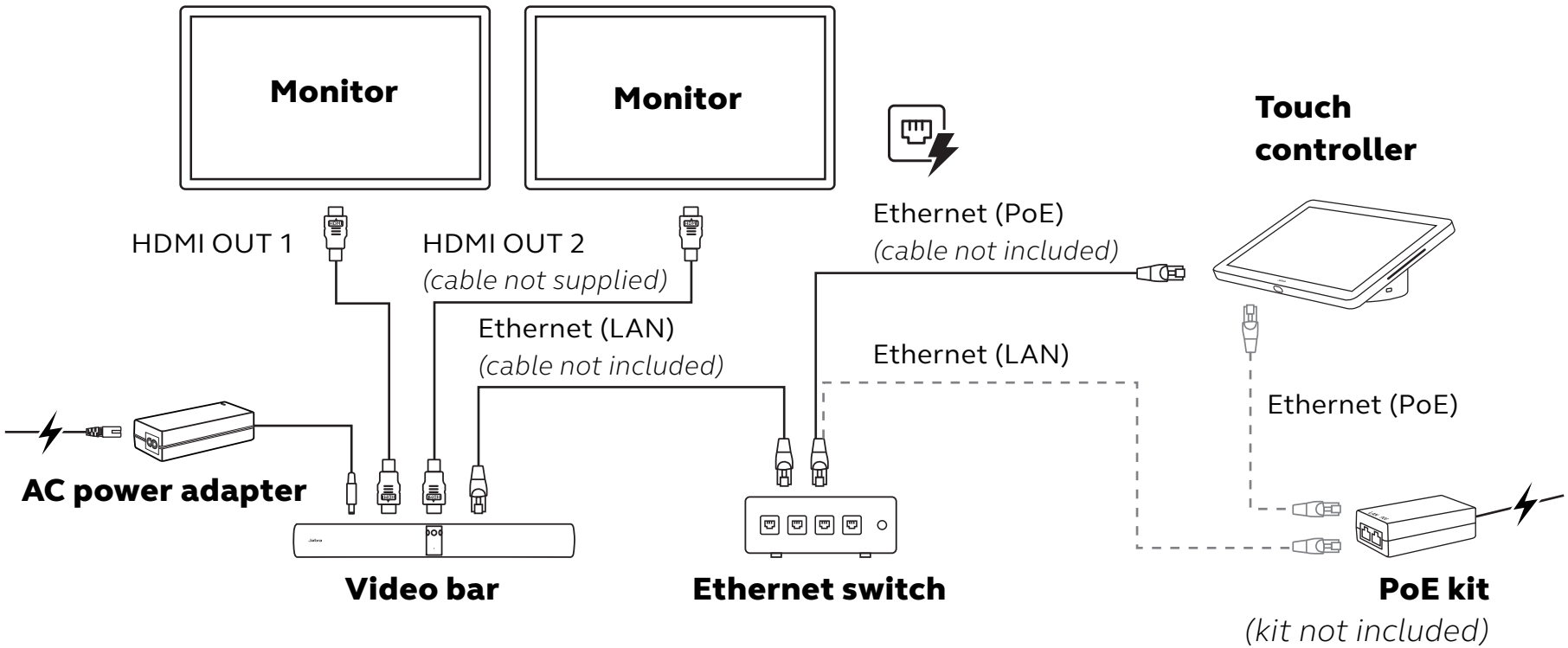

5.2 Room system - video bar only

VIDEO BAR CONNECTED TO ONE MONITOR

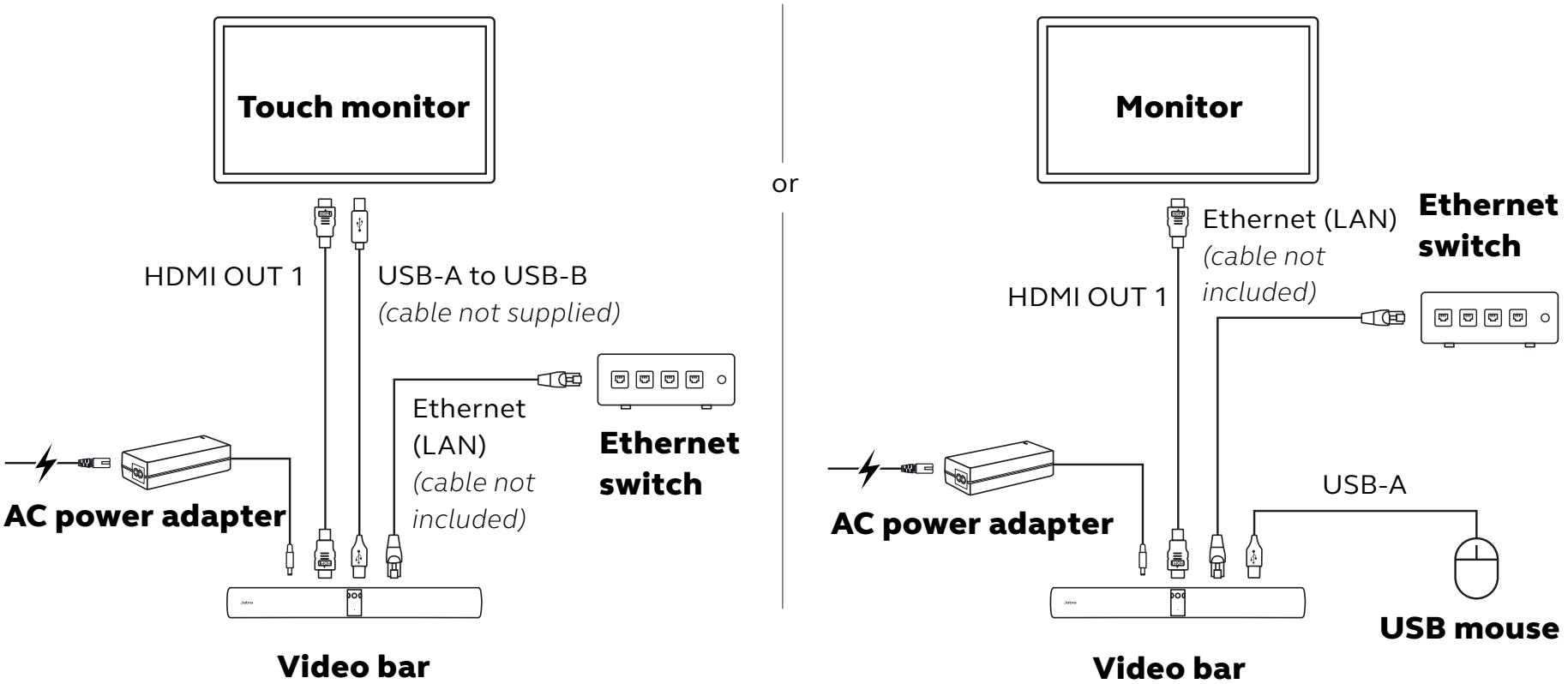

VIDEO BAR CONNECTED TO TWO MONITORS

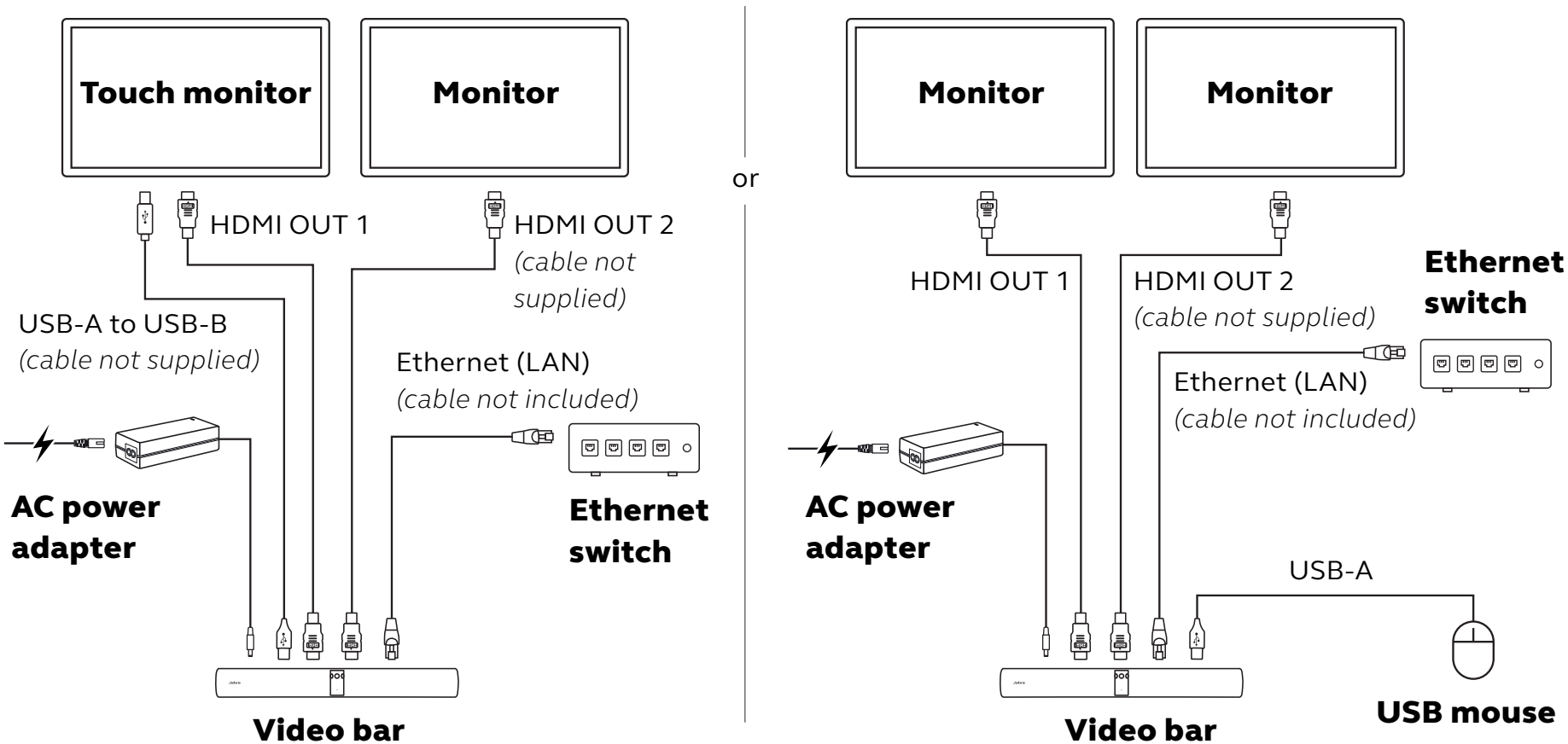

POWERED ETHERNET

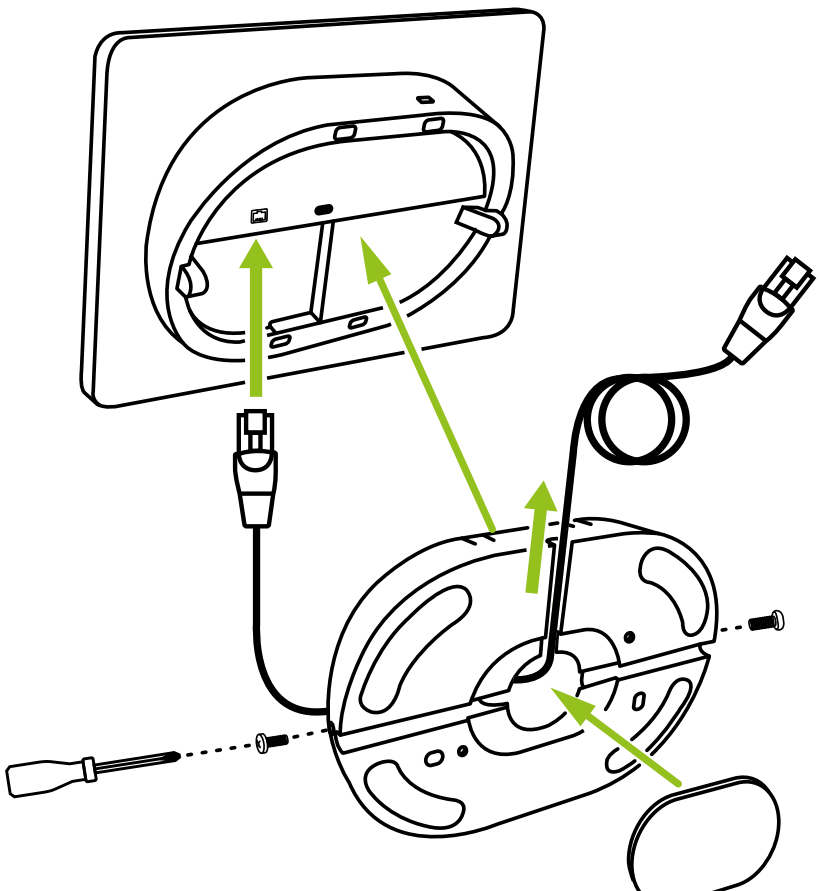

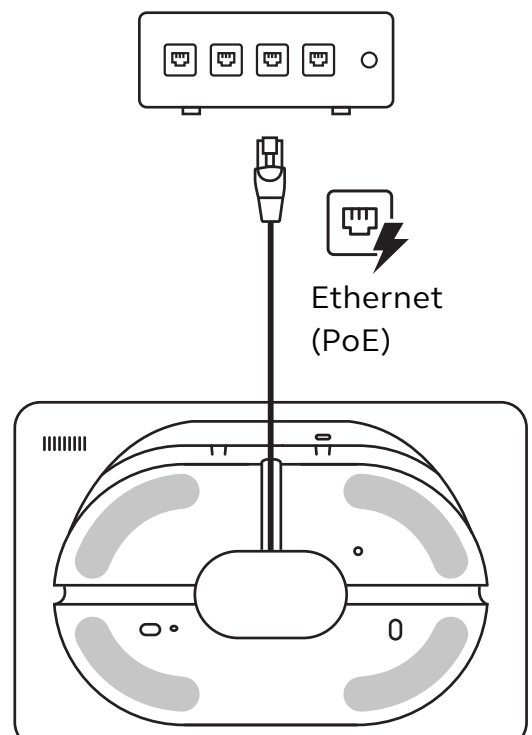

POWER OVER ETHERNET KIT - not included

If the Ethernet connection does not supply power to the touch controller, a PoE injector will need to be connected between the Ethernet switch and the touch controller.

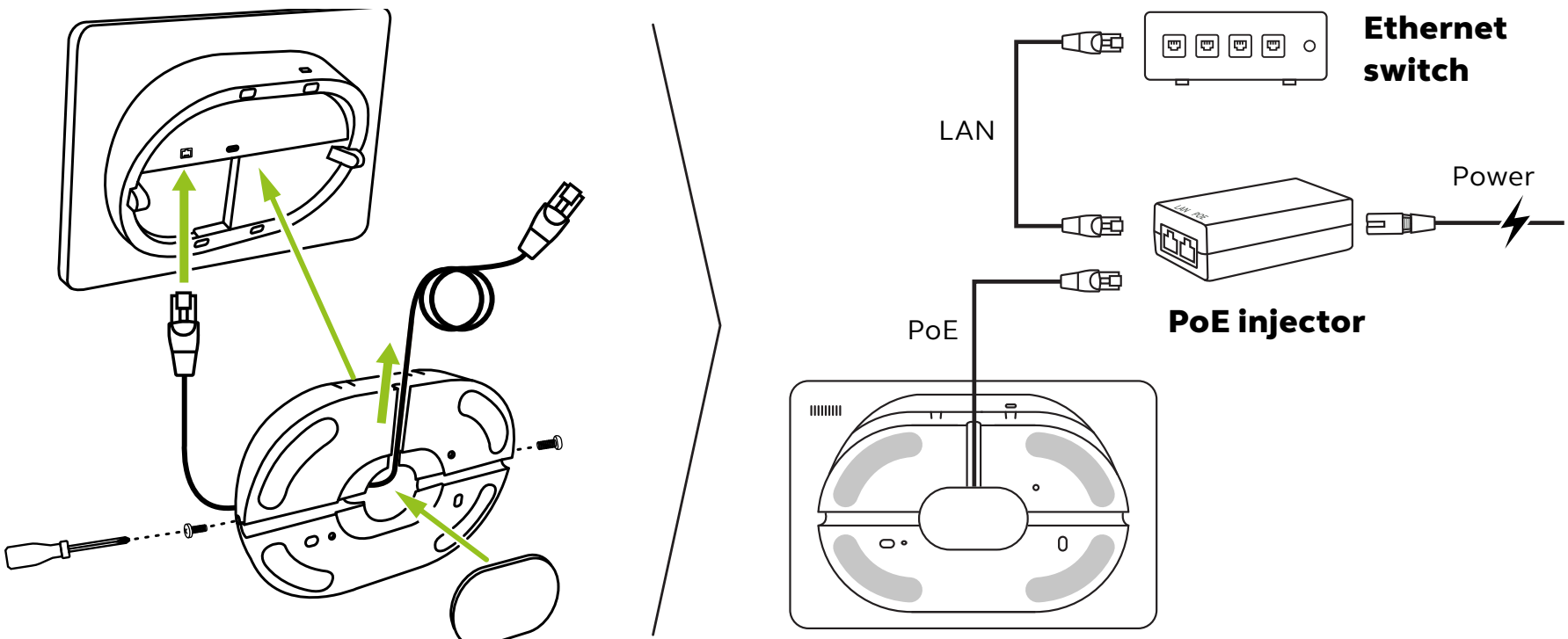

5.4 BYOD (Bring Your Own Device) mode

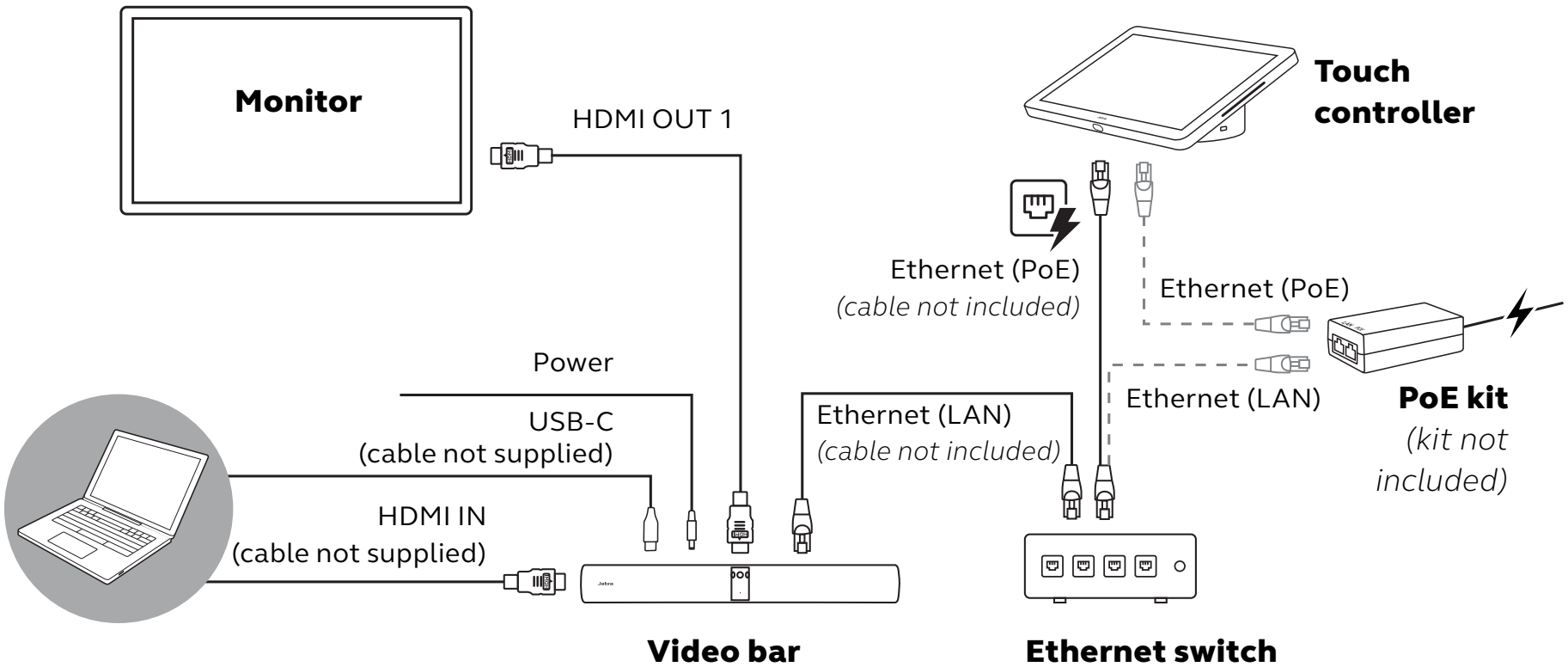

BYOD configuration

1. Log in with the admin username and password using the touch controller.
2. Go to **System** > **Bring Your Own Device** > **Enable BYOD**. This allows meeting participants to start and exit BYOD mode from the touch controller when required.

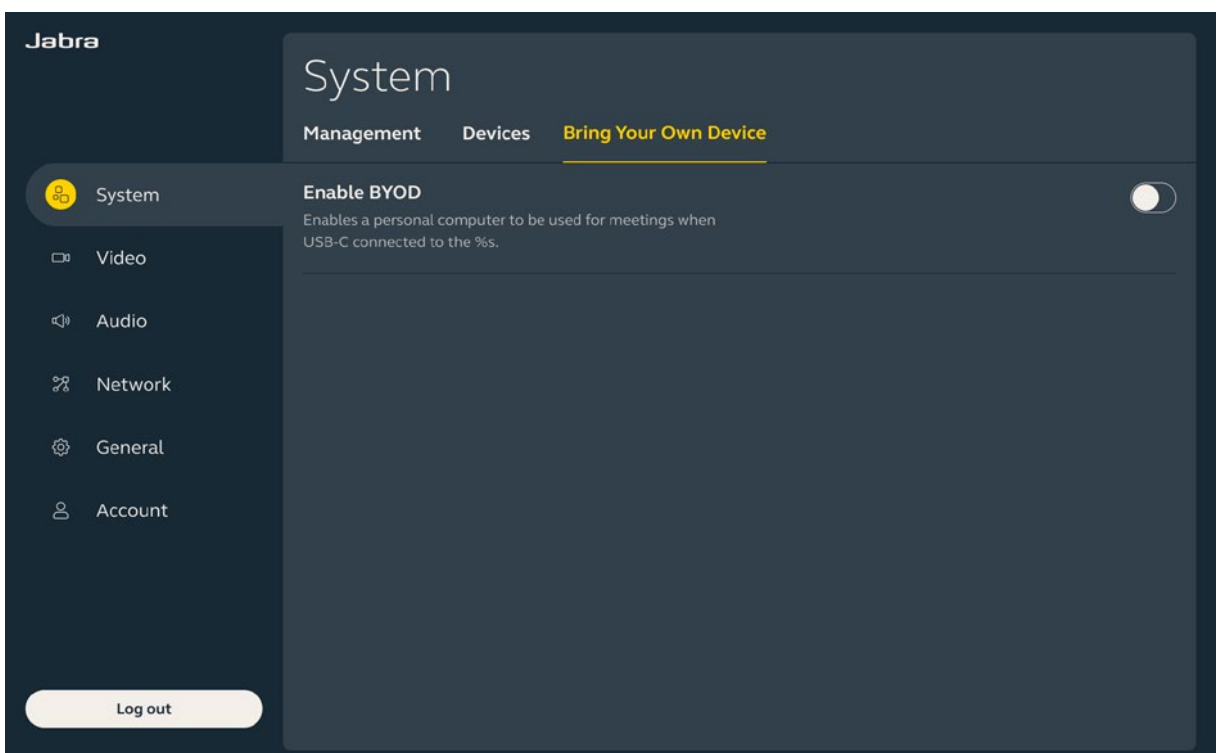

5.5 PanaCast SpeakerMic - optional peripheral

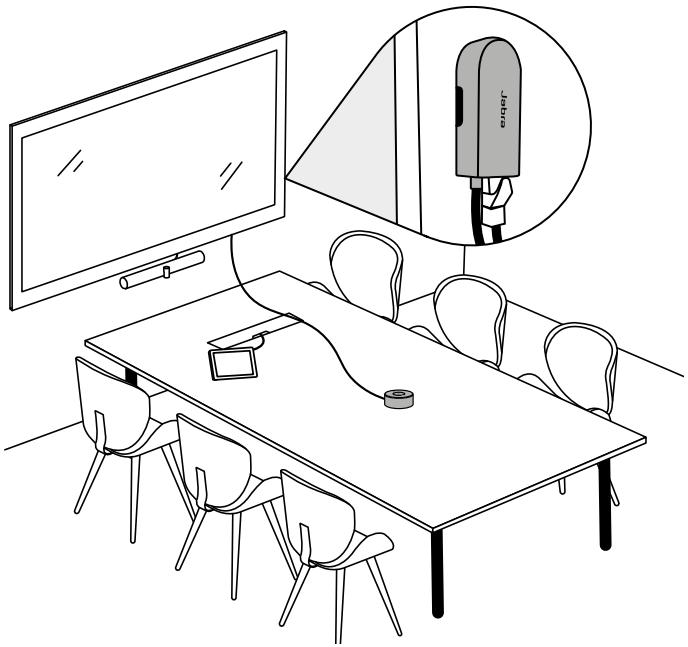

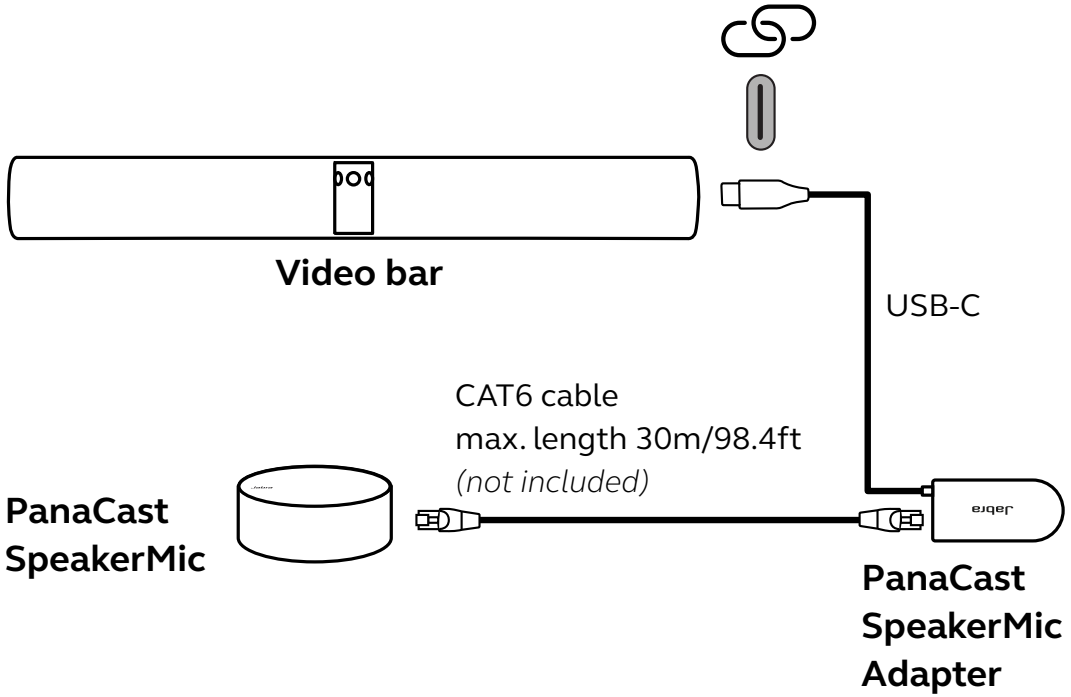

5.6 Huddly L1 - optional peripheral

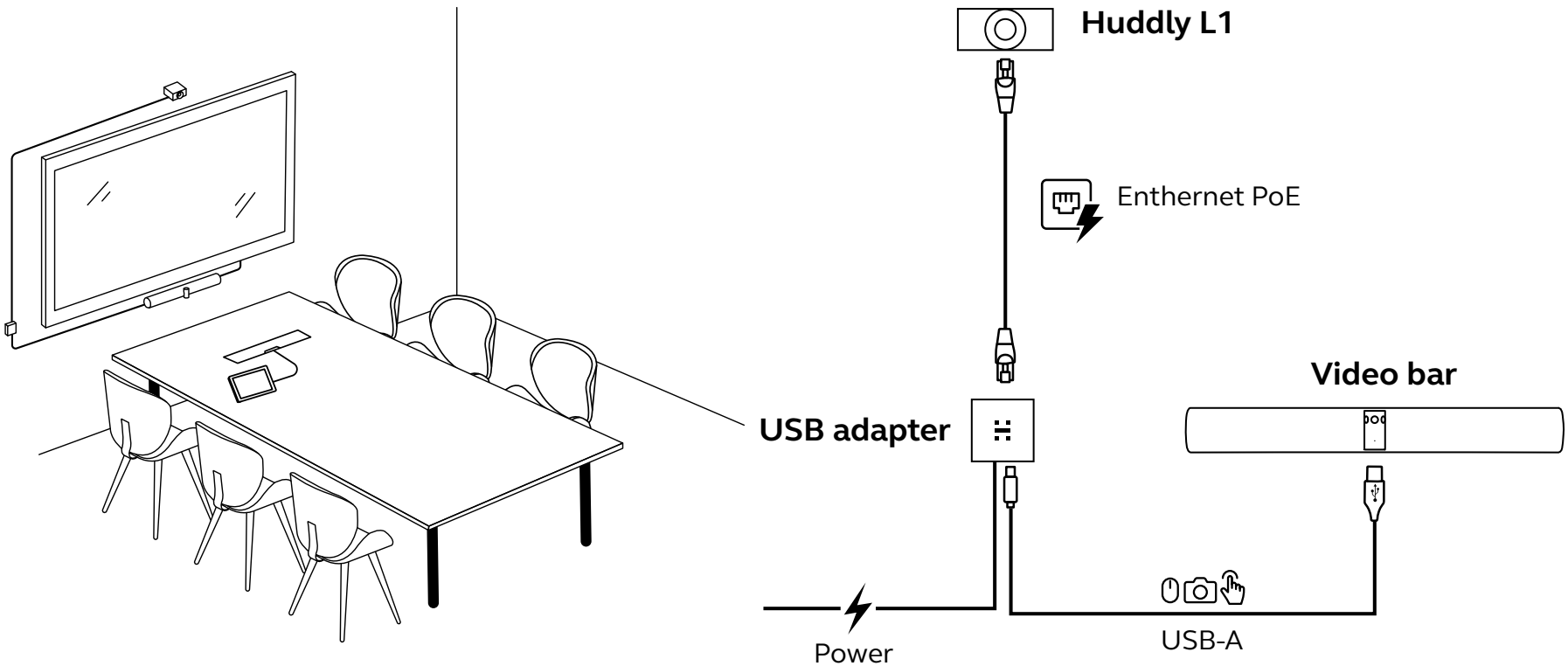

5.7 Huddly crew - optional peripheral

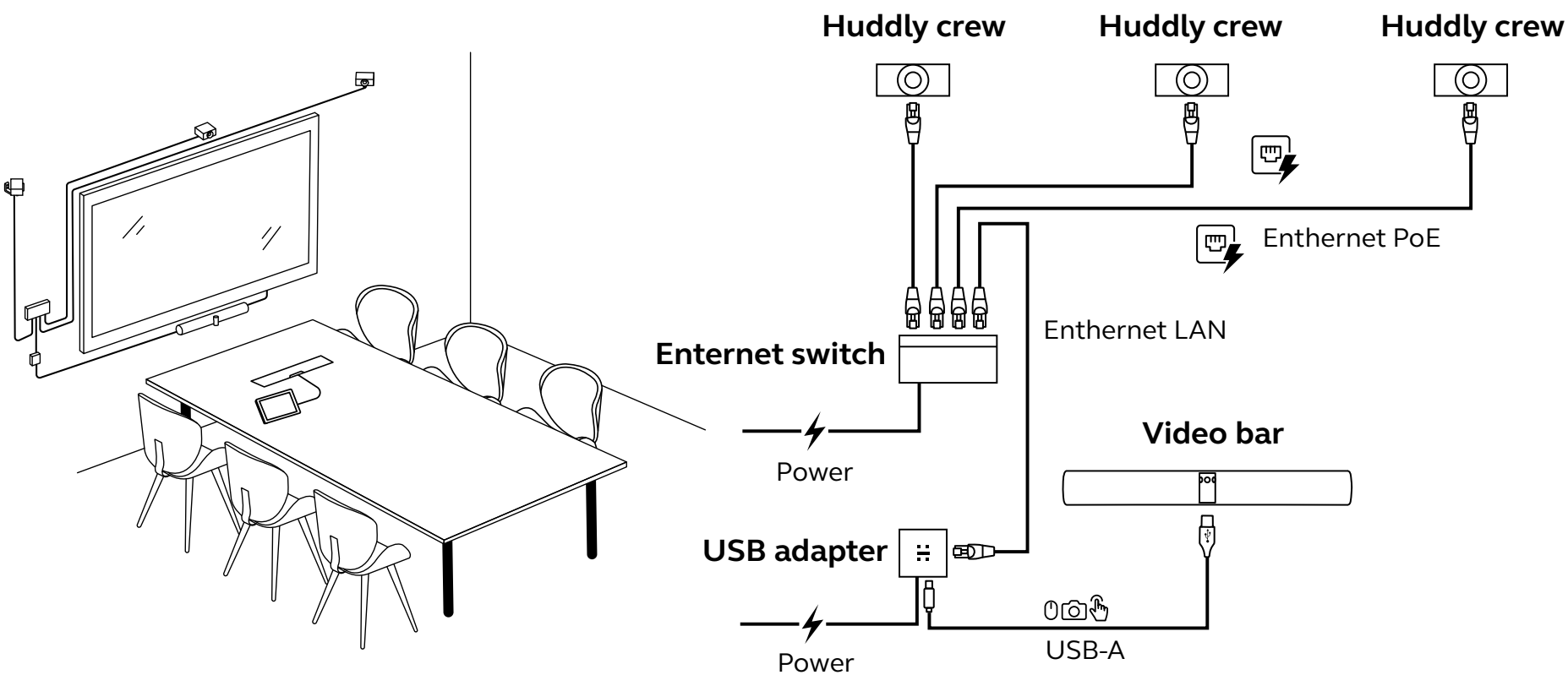

6. Configuring

Before starting the configuration of the PanaCast 55 VBS ensure both the video bar and touch controller are powered on and connected to the same local area network (LAN) or Wi-Fi.

The PanaCast 55 VBS is easily configured by following the Setup wizard, which includes language selection, network configuration, date and time setup, link with Jabra Plus Management, and video service provider login.

To link the PanaCast 55 VBS with an organization in Jabra Plus Management, enter the provisioning code and name the meeting room to identify the device in Jabra Plus Management. The provisioning code is generated in Jabra Plus Management. For more information, go to the *Jabra Plus support* page.

The PanaCast 55 VBS is versatile and can come pre-loaded with native Microsoft Teams Room on Android™ or Zoom Room for Android™*, or without video conference service provider selected.

* Android™ is a trademark of Google LLC.

6.1 Configuration using the touch controller

The PanaCast 55 VBS is easily configured by following the Setup wizard using the touch controller.

The setup includes:

- Language selection
- Ethernet or Wi-Fi network configuration
- Date and time setup
- Pairing between video bar and touch controller, if not already paired
- Firmware update
- Link with an organization in Jabra Plus Management
- Video Service Provider or BYOD selection, if not preselected

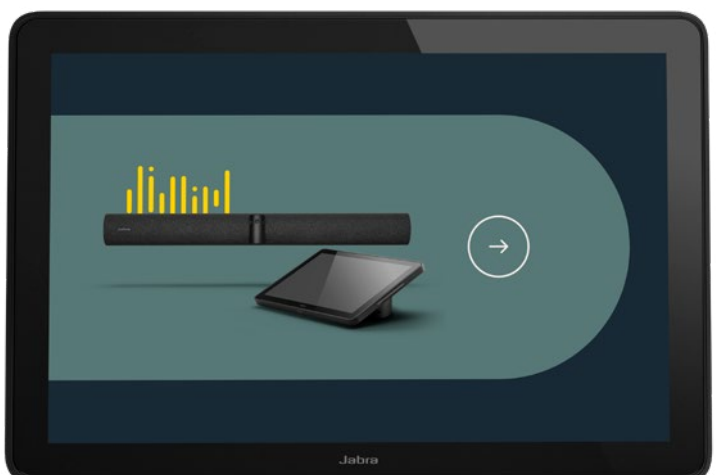

6.2 Configuration using the video bar

The PanaCast 55 VBS can be configured using just the video bar. This configuration method allows you to set up the system when there is no touch controller available. This configuration method requires either a touch monitor or a USB mouse.

The setup includes:

- Language selection
- Ethernet or Wi-Fi network configuration
- Date and time setup
- Firmware update
- Link with an organization in Jabra Plus Management
- Video Service Provider or BYOD selection, if not preselected

7. Pairing of video bar and touch controller

The PanaCast 55 VBS video bar and touch controller are pre-paired and ready to be configured.

If the video bar and touch controller are bought separately or the pairing has been lost, it is necessary to manually pair them.

1. Ensure both the video bar and touch controller are powered on and connected to the same local area network (LAN) or Wi-Fi.
2. Follow the Setup wizard using the touch controller.
3. Select the corresponding video bar from the available devices displayed and pair the devices. The serial number is available on the back of the video bar.

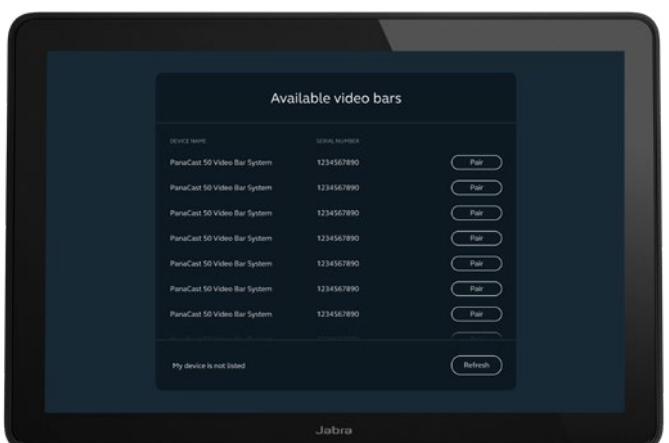

8. Remote management

The PanaCast 55 VBS supports remote management through the Web Console or Jabra Plus Management when it is connected to an Ethernet or Wi-Fi network.

8.1 Web Console

The Web Console can be accessed through a computer by entering the IP address of the video bar or touch controller into a browser. The computer and video bar or touch controller must be connected to the same network.

If this is the first time you are accessing the Web Console, you must change the username and password.

The default username is **admin** and the password is the **last six digits of the serial number of the Jabra device used to access the Web Console**. The serial number is available in **About** > **Device settings** and printed on the box.

If the PanaCast 55 VBS has not been configured, the Web Console will take you through the Setup wizard.

8.2 Jabra Plus Management

Log in to your Jabra Plus account and go to **Meeting rooms** > **Room inventory**. Select the corresponding meeting room and the PanaCast 55 VBS.

For more information, go to the *Jabra Plus support* page.

9. Software

9.1 Operating system

The PanaCast 55 VBS operates on Android™ *.

* Android is a trademark of Google LLC.

10. Restart devices

The video bar and touch controller settings will remain the same when you restart them. The PanaCast SpeakerMic will automatically restart when restarting the PanaCast 55 VBS. You can restart the video bar and touch controller using one of the following options:

Web Console – enter the IP address of the video bar or touch controller in the browser and go to the **General > System reset** menu and select **Restart connected devices**.

Jabra Plus Management – log in using your Jabra Plus account. Go to the **Meeting room** > **Room inventory** menu, select your organization and corresponding meeting room. Go the action menu on the PanaCast 55 VBS video bar or touch controller, and select **Reboot device**.

Admin portal of your video conferencing service provider.

Touch Controller – Go to the **Device settings** menu in your video conferencing app. Go to the **General > System reset** menu and select **Restart connected devices**. The video bar and touch controller will be restarted.

Manual restart of the video bar

Press and hold the **Reset** button on the back of the video bar. Release the button after 5 seconds and a restart message will be displayed on the monitor.

The video bar will restart and play an audio notification when ready for use. The reboot takes approximately 1 minute.

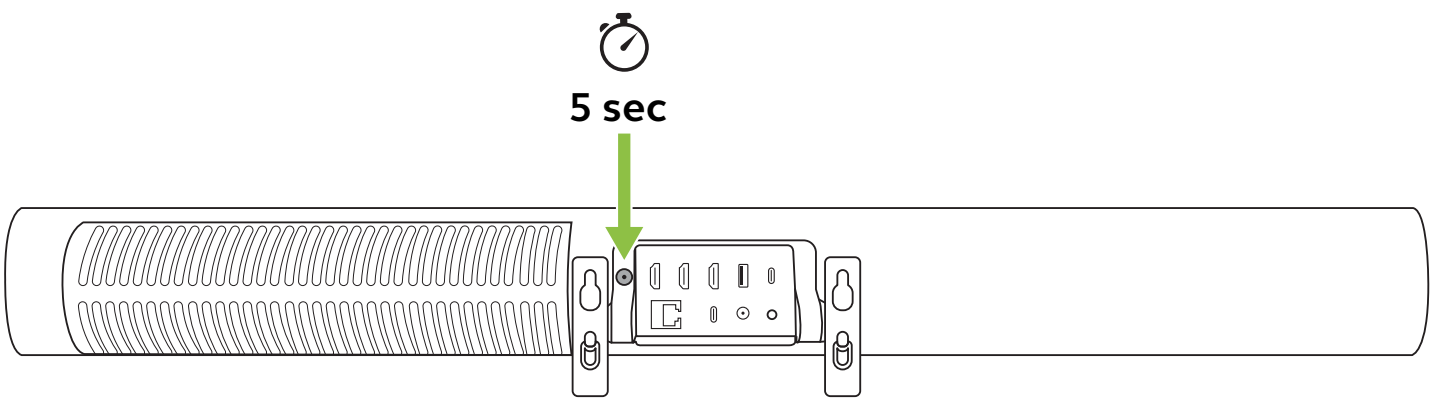

Manual restart of the touch controller

Use a paperclip to press and hold the **Pinhole reset** button on the edge of the screen of the touch controller. Release the button after 5 seconds and a restart message will be displayed on the screen.

The reboot takes approximately 1 minute.

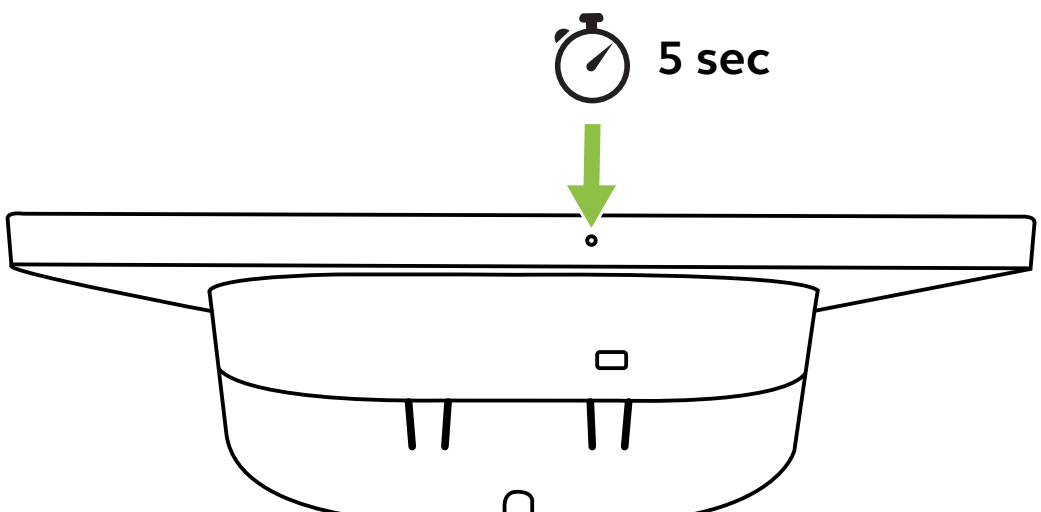

11. Factory reset

Factory reset will restore the touch controller and video bar to their factory default settings and it will be necessary to re-pair the devices.

You can factory reset the video bar and touch controller using one of the following options:

Web Console – enter the IP address of the video bar or touch controller in the browser and go to the **General > System reset** menu and select **Factory reset**.

Touch Controller – Go to the **Device settings** menu in your video conferencing app. Log in as admin and go to the **General > System reset** menu and select **Factory reset**. The video bar and touch controller will be reset.

Manual factory reset of video bar

Individual resetting will restore the video bar to its factory default settings and it will be necessary to re-pair the video bar to the touch controller.

Press and hold the **Reset** button on the back of the video bar for 20 seconds until the LED flashes pink and the factory reset message is displayed on the monitor.

The video bar will restart and play an audio notification when ready for use. The reboot takes approximately 1 minute.

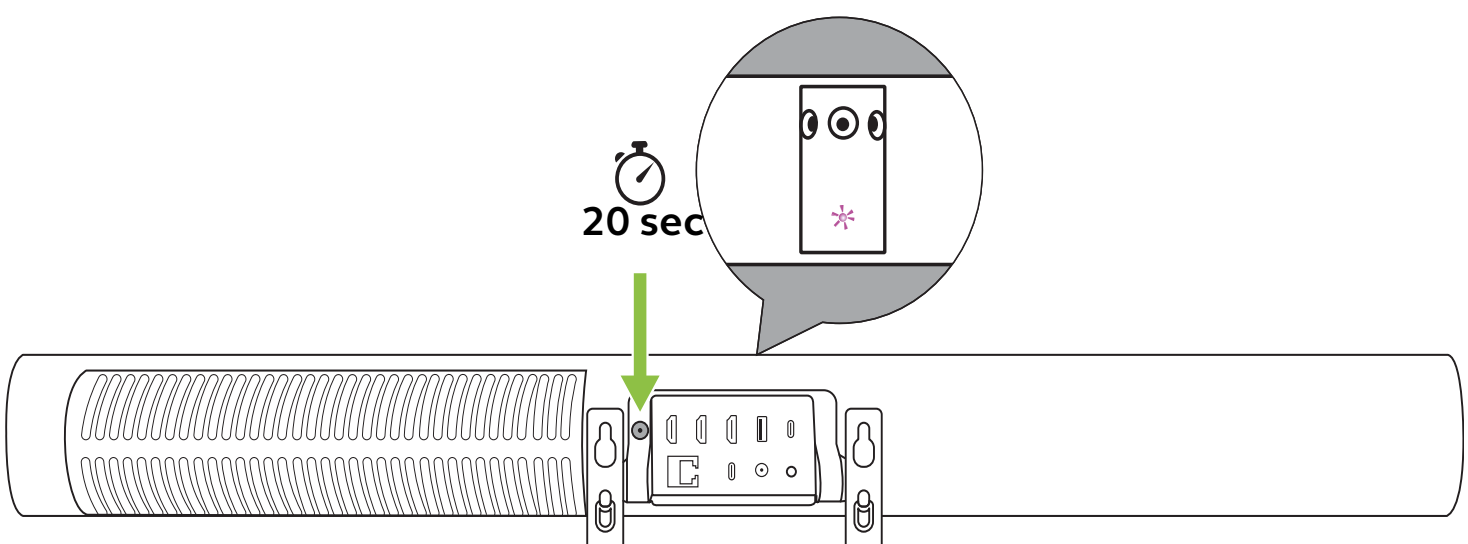

Manual factory reset of the touch controller

Manual factory reset will restore the touch controller to its factory default settings and it will be necessary to re-pair the touch controller to the video bar.

Use a paperclip to press and hold the Pinhole reset button on the back of the touch controller for 20 seconds until the factory data reset message is displayed on the screen.

The reboot takes approximately 1 minute.

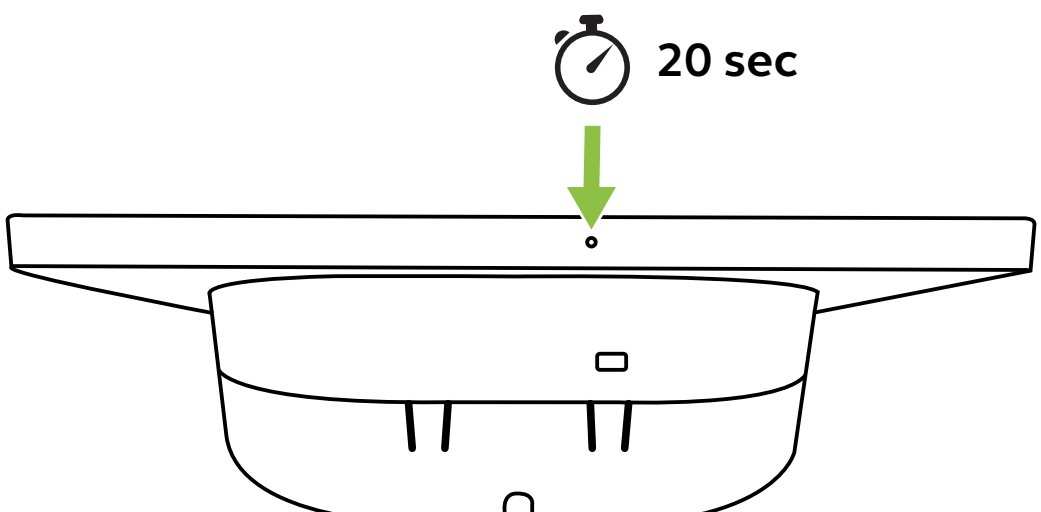

A security code can be configured to prevent users from manually factory resetting the Jabra devices. You can configure it using the Web Console or within the admin settings directly on the device.

Web Console - enter the IP address of the video bar or touch controller in the browser. Log in as an admin and go to **Account** > **Access**.

Touch controller - log in as an admin and go to **Account** > **Access**.

After manually starting the factory reset of the Jabra device, the security code must be entered to complete the factory reset.

12. Languages

The PanaCast 55 VBS is available in the following languages:

-Chinese	-Finnish	-Norwegian	-Turkish
-Czech	-French	-Polish	-Japanese
-Danish	-German	-Russian	-Korean
-Dutch	-Hungarian	-Spanish	
-English	-Italian	-Swedish	

During the Setup wizard, you can select the corresponding language.

You can also change the language by logging in as an admin and selecting **General** > **Region and language** > **Language**.

13. Support

13.1 FAQ and technical specifications

You can view the FAQ, certifications, and technical specifications on the *PanaCast 55 VBS support page*.

13.2 How to care for your Jabra device

The PanaCast 55 VBS is for indoor use only.

- Avoid direct sunlight and temperatures above 40°C/104°F or below 0°C/32°F.
- Do not expose the camera or cables to rain or other liquids.
- Do not position the devices near the vents of a monitor or TV as this may cause the devices to overheat and malfunction.
- Clean the surface with a cloth dampened with a mild soap solution.

Learn more about the ***PanaCast 55 VBS***