Jabra GN

USER MANUAL

PANACAST 55 VBS

Built for work. Designed for freedom.

© 2026 GN A/S. All rights reserved. Jabra® is a trademark of GN group. The Bluetooth® word mark and logos are registered trademarks owned by the Bluetooth SIG, Inc. and any use of such marks by GN A/S is under license.

Made in Thailand

MODEL: VSM040; VTD050

Declaration of Conformity can be found on www.jabra.com/doc

1. Overview 5
1.1 PanaCast 55 VBS bar
1.2 Jabra Control IP
1.3 Included accessories - PanaCast 55 VBS bar
1.4 Included peripherals - Jabra Control IP
1.5 Optional peripherals
1.6 Optional accessories
2. Hardware setup overview 13
3. Visual indicators 15
3.1 Panacast 55 VBS bar
3.2 PanaCast SpeakerMic - optional peripheral
4. Settings management 17
4.1 Intelligent Zoom
4.2 Virtual Director
4.3 Panoramic View
4.4 Single-stream Dynamic Composition
4.5 Smart Gallery - Multi-stream - only for Zoom Rooms
4.6 Field of view
4.7 Pan, Tilt, Zoom presets - available for Zoom Rooms
4.8 Image quality settings
4.9 Video flicker
4.10 Extreme Noise Suppression
4.11 Intelligent Meeting Space
5. Bring Your Own Device (BYOD) mode 24
6. Share content 26
6.1 Wireless content sharing
6.2 Wired content sharing
7. Privacy cover 28
8. Safety capacity settings 29

9. Hearing augmentation with Assistive Listening Devices 30

10. Update firmware 31

11. Restart devices 33

12. Factory reset 36

13. Languages 40

14. Support 41

14.1 FAQ and technical specifications

14.2 How to care for your Jabra device

1. Overview

1.1 PanaCast 55 VBS bar

FRONT

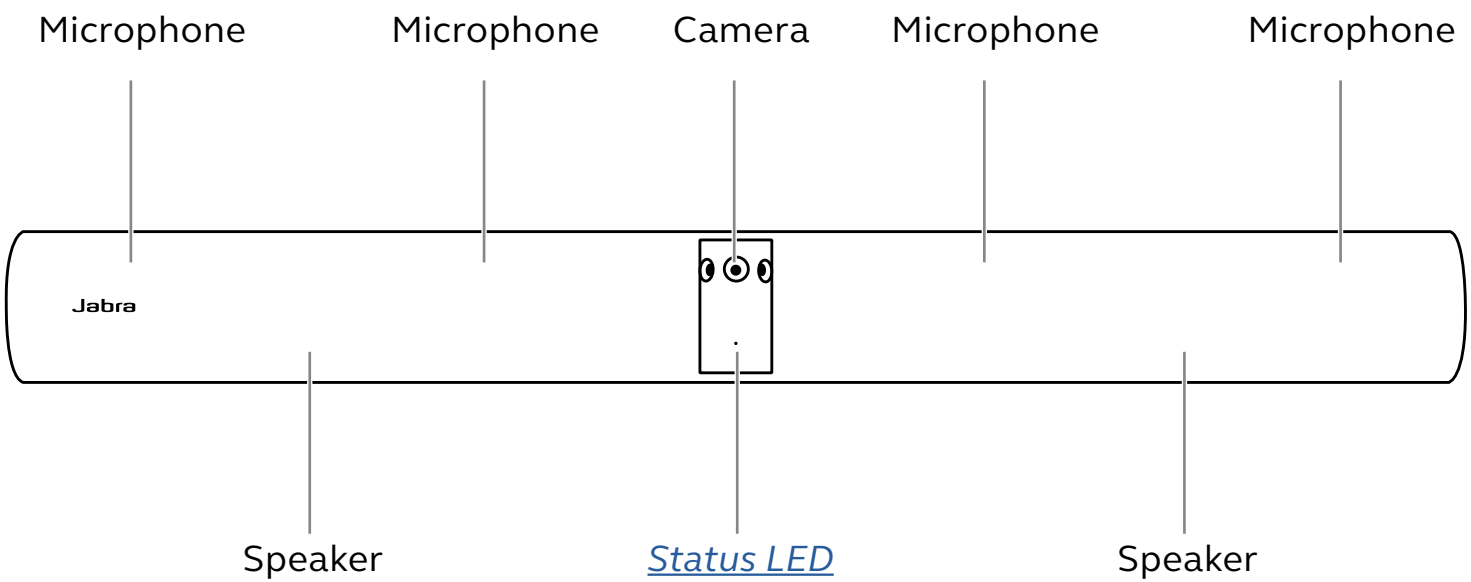

SECURITY NOTE: microphones and cameras can be used to record private conversations and footage.

BACK

PORT CONNECTIONS

- HDMI for wired content sharing
- HDMI OUT for second monitor
- HDMI OUT for monitor
- USB-A for touchscreen, USB mouse or optional peripherals
- USB-C for PanaCast SpeakerMic or optional peripherals
- Ethernet network
- USB-C for BYOD
- Power
- AUX OUT for assistive listening devices

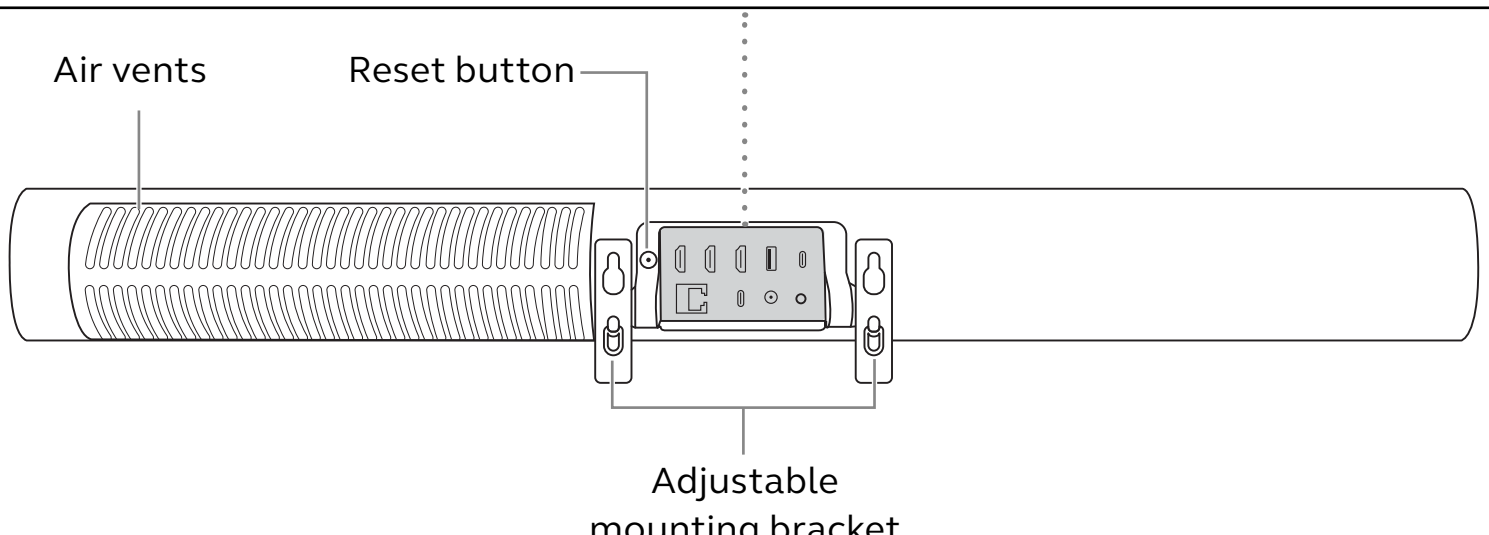

SECURITY NOTE: Bluetooth, Ethernet or Wi-Fi connections can potentially be used to transfer data to unauthorized devices.

1.2 Jabra Control IP

FRONT

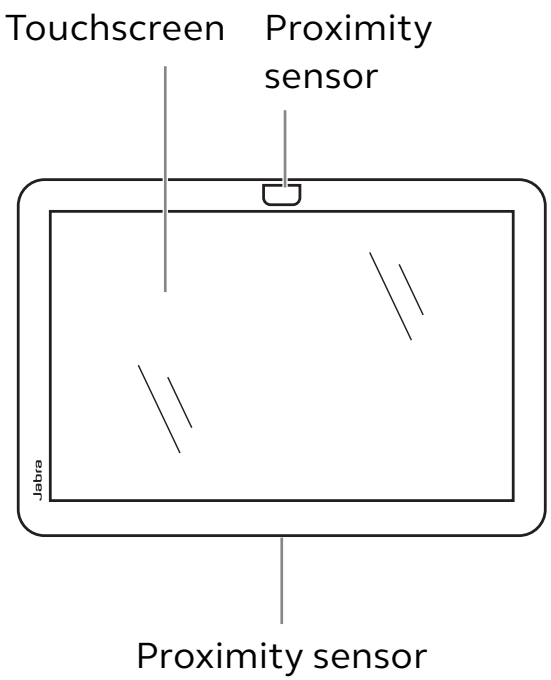

BACK

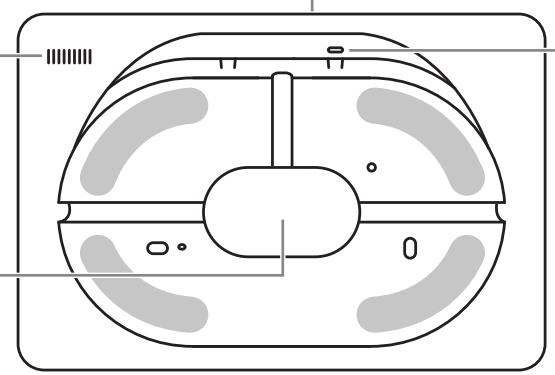

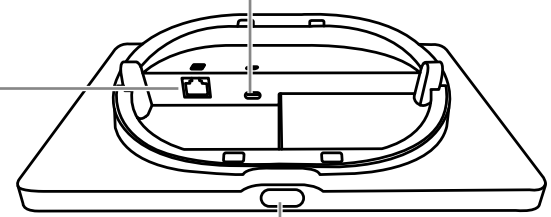

SECURITY NOTE: sensors can potentially be used to detect the presence of a user.

1.3 Included accessories - PanaCast 55 VBS bar

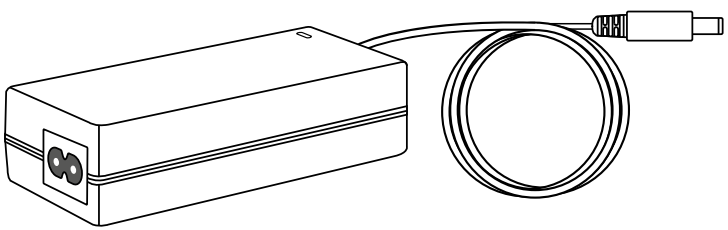

AC power adapter *(1.8m/6ft)*

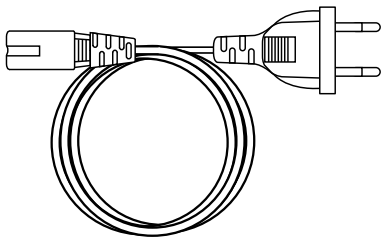

AC power cable *(1m/3.2ft)*

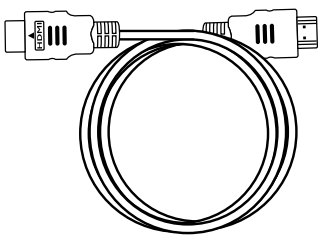

HDMI 2.0 Premium High Speed cable *(1.8m/6ft)*

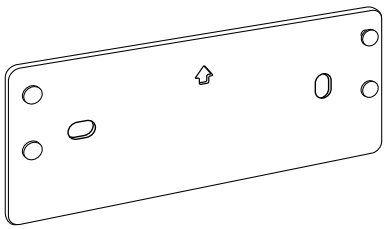

Video bar mount

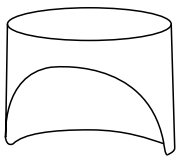

Camera privacy cover

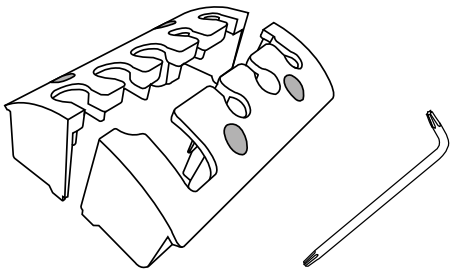

Cable compartment cover *(2 pcs)* **with embedded screws & screwdriver**

Additional accessories can be purchased at *jabra.com/accessories*.

1.4 Included peripherals - Jabra Control IP

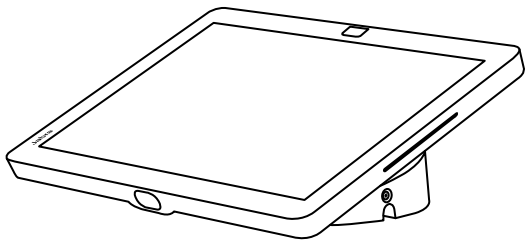

Jabra Control IP

The Jabra Control IP can also function as a Jabra Scheduler if required.

1.5 Optional peripherals

Additional peripherals can be purchased at *jabra.com/accessories*

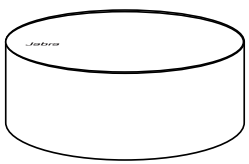

PanaCast SpeakerMic

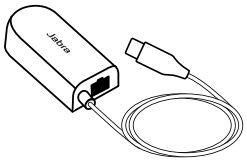

PanaCast SpeakerMic Adapter

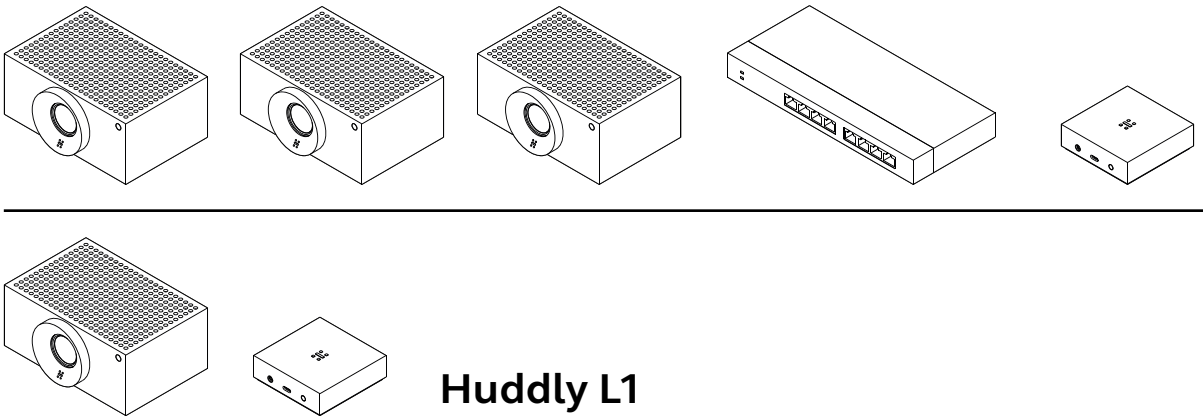

Huddly crew

Huddly L1

More information on add-on cameras *here*.

1.6 Optional accessories

Accessories can be purchased at *jabra.com/accessories*

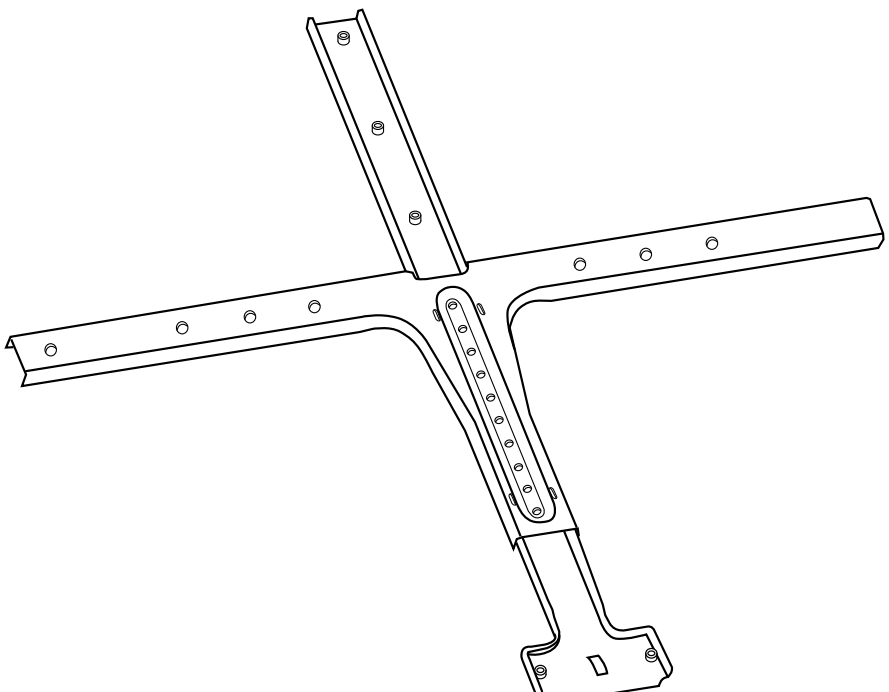

Screen mount

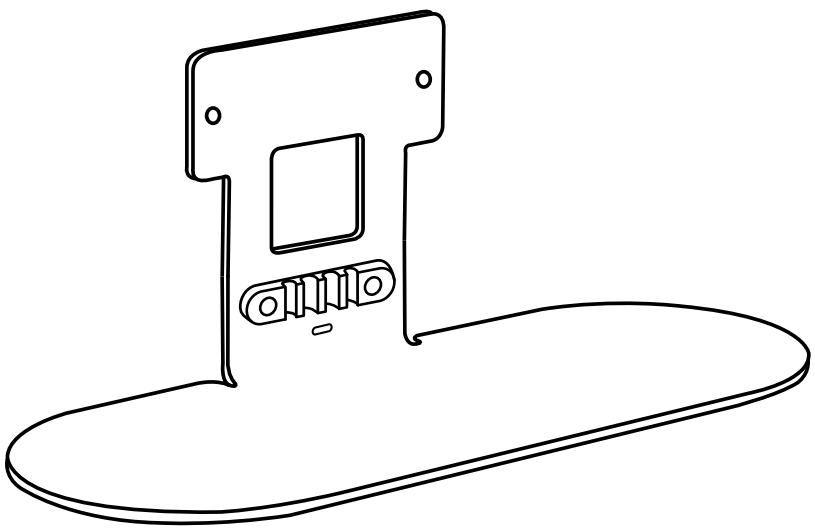

Table stand

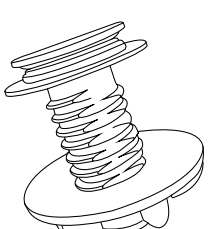

Jabra Control IP table mount

Accessories can be purchased at *jabra.com/accessories*

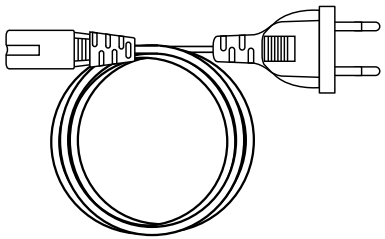

Regional power cords*(1m/3.2ft)*

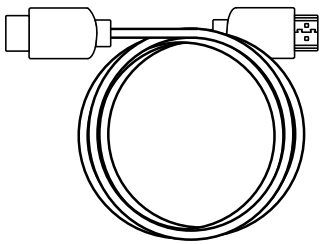

HDMI cable *(1.8m/6ft)*

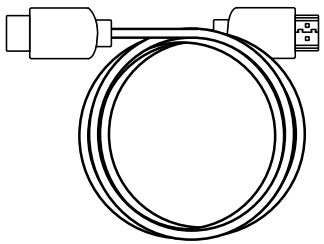

HDMI ingest cable *(4.5m/15ft)*

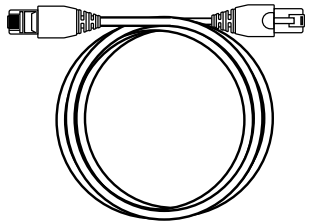

RJ45 Ethernet cable *(4.5m/15ft)*

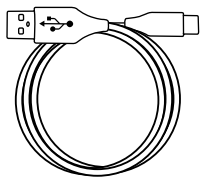

USB-A to C cable *(4.5m/15ft)*

POWER OVER ETHERNET (PoE) KIT

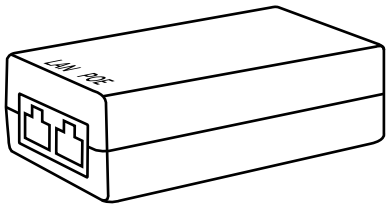

PoE injector

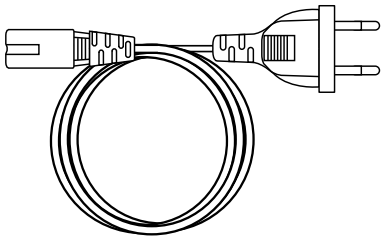

AC power cable *(1m/3.2ft)*

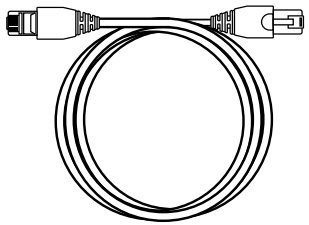

RJ45 Ethernet cable *(4.5m/15ft)*

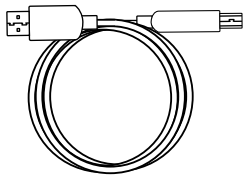

USB-A to B cable *(1.8m/6ft)*

2. Hardware setup overview

This is an overview of the steps required to set up the PanaCast 55 VBS.

1. **Mount the video bar.**
   Visit the *PanaCast 55 VBS* support page for manuals, assembly videos, instructions, technical specifications, and additional resources.
2. **Connect the cables.**
   Refer to the cabling instructions available in the Installation manual.
3. **Set up the touch controller.**
   After the device powers on, follow the setup wizard displayed on the touch controller. During the last step of the configuration, it is necessary to log into the video conferencing account of your service provider.
4. **Manage settings and devices locally** using the touch controller or remotely using the Web Console or Jabra Plus Management.

   Touch controller
   Go to **Teams/Zoom settings** > **Device settings**. Log in as an administrator.

If this is the first login, you must change the username and password. The default username is **admin** and the password is the **last 6 digits of the serial number of the touch controller**.

Web Console

Enter the IP of the video bar or touch controller in a browser. If this is the first time you are accessing the Web Console, you must change the username and password. The default username is **admin** and the password is the **last 6 digits of the serial number of the device used to access the Web Console**.

Jabra Plus Management

Log in with your Jabra Plus account. Go to **Meeting rooms** > **Room inventory**. Select the corresponding meeting room and PanaCast 55 VBS.
For more information, go to the *Jabra Plus support* page.

3. Visual indicators

3.1 Panacast 55 VBS bar

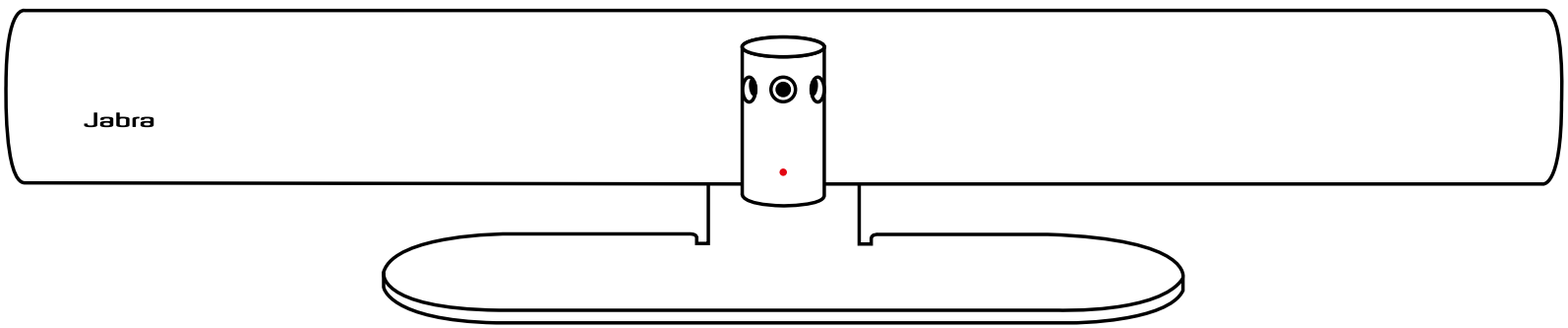

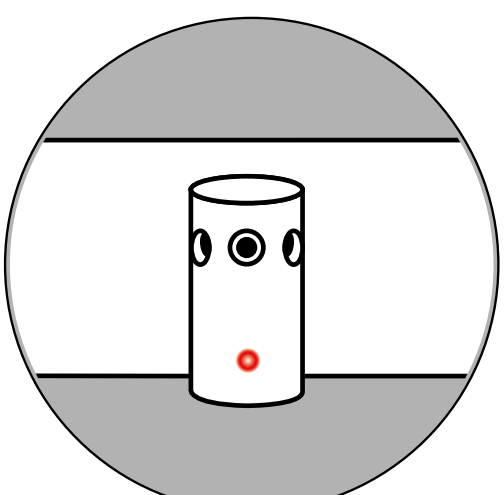

LED STATUS

Off or not streaming		(LED off)
Starting up	○	(flashing white)
Connected	○	(on for 3 seconds)
In call or streaming video/media	●	
In call, audio muted	●	
Firmware updating	●	(flashing pink)

3.2 PanaCast SpeakerMic - optional peripheral

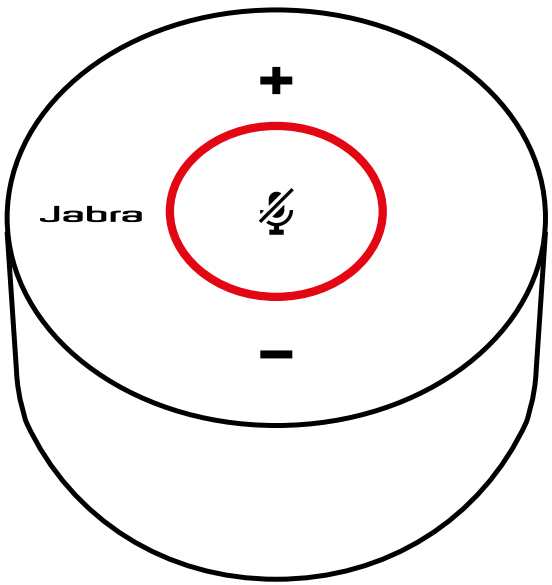

STATUS LED RING

No active call		(LED off)
Starting up	○	(flashing white)
In call	●	(solid green)
In call, speaker muted	●	(solid red)
Factory reset / firmware update	✳	(flashing pink)
No communicatoin with PanaCast 55 VBS	✳	(flashing red)

4. Settings management

After the PanaCast 55 VBS setup wizard is completed, the touch controller will display the video conferencing app of your service provider.

To access the PanaCast 55 VBS settings, go to **Teams/Zoom settings** > **Device settings**.

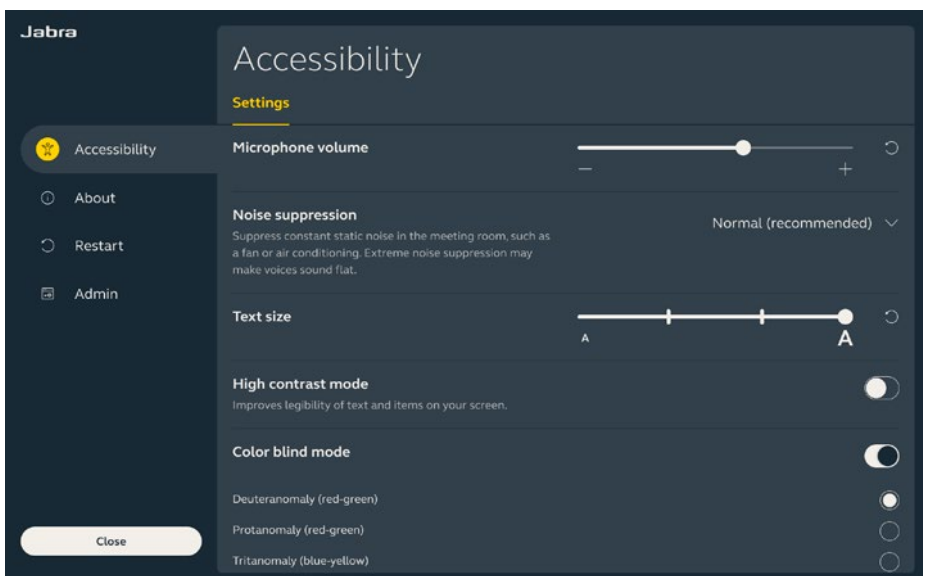

Basic settings and **general information** of the touch controller will be displayed.

Advanced settings are available when logging in as an administrator. If this is the first login, the default username is **admin** and the password is the **last 6 digits of the touch controller serial number**.

All PanaCast 55 VBS settings can be configured using the Web Console.

4.1 Intelligent Zoom

Intelligent Zoom is a camera mode that dynamically frames all visible people in the meeting room.

Only one camera mode can be active at a time. By default, the camera mode is set to Intelligent Zoom.

4.2 Virtual Director

Virtual Director is a camera mode that dynamically switches to and focuses on the person who is speaking.

4.3 Panoramic View

Panoramic View is a camera mode that displays a panoramic view of the meeting room.

4.4 Single-stream Dynamic Composition

Single-stream Dynamic Composition is an advanced camera mode that displays a tiled view of up to four speakers and a full room view. The tiled view will dynamically update to display the participants who are actively speaking.

4.5 Smart Gallery - Multi-stream - only for Zoom Rooms

The PanaCast 55 VBS creates individual streams of in-room participants, as well as full room view, so each in-room participant gets their own stream in a Zoom meeting. The tiled view will dynamically update to highlight the participant who is actively speaking.

To select this video mode, go to **Zoom Room** settings and select **Multi-stream** option.

To hide the panoramic view and only display the individual video streams, go to **Zoom Room** settings and select **Hide Room View**.

4.6 Field of view

The angle of the camera is set to a 180° view of the meeting room.

4.7 Pan, Tilt, Zoom presets - available for Zoom Rooms

Pan, Tilt, Zoom presets allow users to adjust and save the camera view using the touch controller. Saved presets do not overwrite the default Pan, Tilt, Zoom settings. Users can select saved presets when a new meeting starts. Zoom controls are only available when using panoramic view mode.

4.8 Image quality settings

The image brightness, contrast, saturation, sharpness, and white balance can be adjusted in the Web Console or using the touch controller through the admin device settings.

Additionally, Vivid HDR and Automatic white balance can be enabled. If Vivid HDR is enabled, contrast, saturation, and sharpness cannot be adjusted manually. If Automatic white balance is enabled, the white balance cannot be adjusted manually.

4.9 Video flicker

Video flicker can occur if the PanaCast 55 VBS is not set to the correct geographical region. If you encounter video flicker, select Auto (50Hz/60Hz) for regions that support NTSC format, or 50Hz for regions that support PAL format.

By default, **Video flicker** is set to Auto.

4.10 Extreme Noise Suppression

The PanaCast 55 VBS provides noise suppression which addresses noise, echo cancellation and suppresses constant static noise, such as a fan or air conditioning.

Based on the meeting room conditions, you can enable Extreme Noise Suppression to suppress all background noise. Extreme Noise Suppression may make voices sound flat.

4.11 Intelligent Meeting Space

Define a customized boundary that can be applied to a meeting space. This will ensure that only people within this boundary will be considered as meeting room participants.

Intelligent Meeting Space is especially useful for meeting rooms that have glass walls.

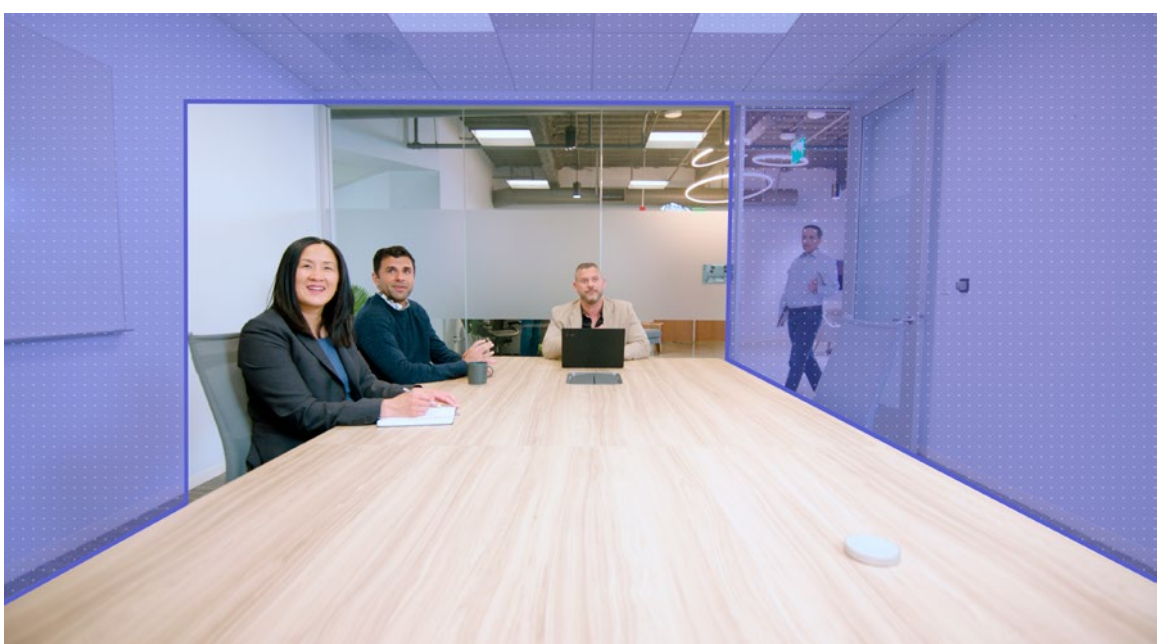

5. Bring Your Own Device (BYOD) mode

BYOD mode allows hosting a meeting from a computer and not from the PanaCast 55 VBS. To enable BYOD mode, go to the **Admin** menu and log in as an administrator. If this is the first login, the default user name is **admin** and the password is the **last 6 digits of the serial number of the Jabra device**.

Go to **System** > **Bring Your Own Device** > **Enable BYOD**. This allows meeting participants to start and exit BYOD mode from the Jabra device when required.

After enabling BYOD mode, it will be automatically available when connecting a personal computer to the video bar via USB-C. The camera, microphone and speakers from the video bar will be used during the meeting. To view the personal computer screen on the meeting room monitor, connect a HDMI cable between the video bar and the computer.

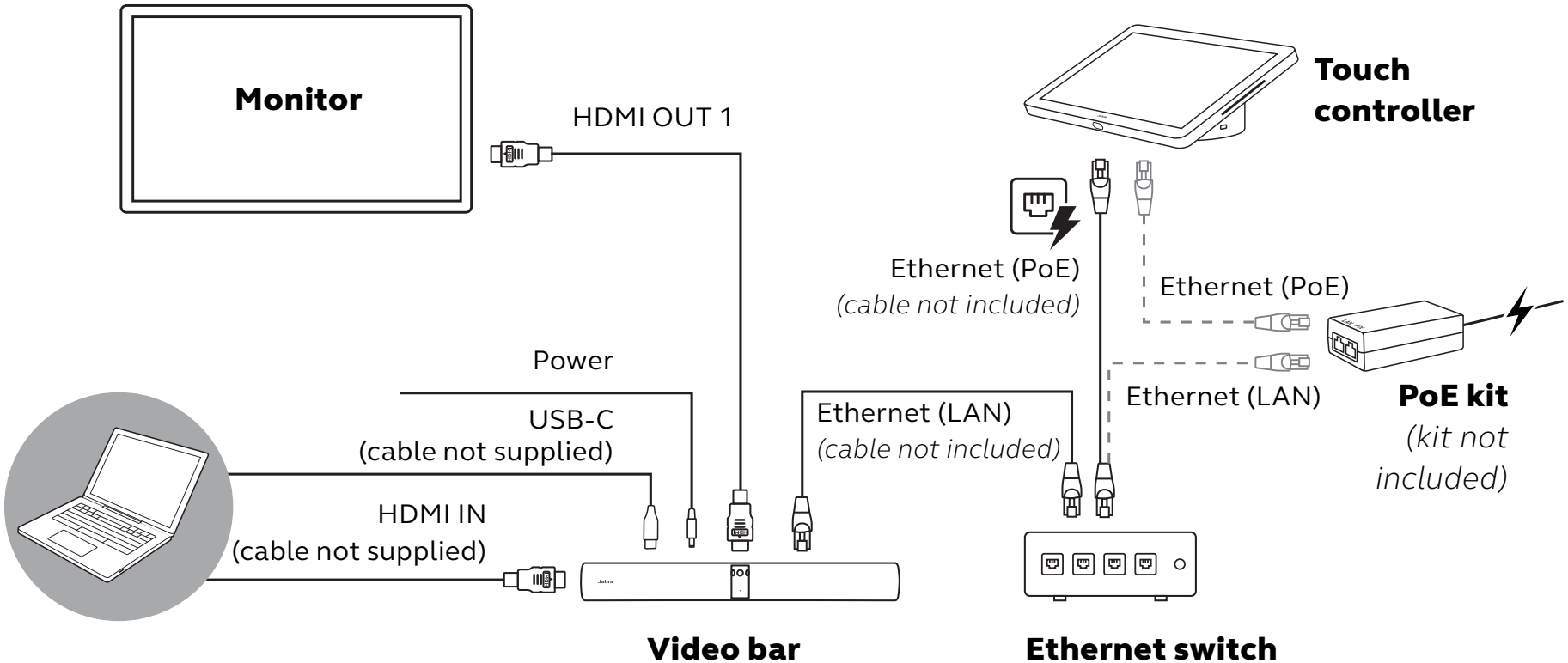
Monitor
HDMI OUT 1
Touch controller
Ethernet (PoE)
(cable not included)
Ethernet (PoE)
Power
USB-C
(cable not supplied)
Ethernet (LAN)
(cable not included)
Ethernet (LAN)
PoE kit
(kit not included)
HDMI IN
(cable not supplied)
Video bar
Ethernet switch

6. Share content

6.1 Wireless content sharing

The PanaCast 55 VBS allows users to **share content** when connected to a wireless network through the video conferencing service provider. The share content feature must be enabled in the video conferencing app.

For more information on how to share content wirelessly, go to the support page of your video conferencing service provider.

The video bar and touch controller have Bluetooth® technology that allows the video conferencing service provider to discover and authenticate the meeting rooms when joining meetings. The Bluetooth feature can be disabled when logged in as an administrator in **Network** > **Bluetooth**.

6.2 Wired content sharing

Connect an HDMI cable from the computer to the **HDMI IN** port on the back of the video bar. The content from the computer will be displayed in the meeting and on the room monitor connected to the video bar.

Additional HDMI cables are not supplied and can be purchased on the *Jabra's accessories* page.

7. Privacy cover

When the video bar is not in use, the privacy cover can be used to cover the lenses of the camera.

Remove the privacy cover when streaming videos to avoid flickering, which may be triggering for photosensitive individuals.

To stop the video feed during the meeting, users can use the in-meeting controls in the video conferencing application.

8. Safety capacity settings

The PanaCast 55 VBS works together with the video conferencing app to monitor the safety capacity limit of a meeting room.

These settings are configured and managed directly in the admin portal of your video conferencing service provider.

9. Hearing augmentation with Assistive Listening Devices

The PanaCast 55 VBS aux-out feature allows the connection of Assistive Listening Devices to improve accessibility in meeting rooms for people with hearing loss.

To enable this setting, go to **Audio** > **AUX port**.

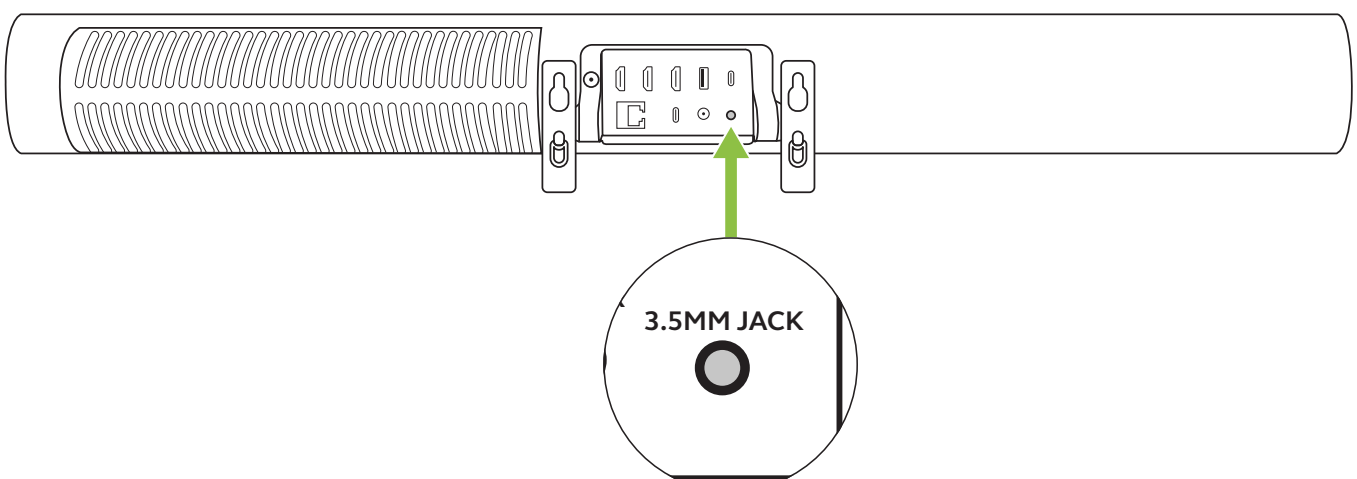

10. Update firmware

Firmware updates improve performance or add new functionality to Jabra devices. PanaCast 55 VBS firmware updates can be done:

- Locally on the video bar (mouse or touch screen monitor required)
- Locally on the paired touch controller
- Remotely using the Web Console(s) for the video bar and touch controller
- Remotely using the admin portal of your video conferencing service provider - ideal for mass management
- Remotely using Jabra Plus Management

For local updates, log in as an admin on the video bar or touch controller, and go to **System** > **Management** > **Update**.

For remote updates, access the Web Console of the video bar and touch controller individually. Enter the IP address of the video bar or touch controller in a browser. If this is the first time accessing the Web Console, the default username is **admin** and the password is the **last 6 digits of the serial number of the device used to access**

the Web Console. The serial number of the Jabra device is available in **About** > **Device settings.**

Firmware updates in Jabra Plus Management will follow the Firmware policy assigned to the meeting room configuration.

Go to **Meeting rooms** > **Room configurations** and select **Firmware policy**.

11. Restart devices

The video bar and touch controller settings will remain the same when you restart them. The PanaCast SpeakerMic will automatically restart when restarting the PanaCast 55 VBS. You can restart the video bar and touch controller using one of the following options:

Web Console – enter the IP address of the video bar or touch controller in the browser and go to the **General > System reset** menu and select **Restart connected devices**.

Jabra Plus Management – log in using your Jabra Plus account. Go to the **Meeting room** > **Room inventory** menu, select your organization and corresponding meeting room. Go the action menu on the PanaCast 55 VBS video bar or touch controller, and select **Reboot device**.

Admin portal of your video conferencing service provider.

Touch Controller – Go to the **Device settings** menu in your video conferencing app. Go to the **General > System reset** menu and select **Restart connected devices**. The video bar and touch controller will be restarted.

Manual restart of the video bar

Press and hold the **Reset** button on the back of the video bar. Release the button after 5 seconds and a restarting message will be displayed on the monitor.

The video bar will restart and play an audio notification when ready for use. The reboot takes approximately 1 minute.

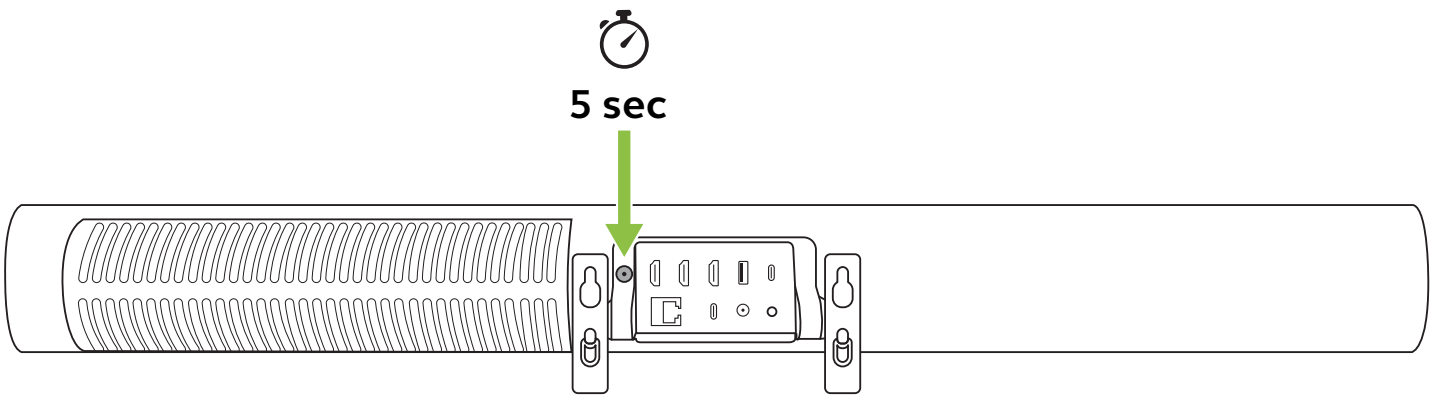

Manual restart of the touch controller

Use a paperclip to press and hold the **Pinhole reset** button on the edge of the screen of the touch controller. Release the button after 5 seconds and a restarting message will be displayed on the screen.

The reboot takes approximately 1 minute.

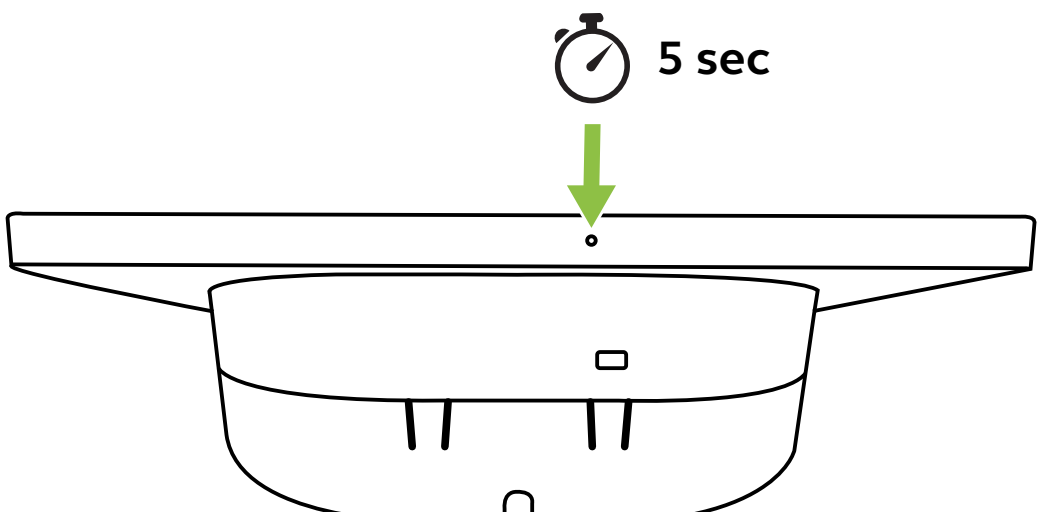

12. Factory reset

Factory reset will restore the touch controller and video bar to their factory default settings and it will be necessary to re-pair the devices.

You can factory reset the video bar and touch controller using one of the following options:

Web Console – enter the IP address of the video bar or touch controller in the browser and go to the **General > System reset** menu and select **Factory reset**.

Touch Controller – Go to the **Device settings** menu in your video conferencing app. Log in as admin and go to the **General > System reset** menu and select **Factory reset**. The video bar and touch controller will be reset.

Manual factory reset of video bar

Individual resetting will restore the video bar to its factory default settings and it will be necessary to re-pair the video bar to the touch controller.

Press and hold the **Reset** button on the back of the video bar for 20 seconds until the LED flashes pink and the factory reset message is displayed on the monitor.

The video bar will restart and play an audio notification when ready for use. The reboot takes approximately 1 minute.

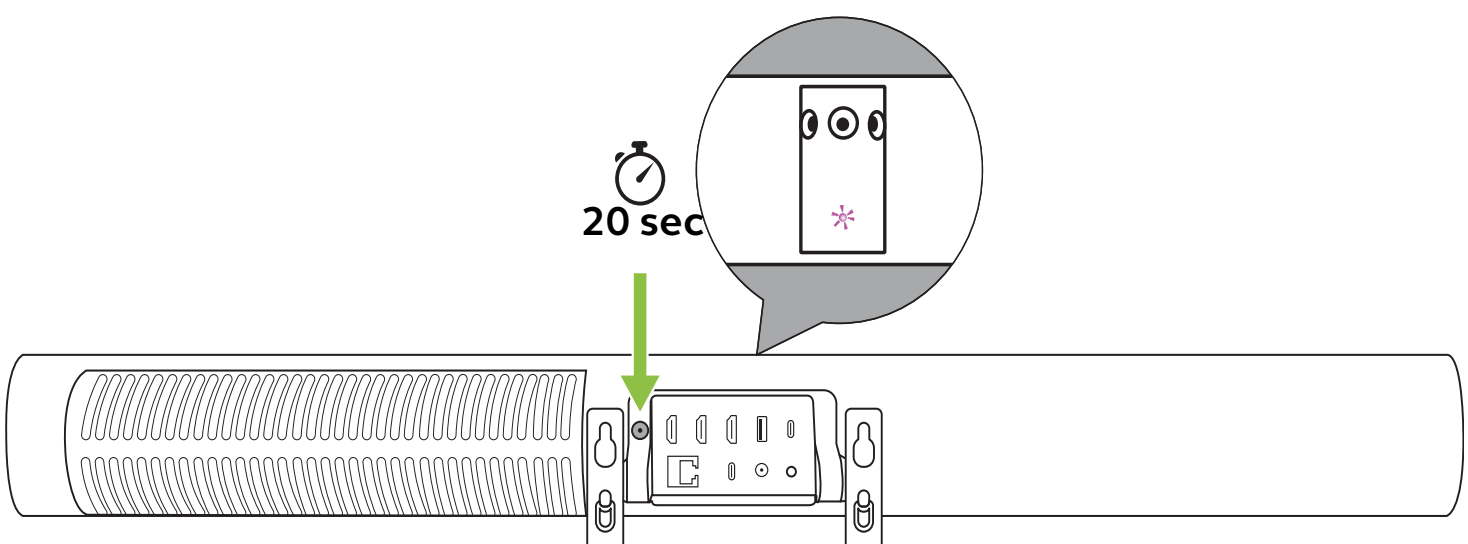

Manual factory reset of the touch controller

Manual factory reset will restore the touch controller to its factory default settings and it will be necessary to re-pair the touch controller to the video bar.

Use a paperclip to press and hold the Pinhole reset button on the back of the touch controller for 20 seconds until the factory data reset message is displayed on the screen.

The reboot takes approximately 1 minute.

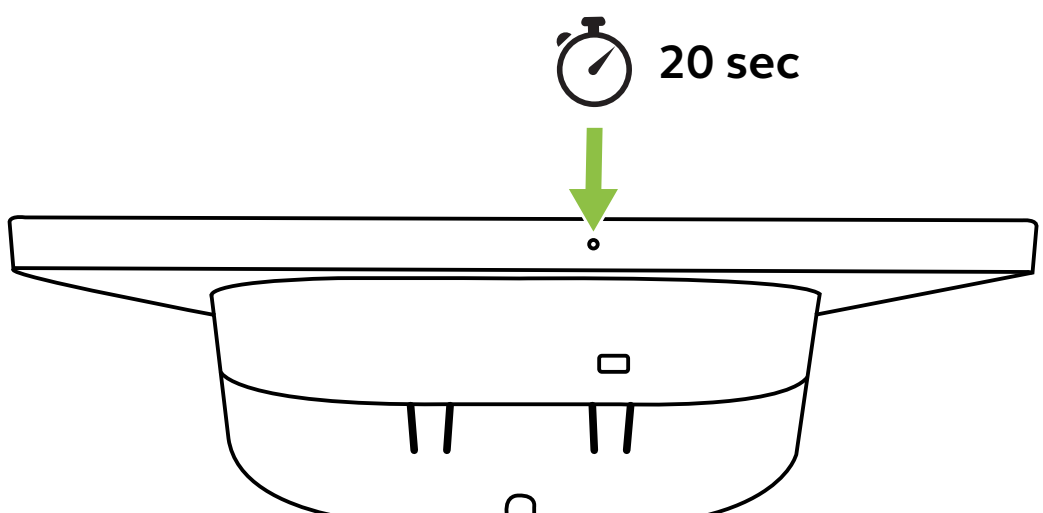

A security code can be configured to prevent users from manually factory resetting the Jabra devices. You can configure it using the Web Console or within the admin settings directly on the device.

Web Console - enter the IP address of the video bar or touch controller in the browser. Log in as an admin and go to **Account** > **Access**.

Touch controller - log in as an admin and go to **Account** > **Access**.

After manually starting the factory reset of the Jabra device, the security code must be entered to complete the factory reset.

13. Languages

The PanaCast 55 VBS is available in the following languages:

-Chinese	-Finnish	-Norwegian	-Turkish
-Czech	-French	-Polish	-Japanese
-Danish	-German	-Russian	-Korean
-Dutch	-Hungarian	-Spanish	
-English	-Italian	-Swedish	

During the Setup wizard, you can select the corresponding language.

You can also change the language by logging in as an admin and selecting **General** > **Region and language** > **Language**.

14. Support

14.1 FAQ and technical specifications

You can view the FAQ, certifications, and technical specifications on the *PanaCast 55 VBS support page*.

14.2 How to care for your Jabra device

The PanaCast 55 VBS is for indoor use only.

- Avoid direct sunlight and temperatures above 40°C/104°F or below 0°C/32°F.
- Do not expose the camera or cables to rain or other liquids.
- Do not position the devices near the vents of a monitor or TV as this may cause the devices to overheat and malfunction.
- Clean the surface with a cloth dampened with a mild soap solution.

Learn more about the ***PanaCast 55 VBS***