Jabra GN

INSTALLATION MANUAL

PANACAST 40 VBS

Technology for life's new rhythm

© 2025 GN Audio A/S. All rights reserved. Jabra® is a trademark of GN Audio A/S. The Bluetooth® word mark and logos are registered trademarks owned by the Bluetooth SIG, Inc. and any use of such marks by GN Audio A/S is under license.

Made in Thailand

MODEL: VSM050; VTD050

Declaration of Conformity can be found on www.jabra.com/doc

1. Welcome 5
2. Overview 6
2.1 Jabra PanaCast 40 VBS bar overview
2.2 Jabra Control IP overview
2.3 Included accessories - Jabra PanaCast 40 VBS bar
2.4 Optional accessories
2.5 Dimensions - Jabra PanaCast 40 VBS bar
2.6 Dimensions - Jabra Control IP
3. Quick system provisioning 14
4. Room setup guide 16
5. Mounting 17
5.1 Wall mount installation
5.2 Screen mount installation
5.3 Table stand installation
5.4 Installation height
5.5 Touch controller installation
6. Cabling 23
6.1 Room system cabling
6.2 Room system cabling - video bar only
6.3 Touch controller cabling
6.4 BYOD (Bring Your Own Device) mode
7. Configuring 29
7.1 Configuration using the video bar
7.2 Configuration using the touch controller
8. Pairing 32
9. Remote management 33
10. Software 34
10.1 Operating system
11. Video bar cover exchange 35
12. Restart devices 36

13. Factory reset 39

14. Languages 43

15. Support 44

15.1 FAQ and technical specifications

15.2 How to care for your Jabra device

1. Welcome

Thank you for using the Jabra PanaCast 40 VBS. We hope you will enjoy it!

Here are some key features you will benefit from by using the Jabra PanaCast 40 VBS:

- Maximize your small meeting rooms with 180° field of view in 4K video and impressive audio
- Cutting-edge AI-powered video features for more inclusive meetings
- Use with Jabra touch controller, any touchscreen or in permanent BYOD mode
- Works seamlessly with Microsoft Teams and Zoom
- Built on Microsoft Device Ecosystem Platform (MDEP) for enterprise-grade security
- Easy remote management and updates with Jabra Plus Management

2. Overview

2.1 Jabra PanaCast 40 VBS bar overview

FRONT SIDE

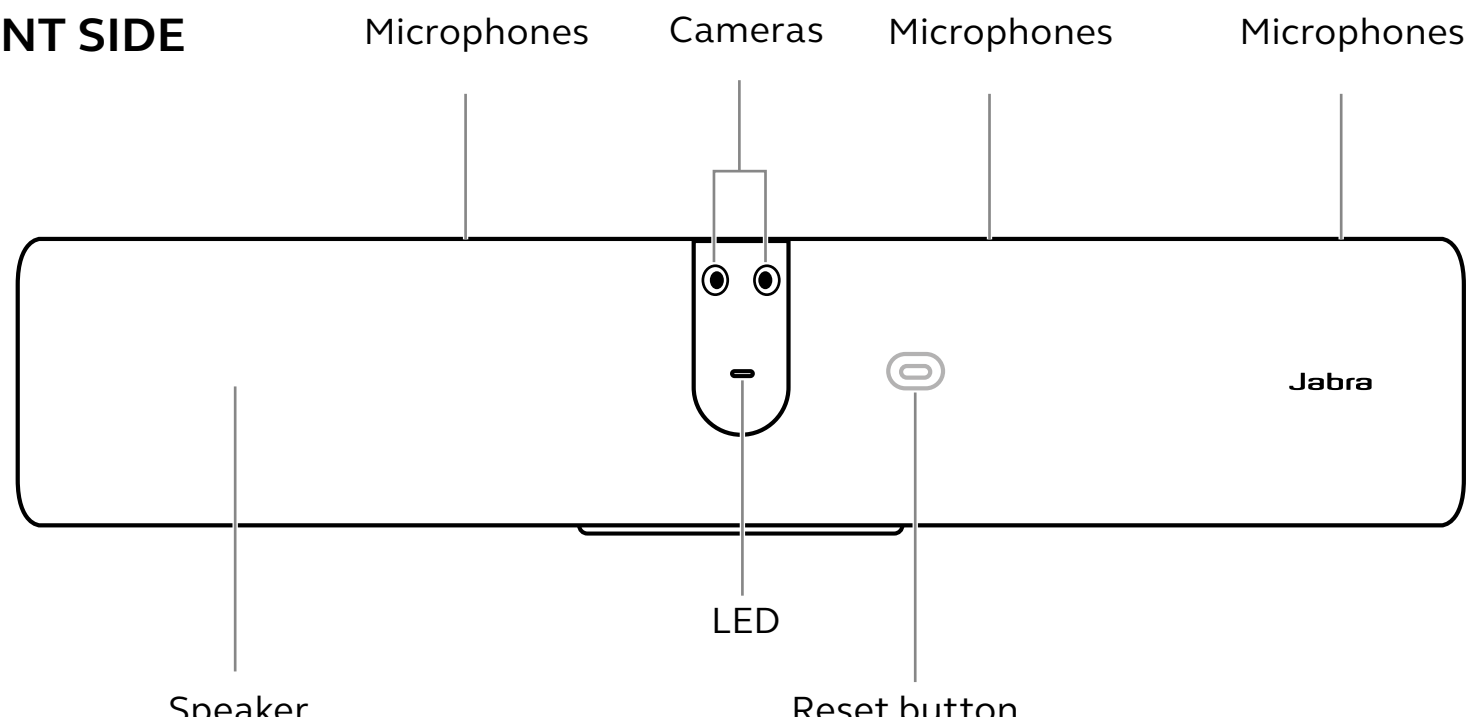

SECURITY NOTE: microphones and cameras can be used to record private conversations and footage.

BACK SIDE

PORT CONNECTIONS

- AUX OUT for assistive listening devices
- Ethernet network
- USB-A for touchscreen, USB mouse or GN approved USB peripherals
- HDMI for wired content sharing
- HDMI OUT for monitor
- USB-C for BYOD
- Power

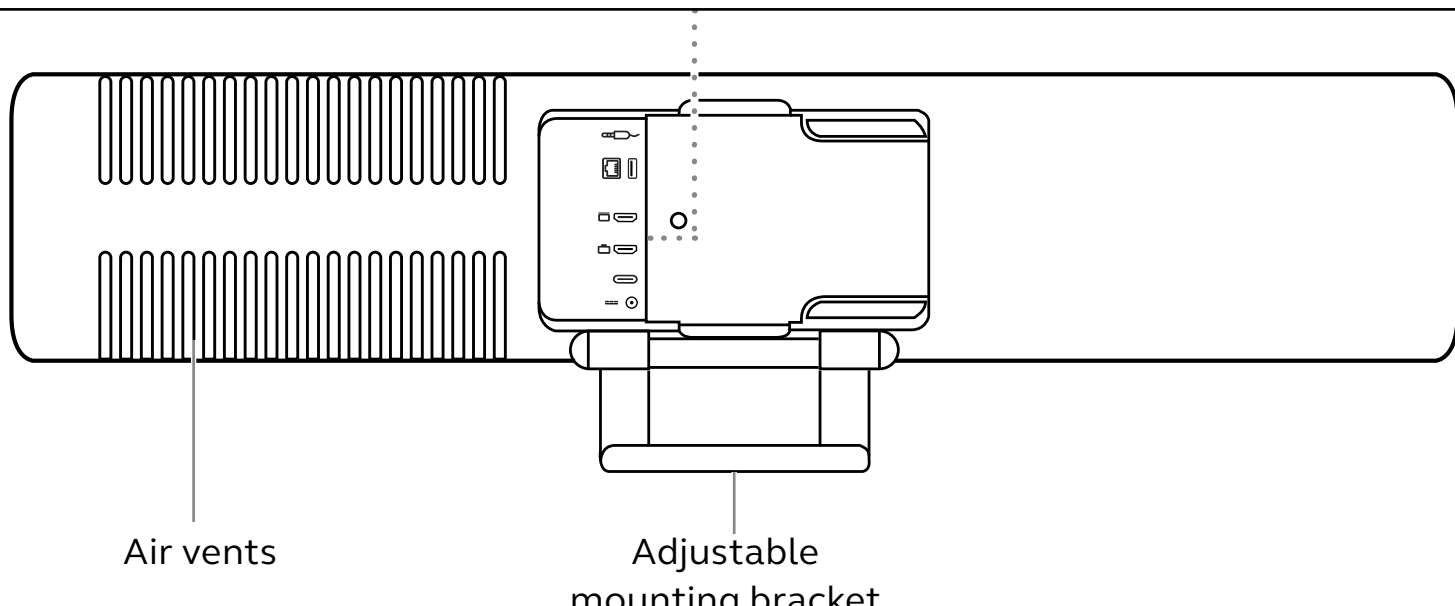

Security note: Bluetooth, Ethernet or Wi-Fi connections can potentially be used to transfer data to unauthorized devices.

2.2 Jabra Control IP overview

FRONT SIDE

10-inch LCD touchscreen

Proximity sensor

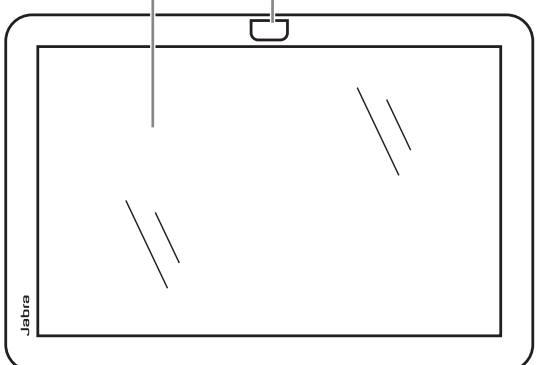

Proximity sensor

BACK SIDE

Pinhole reset button

Ultrasonic sound proximity emitter

Kensington security slot

Port connections *(remove cover for access)*

USB-C port *(for future use)*

Ethernet port *(PoE)*

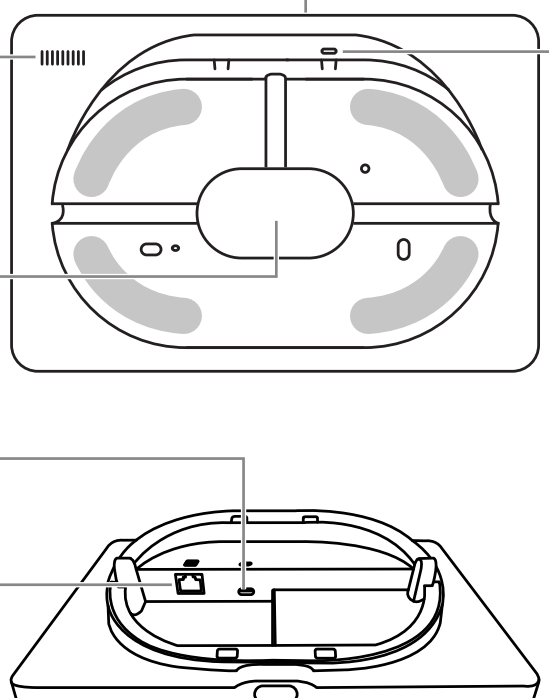

SECURITY NOTE: sensors can potentially be used to detect the presence of a user.

2.3 Included accessories - Jabra PanaCast 40 VBS bar

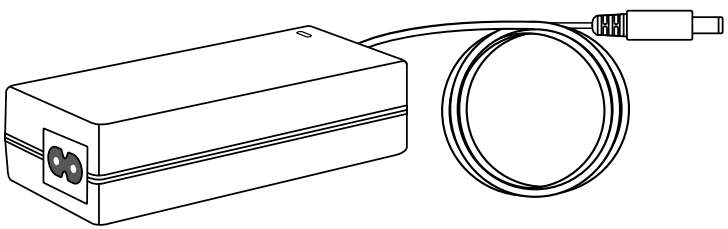

AC power adapter *(2m/6.56ft)*

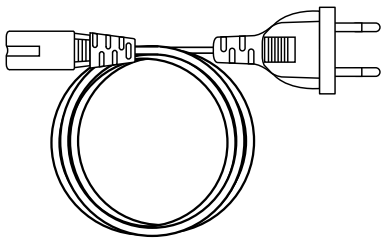

AC power cable
(1m/3.28ft)

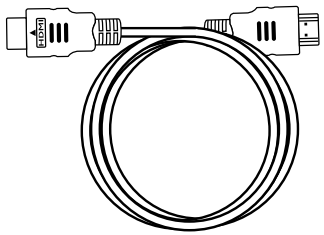

HDMI 2.0 Premium High Speed cable
(1.83m/6ft)

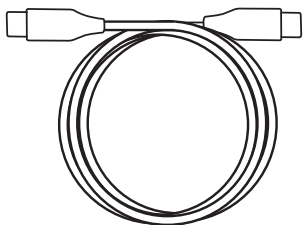

USB-C to C 2.0 cable
(3m/9.84ft)

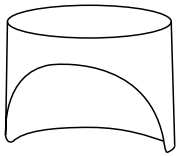

Camera privacy cover

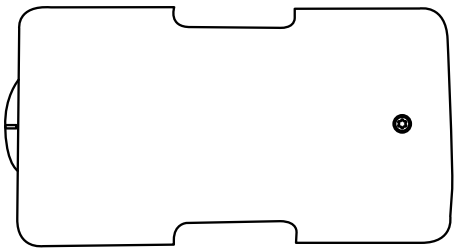

Cable compartment cover with embedded screw
(T10 torx)

2.4 Optional accessories

Accessories can be purchased at *jabra.com/accessories*

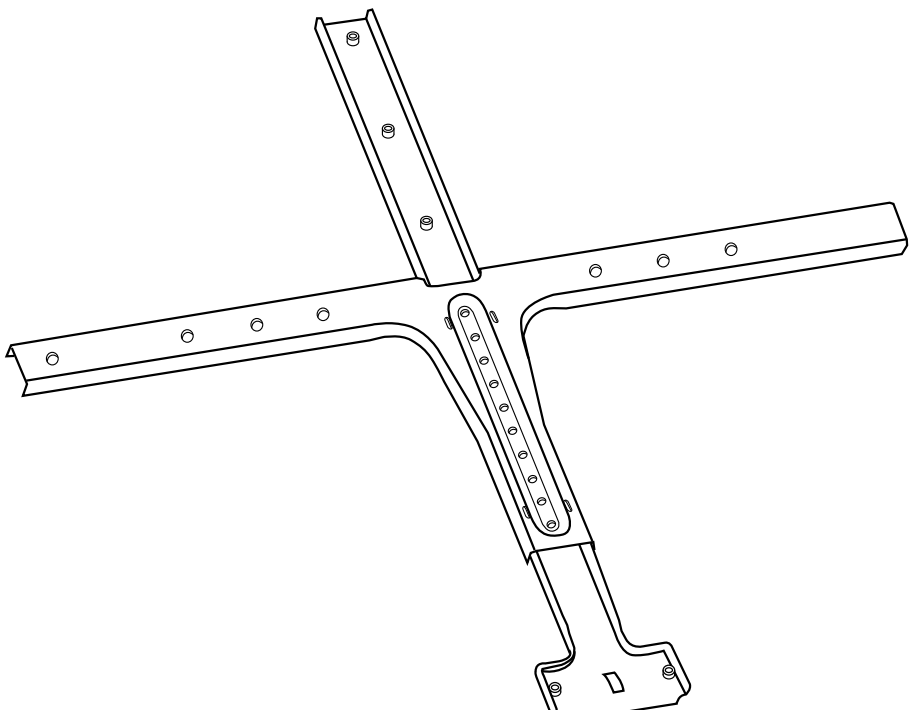

Screen mount

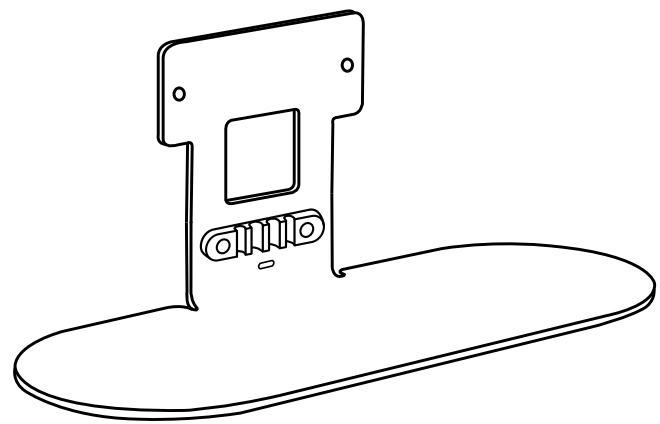

Table stand

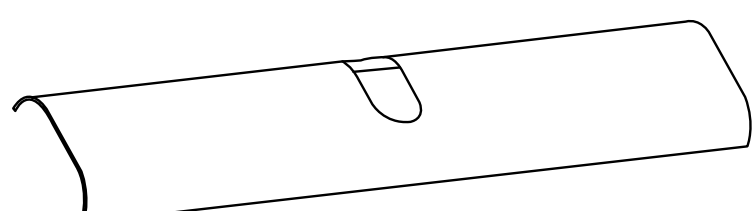

Easy-clean cover

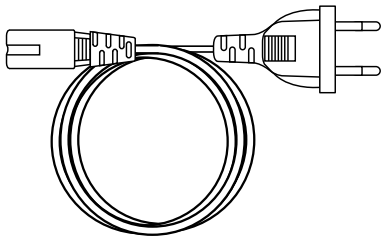

Regional power cords
(1m/3.28ft)

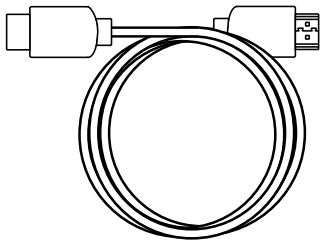

HDMI cable
(1.83m/6ft)

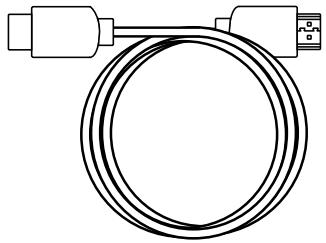

HDMI ingest cable
(4.57m/15ft)

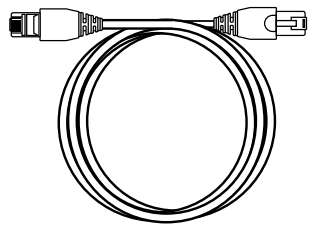

RJ45 Ethernet cable
(4.57m/15ft)

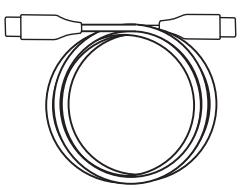

USB-C to C cable
(4.57m/15ft)

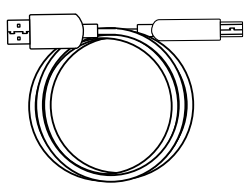

USB-A to B cable
(1.83m/6ft)

Camera tilt lock

POWER OVER ETHERNET (PoE) KIT

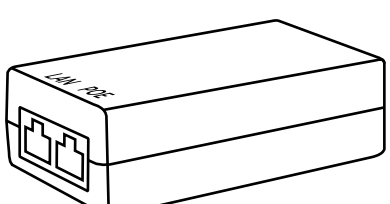

PoE injector

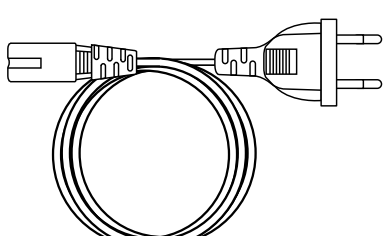

AC power cable
(1m/3.28ft)

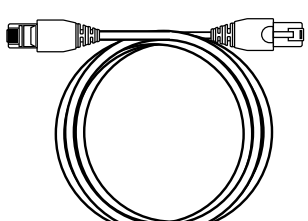

RJ45 Ethernet cable
(4.57m/15ft)

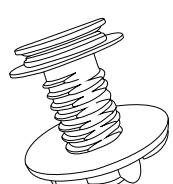

Jabra Control IP table mount

2.5 Dimensions - Jabra PanaCast 40 VBS bar

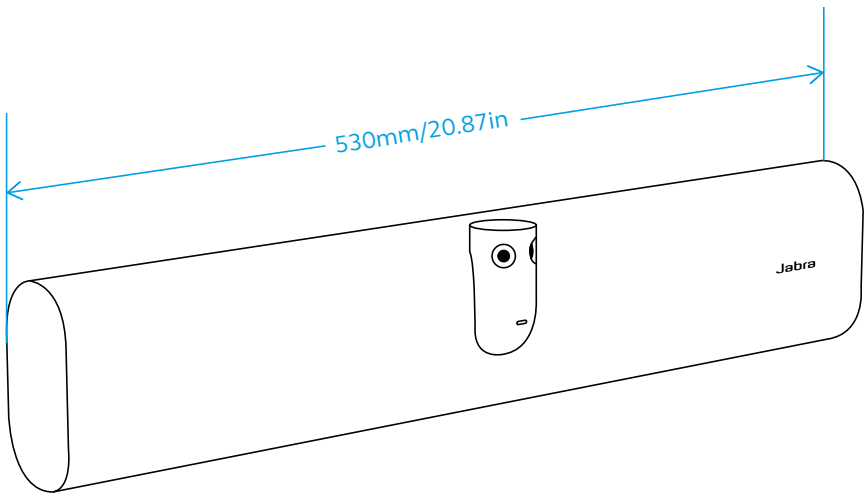

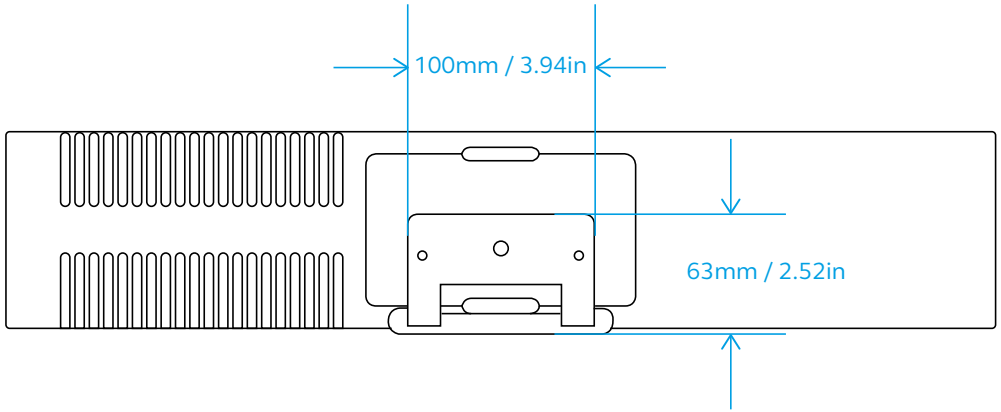

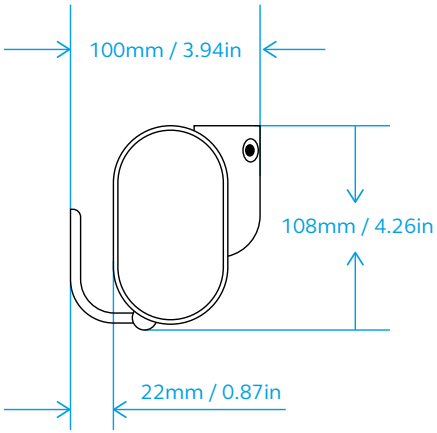

2.6 Dimensions - Jabra Control IP

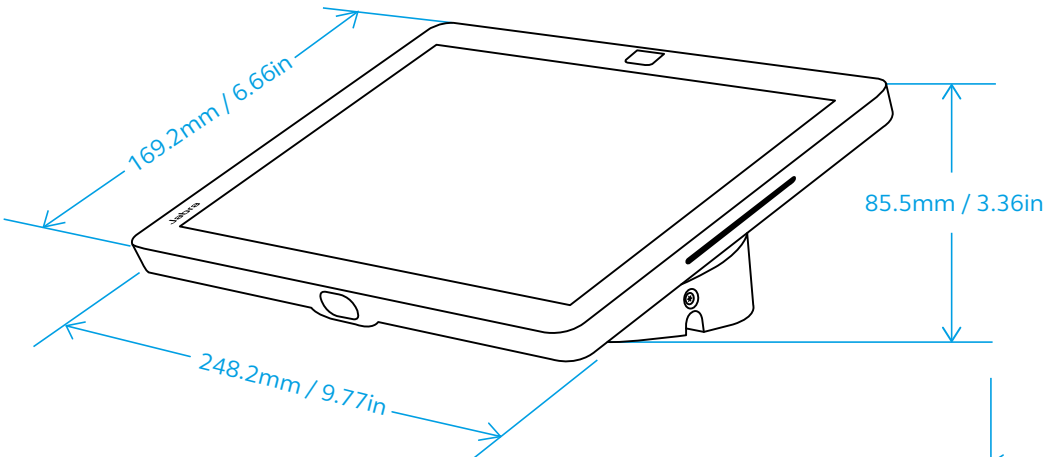

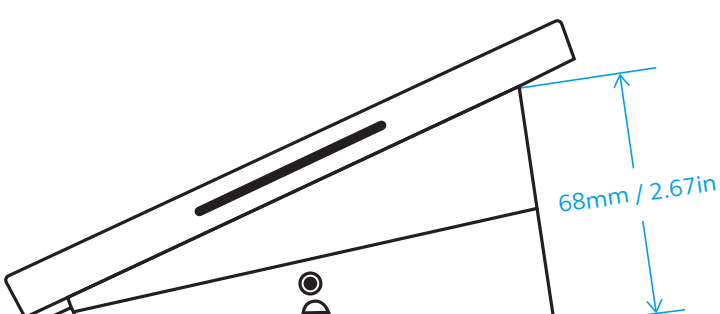

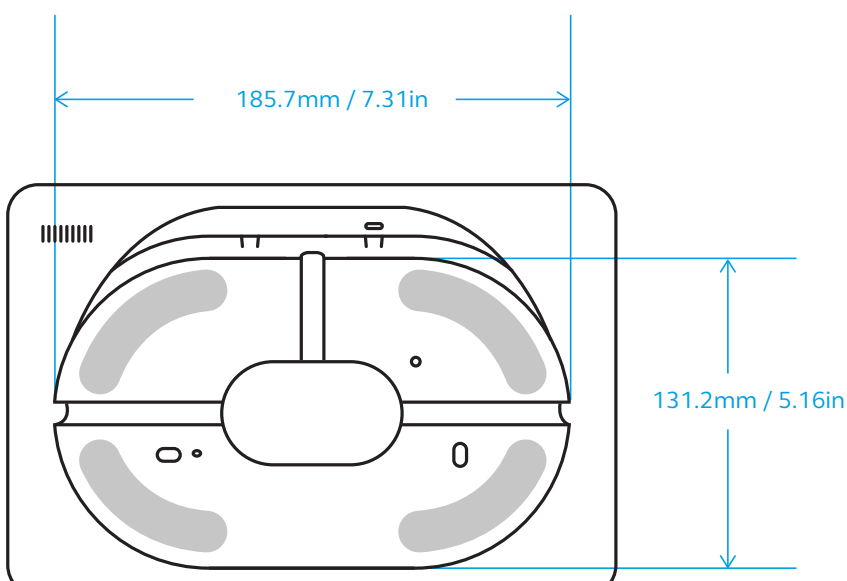

3. Quick system provisioning

The Jabra PanaCast 40 VBS box includes a provisioning window to easily connect the necessary cables to provision the system without having to remove the product from the box.

Provisioning using the Web Console

1. Connect the power, HDMI and Ethernet (not included) cables to the video bar and Power over Ethernet cable to the touch controller. Ensure both the video bar and the touch controller are connected to the same local area network (LAN).
2. Using a computer, access the Web Console by entering the IP address displayed on the monitor connected to the video bar.
3. Log in with username **admin**, and password **last 6 digits of the serial number displayed on the monitor**. After the first login, you must change the password.

4. Follow the Setup wizard on the computer.
5. Follow the remote provisioning instructions using Teams or Zoom.
6. Specify the provisioning code and installation details on the side of the box to facilitate the installation process.

Provisioning using the video bar

1. Connect the power, HDMI and Ethernet (not included) cables to the video bar and Power over Ethernet cable to the touch controller. Ensure both the video bar and the touch controller are connected to the same local area network (LAN).
2. Connect a USB mouse directly to the video bar and select **Continue on this device**.
3. Follow the Setup wizard on the monitor connected to the video bar.
4. Follow the remote provisioning instructions using Teams or Zoom.
5. Specify the provisioning code and installation details on the side of the box to facilitate the installation process.

4. Room setup guide

The Jabra PanaCast 40 VBS is designed for meeting rooms up to 4.5 meters x 4.5 meters (15 feet x 15 feet).

View the Room setup guide PDF here: *jabra.com/help/PanaCast40vbs/getstarted*

5. Mounting

5.1 Wall mount installation

View the wall mount assembly video and PDF here:
jabra.com/help/PanaCast40vbs/getstarted

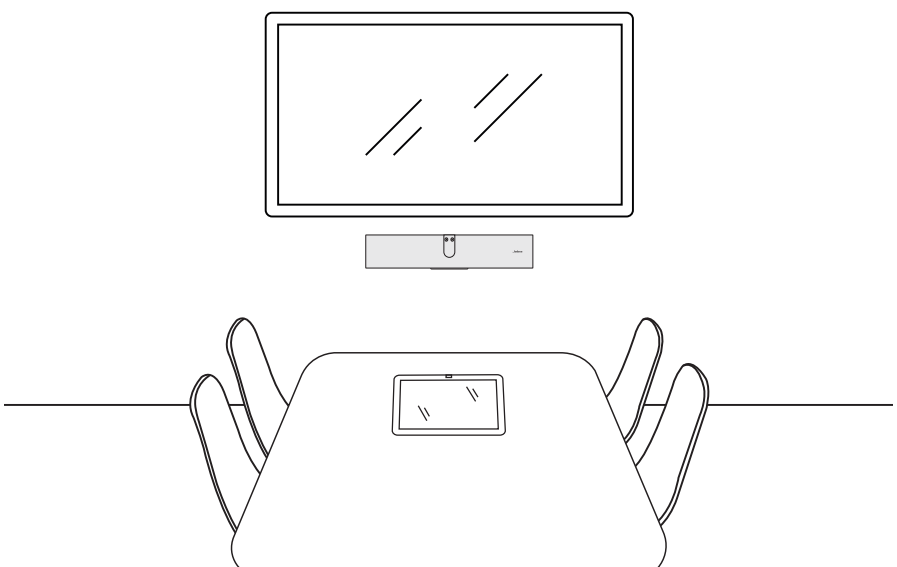

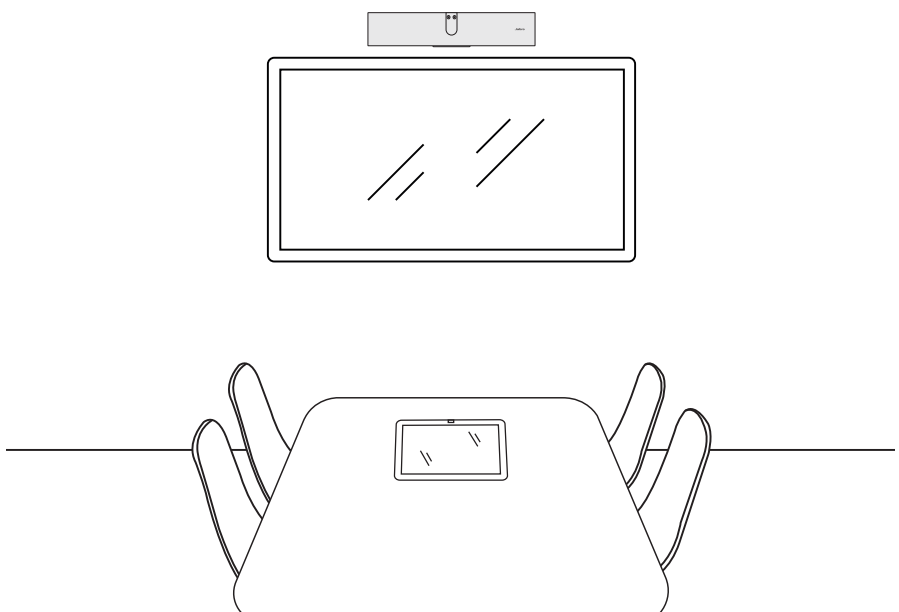

5.2 Screen mount installation

The screen mount is designed for screens up to 220 centimeters (86 inches) and VESA mounts up to 600 millimeters.

View the screen mount assembly video and PDF here:
jabra.com/help/PanaCast40vbs/getstarted

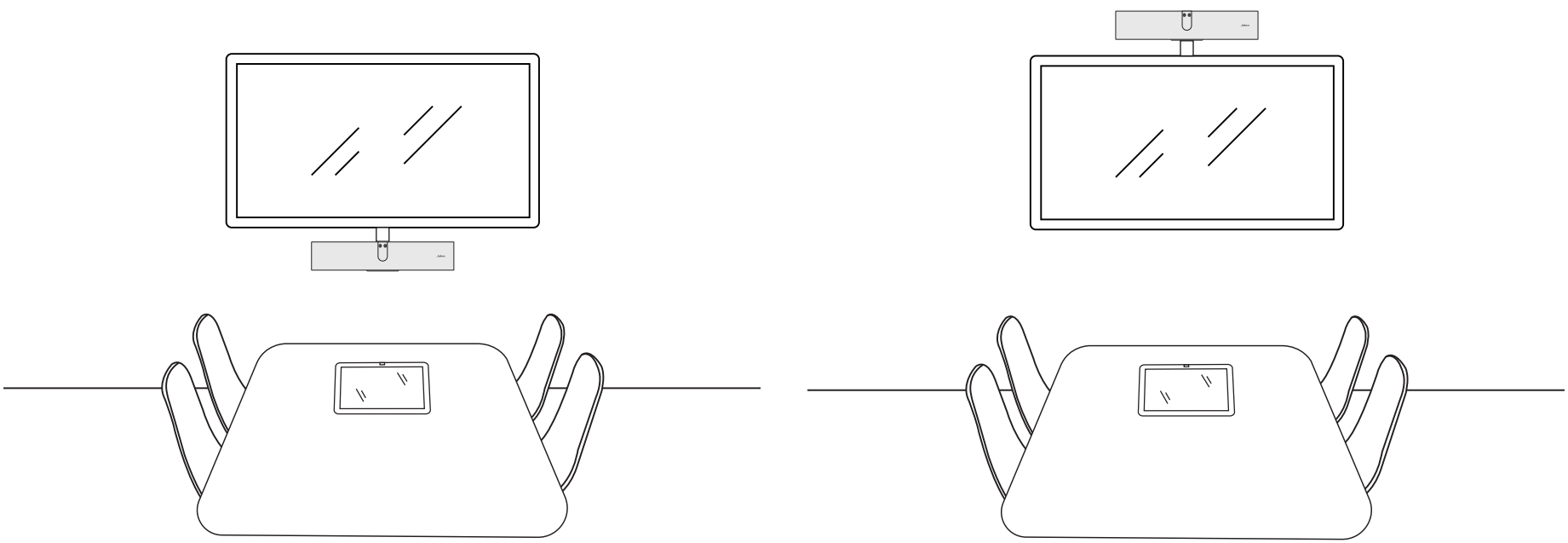

5.3 Table stand installation

View the table stand assembly video and PDF here:
jabra.com/help/PanaCast40vbs/getstarted

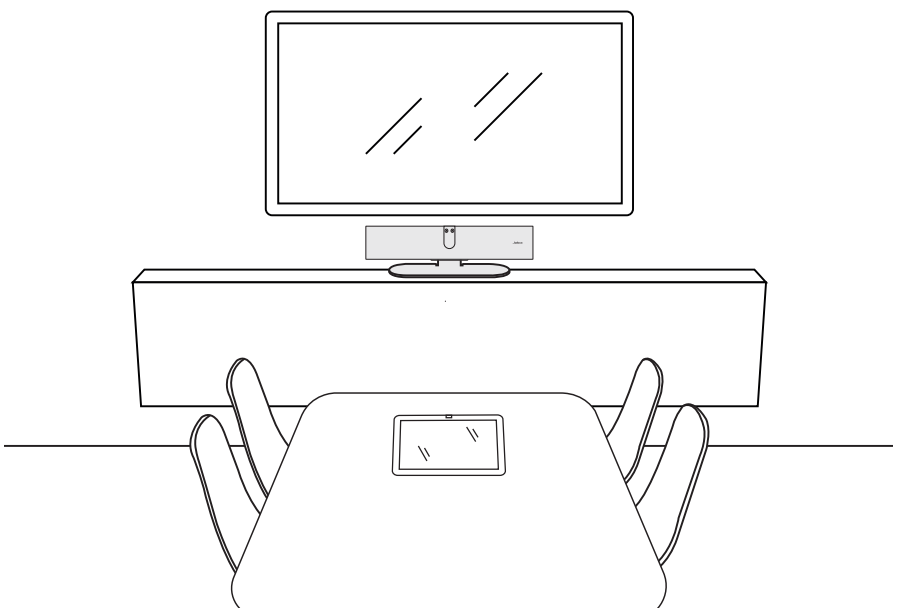

5.4 Installation height

When installing the video bar with the wall mount or screen mount, the camera should be positioned 5 centimeters (2 inches) below the screen and ideally 30-35 centimeters (12-14 inches) above the table top or 100 centimeters (3 feet) minimum from the floor. The ideal mounting height is at eye level. If this height is not possible, it is recommended to install the video bar above the screen.

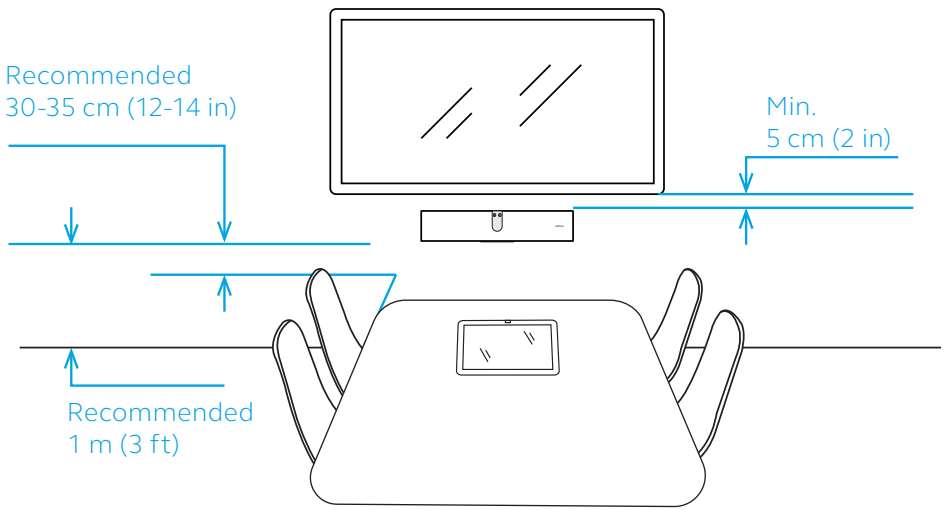

Do not mount the camera facing direct sunlight as this may affect the preset white balance and compromise the image.

5.5 Touch controller installation

Connect and route the Ethernet cable (PoE) before installing the touch controller.

On the table

Place the touch controller towards the meeting room entrance. This ensures the touch controller will automatically wake up when the proximity sensor detects movement.

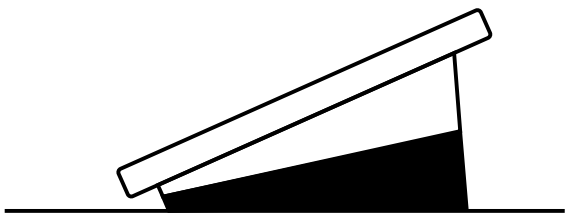

On the wall - flat

Mount the touch controller on a flat surface by using double sided mounting tape or using screws. If the touch controller is installed on a corner, keep a minimum of 10cm (4 inches) free to be able to tighten the screws on the side of the touch controller.

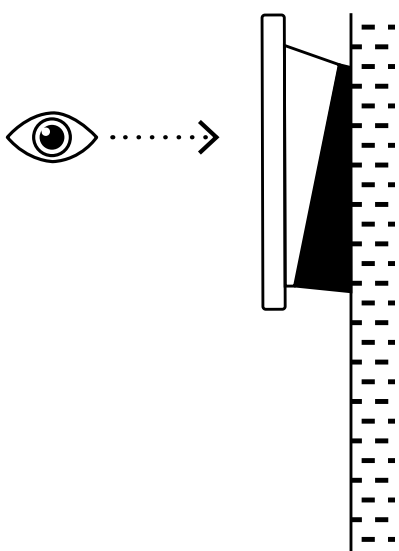

On the wall - angled

Remove the touch controller cover by pressing the release latches. Turn the cover 180°, align the latches correctly and press the cover until you hear a click.

Mount the touch controller in an angled position by using double sided mounting tape or screws.

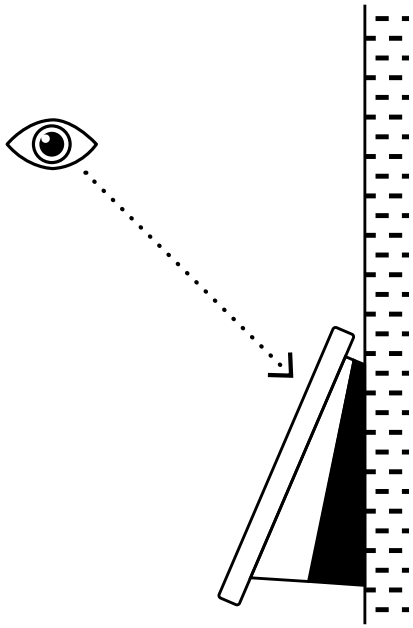

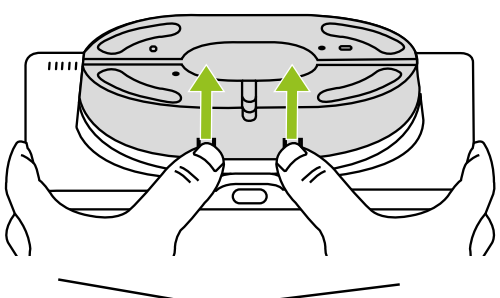

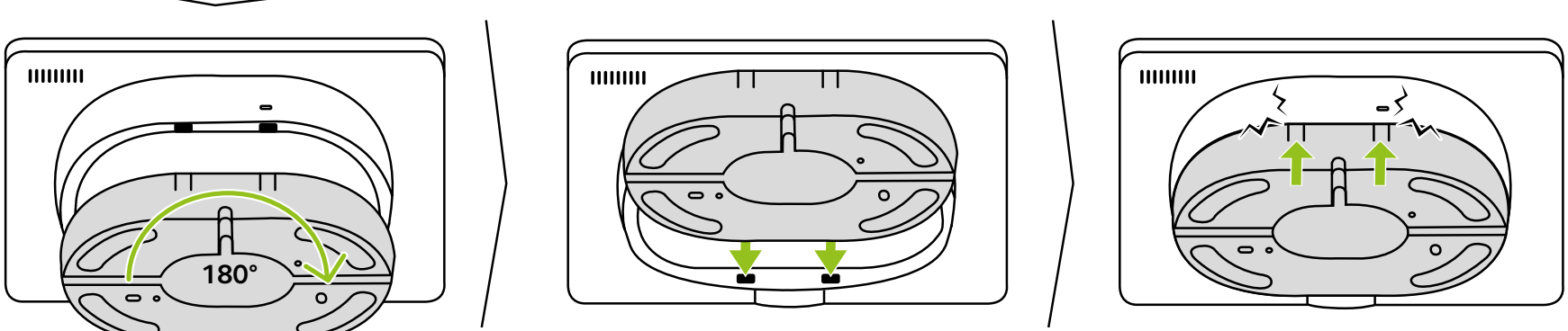

6. Cabling

6.1 Room system cabling

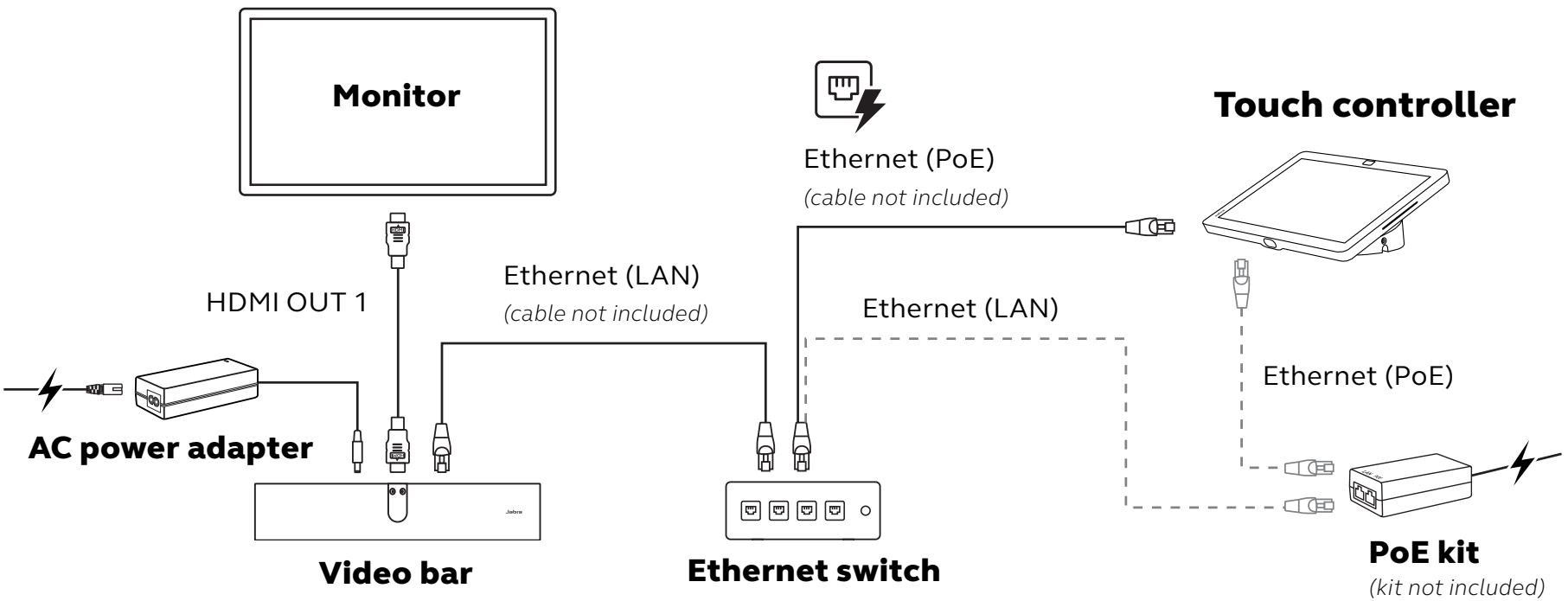

Important! When connecting and routing the cables inside the video bar, be careful of any sharp edges that may cause harm.

6.2 Room system cabling - video bar only

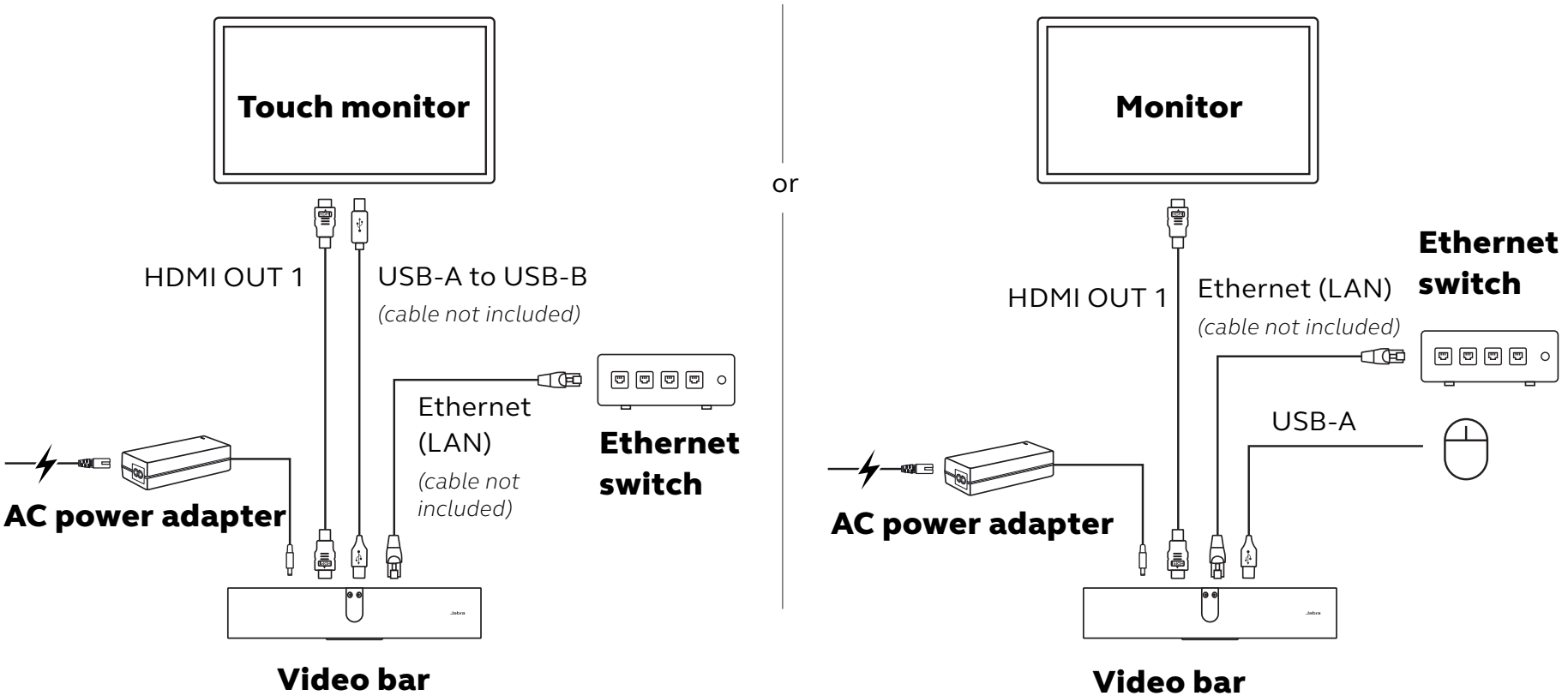

Important! When connecting and routing the cables inside the video bar, be careful of any sharp edges that may cause harm.

6.3 Touch controller cabling

POWERED ETHERNET

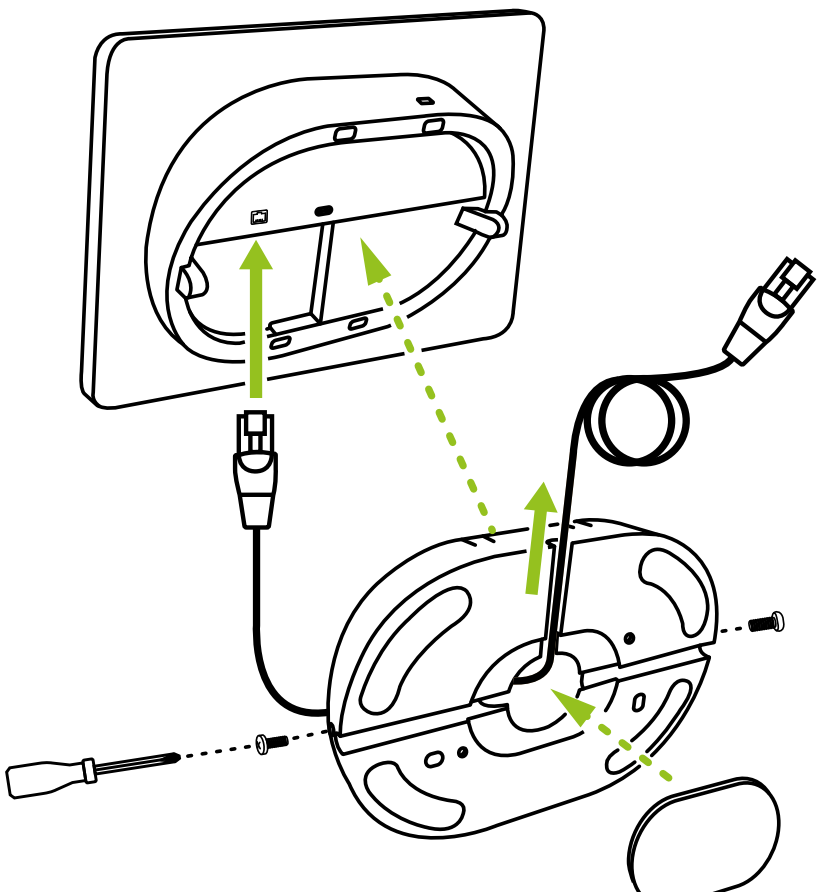

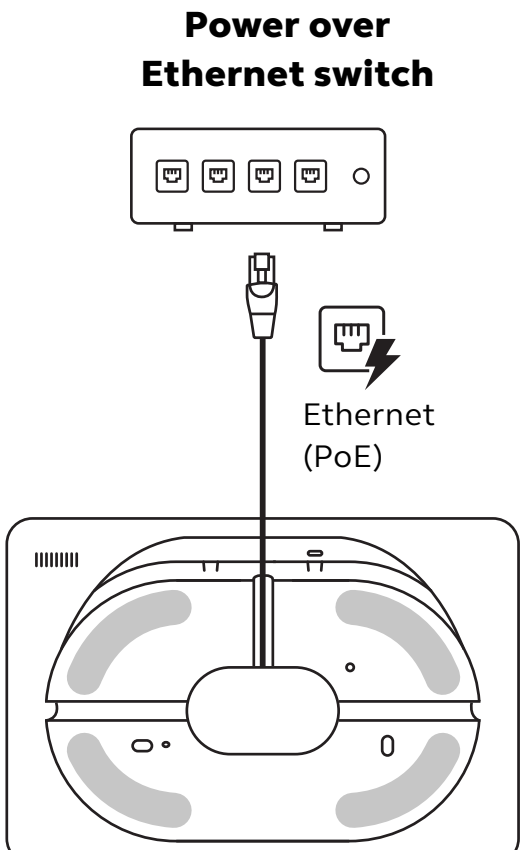

POWER OVER ETHERNET KIT - not included

If the Ethernet connection does not supply power to the touch controller, a PoE injector will need to be connected between the Ethernet switch and the touch controller.

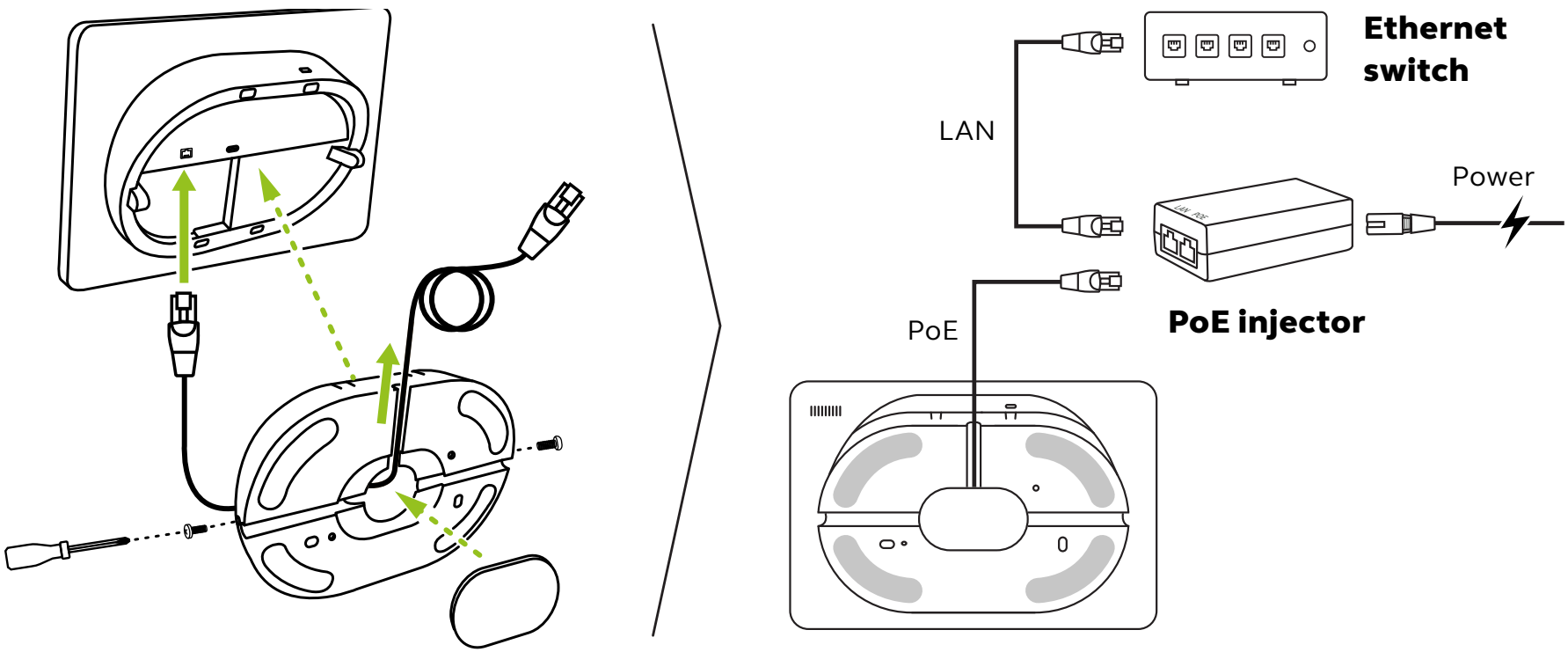

6.4 BYOD (Bring Your Own Device) mode

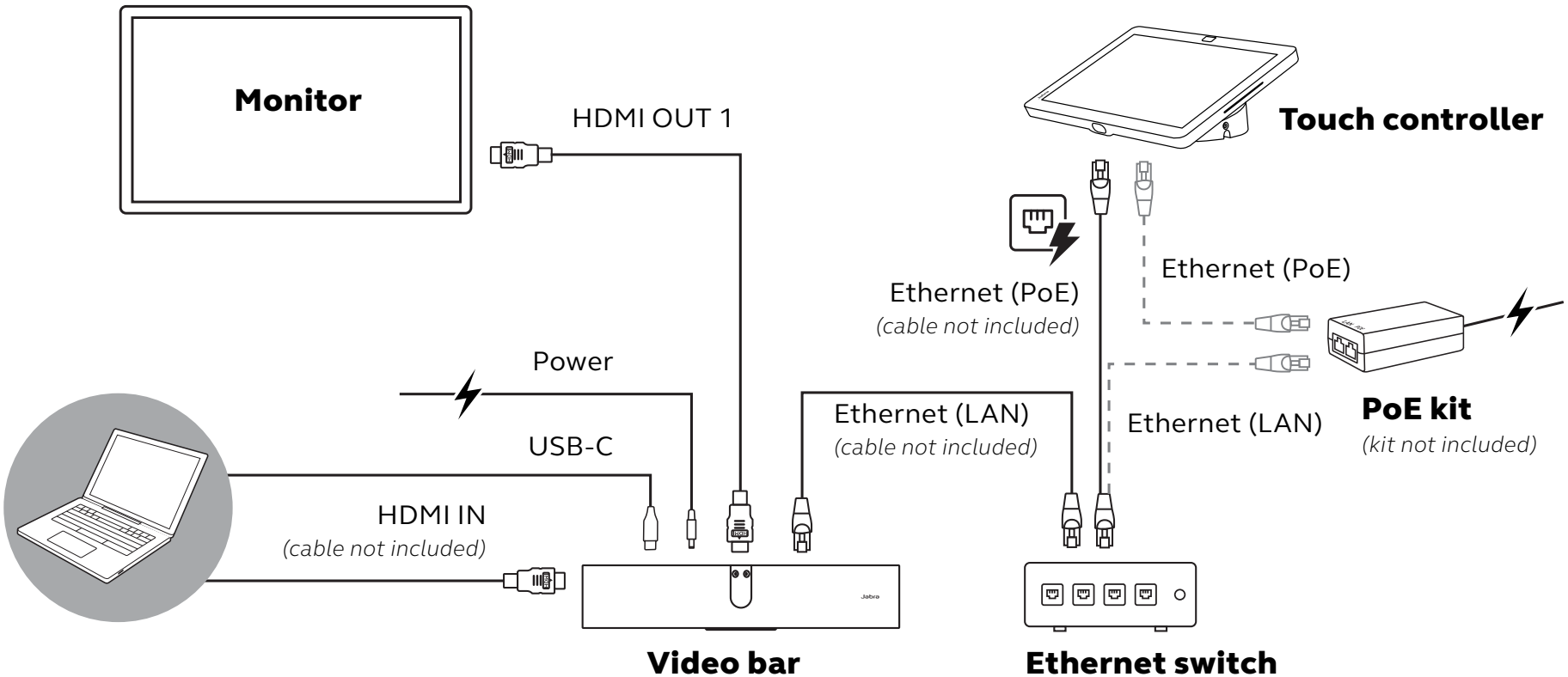

Important! When connecting and routing the cables inside the video bar, be careful of any sharp edges that may cause harm.

To enable BYOD mode using the touch controller, log in with the admin username and password. If this is the first time accessing the Web Console, the default user name is admin and the password is the last 6 digits of the serial number of the touch controller. The serial number of the touch controller is available in the **Device settings** section of the **About** menu. Go to the **System** menu, select **Bring Your Own Device** and turn on **Enable BYOD**. This allows meeting participants to start and exit BYOD mode from the touch controller when required.

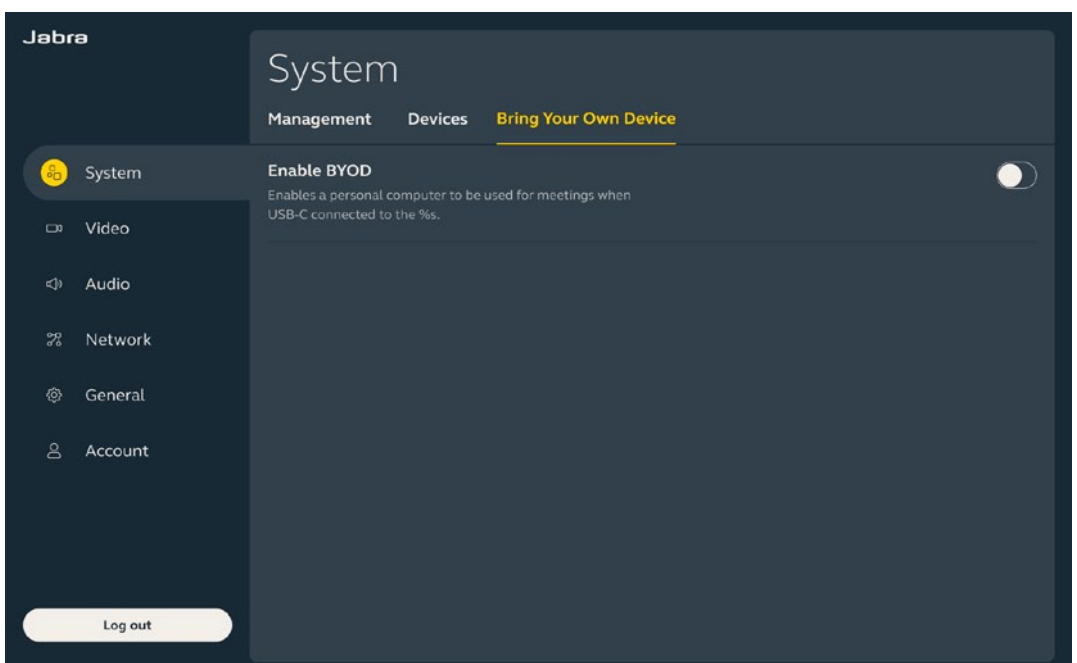

7. Configuring

Before starting the configuration of the Jabra PanaCast 40 VBS ensure both the video bar and the touch controller are powered on and connected to the same local area network (LAN) or Wi-Fi.

To link the Jabra PanaCast 40 VBS with an organization in Jabra Plus Management, enter the provisioning code and name the meeting room to identify the Jabra device in Jabra Plus Management. The provisioning code is generated in Jabra Plus Management. For more information, go to *jabra.com/help/jabraplus*

After the last step of the configuration it is necessary to log in to the video conferencing account of your service provider.

The Jabra PanaCast 40 VBS is versatile and can come pre-loaded with native Microsoft Teams Rooms on Android™ or Zoom Rooms for Android™*, or without a video conference service provider selected.

* Android™ is a trademark of Google LLC.

7.1 Configuration using the video bar

The Jabra PanaCast 40 VBS can be configured using just the video bar. This configuration method allows you to set up the system when there is no touch controller available. This configuration method requires either a touch monitor or a USB mouse.

The setup includes:
- Language selection
- Ethernet or Wi-Fi network configuration
- Date and time setup
- Firmware update
- Link with an organization in Jabra Plus Management
- Video Service Provider or BYOD selection, if not preselected

7.2 Configuration using the touch controller

The Jabra PanaCast 40 VBS is easily configured by following the Setup wizard using the touch controller.

The setup includes:
- Language selection
- Ethernet or Wi-Fi network configuration
- Date and time setup
- Pairing between video bar and touch controller, if not already paired
- Firmware update
- Link with an organization in Jabra Plus Management
- Video Service Provider or BYOD selection, if not preselected

8. Pairing

The Jabra PanaCast 40 VBS video bar and touch controller are pre-paired and ready to be configured.

If the video bar and touch controller are bought separately or the pairing has been lost, it is necessary to manually pair them.

1. Ensure both the video bar and touch controller are powered on and connected to the same local area network (LAN) or Wi-Fi.
2. Follow the Setup wizard using the touch controller.
3. Select the corresponding video bar from the available devices displayed based on the serial number and pair the devices. The serial number is available on the back of the video bar in the cable compartment.

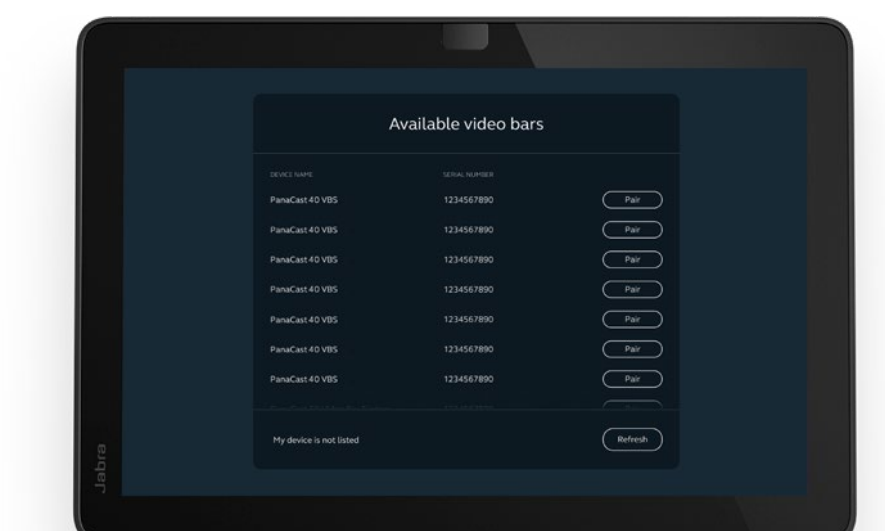

9. Remote management

The Jabra PanaCast 40 VBS can be remotely managed over an Ethernet or Wi-Fi connection. The Web Console can be accessed through a computer by entering the IP address of the video bar or touch controller into a browser. The computer and video bar or touch controller must be connected to the same network.

If this is the first time you are accessing the Web Console, it is recommended to change the username and password. The default username is **admin** and the password is the **last 6 digits of the serial number of the Jabra device used to access the Web Console**. The serial number of the Jabra device is available in the **Device settings** section of the **About** menu and printed on the box. After the first login, you must change the password.

If the Jabra PanaCast 40 VBS has not been configured, the Web Console will take you through the necessary configuration process.

To manage the Jabra PanaCast 40 VBS using Jabra Plus Management, log in with your Jabra Plus Management account. Go to **Meeting rooms** > **Room inventory**, select the corresponding meeting room and Jabra PanaCast 40 VBS.

For more information about Jabra Plus Management, go to *jabra.com/help/jabraplus*

10. Software

10.1 Operating system

Jabra PanaCast 40 VBS operates on Android™ *.

* Android is a trademark of Google LLC.

11. Video bar cover exchange

The video bar cover is magnetically attached allowing easy cleaning and exchange. The video bar covers available can be found in *jabra.com/accessories*.

Lift the corners of the cover away from the video bar to remove it. Align the latches on top of the video bar and place the new cover which will magnetically attach.

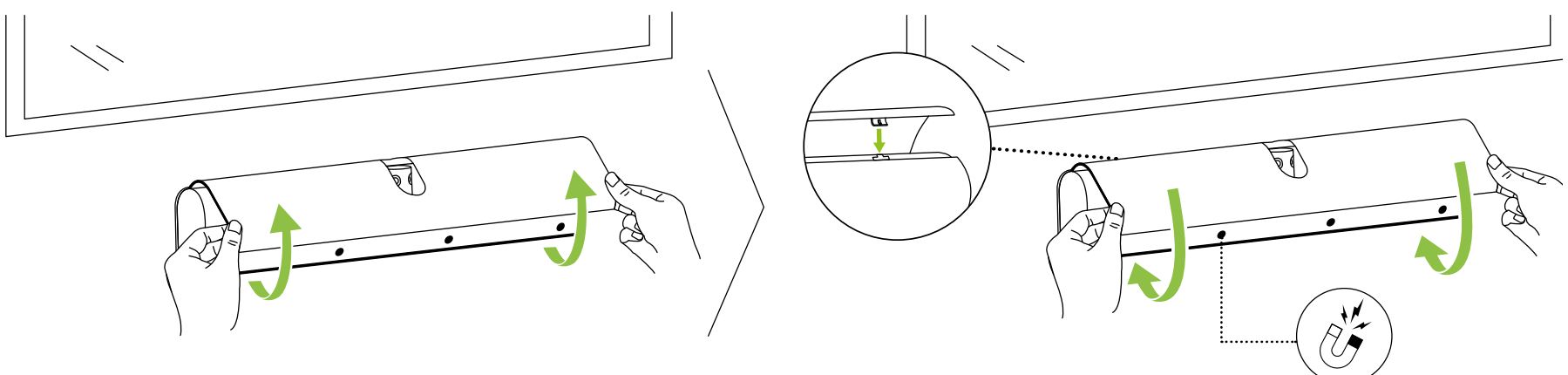

12. Restart devices

The video bar and touch controller settings will remain the same when you restart them. You can restart the video bar and touch controller using one of the following options:

Web Console – enter the IP address of the video bar or touch controller in the browser and go to the **General > System reset** menu and select **Restart connected devices**.

Jabra Plus Management – log in using your Jabra Plus Management account. Go to the **Meeting room** > **Room inventory** menu, select your organization and corresponding meeting room. Go the action menu on the Jabra PanaCast 40 VBS video bar or touch controller, and select **Reboot device**.

Admin portal of your video conferencing service provider.

Touch Controller – Go to the **Device settings** menu in your video conferencing app. Go to the **General > System reset** menu and select **Restart connected devices**. The video bar and touch controller will be restarted.

Manual restart of the video bar

Lift the cover of the video bar. Press and hold the button. Release the button after 5 seconds and a restarting message will be displayed on the monitor.

The video bar will restart and play an audio notification when ready for use. The reboot takes approximately 1 minute.

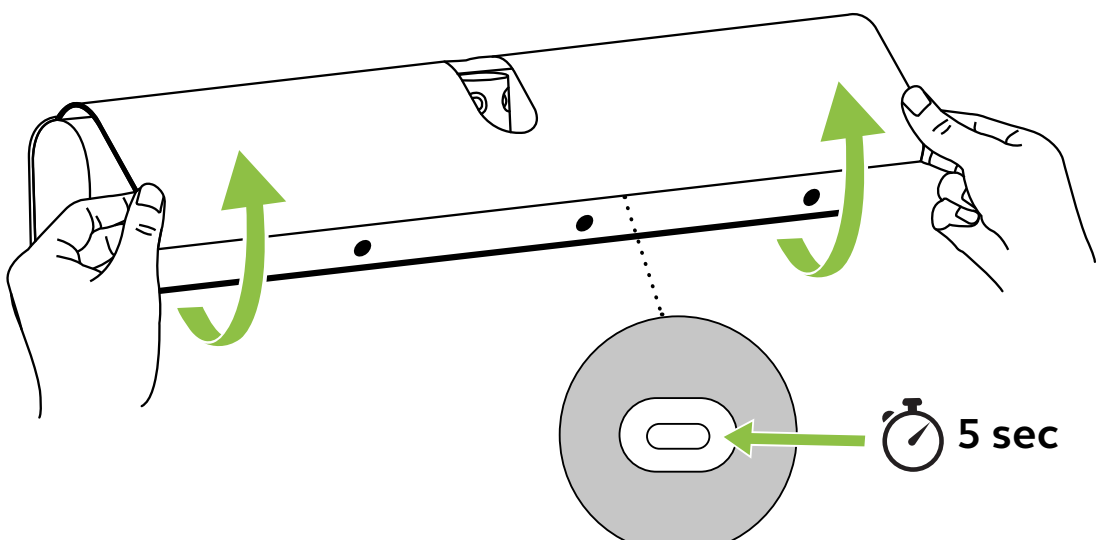

Manual restart of the touch controller

Use a paperclip to press and hold the **Pinhole reset** button on the edge of the screen of the touch controller. Release the button after 5 seconds and a restarting message will be displayed on the screen.

The reboot takes approximately 1 minute.

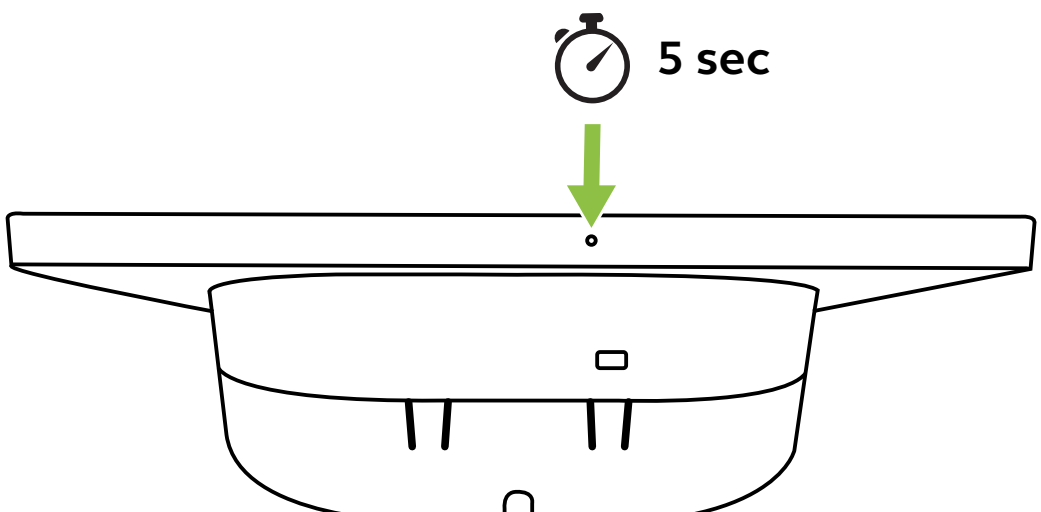

13. Factory reset

Factory reset will restore the touch controller and video bar to their factory default settings and it will be necessary to re-pair the devices.

You can factory reset the video bar and touch controller using one of the following options:

Web Console – enter the IP address of the video bar or touch controller in the browser and go to the **General > System reset** menu and select **Factory reset**.

Touch Controller – Go to the **Device settings** menu in your video conferencing app. Log in as admin and go to the **General > System reset** menu and select **Factory reset**. The video bar and touch controller will be reset.

Manual factory reset of the video bar

Manual factory reset will restore the video bar to its factory default settings and it will be necessary to re-pair the video bar to the touch controller.

Lift the cover of the video bar. Press and hold the button for 20 seconds until the LED flashes pink and the factory data reset message is displayed on the monitor.

The video bar will restart and play an audio notification when ready for use. The reboot takes approximately 1 minute.

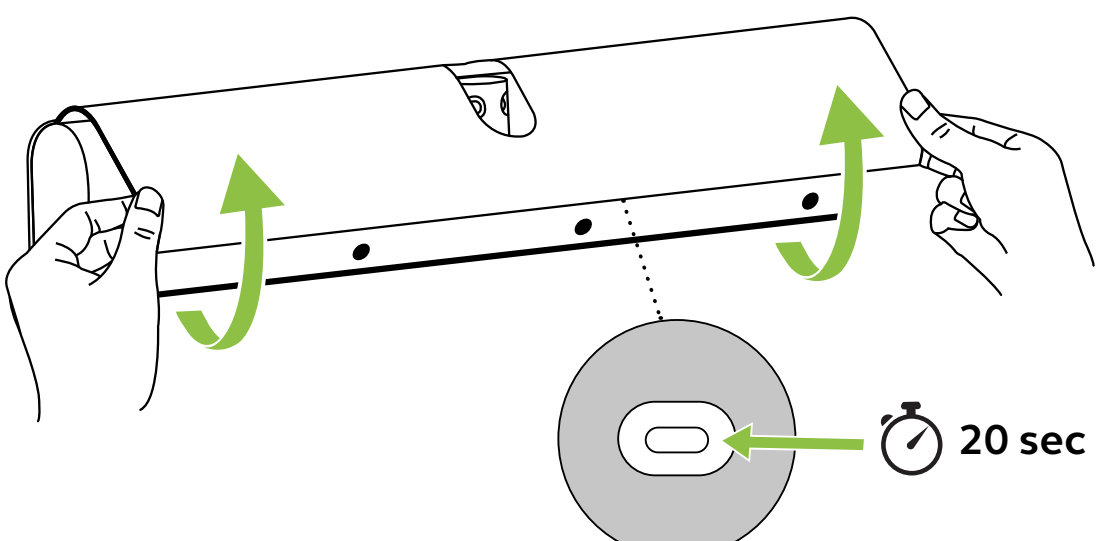

Manual factory reset of the touch controller

Manual factory reset will restore the touch controller to its factory default settings and it will be necessary to re-pair the touch controller to the video bar.

Use a paperclip to press and hold the Pinhole reset button on the back of the touch controller for 20 seconds until the factory data reset message is displayed on the screen.

The reboot takes approximately 1 minute.

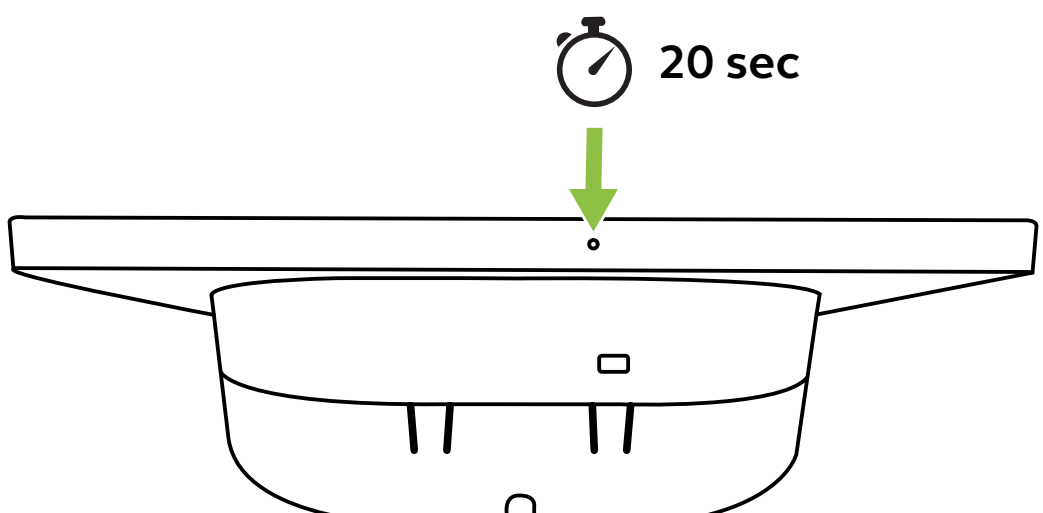

A security code can be configured to prevent users from manually factory resetting the Jabra devices. You can configure it using the Web Console or within the admin settings directly on the device.

Web Console - enter the IP address of the video bar or touch controller in the browser. Log in as an admin and go to **Account** > **Access**.

Touch controller - log in as an admin and go to **Account** > **Access**.

After manually starting the factory reset of the Jabra device, the security code must be entered to complete the factory reset.

14. Languages

The PanaCast 40 VBS is available in the following languages:

-Chinese
-Czech
-Danish
-Dutch
-English
-Finnish
-French
-German
-Hungarian
-Italian
-Norwegian
-Polish
-Russian
-Spanish
-Swedish
-Turkish
-Japanese
-Korean

15. Support

15.1 FAQ and technical specifications

View the FAQ, certifications, and technical specifications at *jabra.com/help/PanaCast40vbs*

15.2 How to care for your Jabra device

The Jabra PanaCast 40 VBS is for indoor use only.

- Avoid direct sunlight and temperatures above 40°C/104°F or below 0°C/32°F.
- Do not expose the camera or cables to rain or other liquids.
- Do not position the devices near the vents of a monitor or TV as this may cause the devices to overheat and malfunction.
- Clean the surface with a cloth dampened with a mild soap solution.

To learn more about the Jabra PanaCast 40 VBS,
go to ***jabra.com/help/PanaCast40vbs/getstarted***