Measuring carbon footprint through Life Cycle Assessments (LCAs)

Sustainability starts with transparency. That's why we carry out LCAs on our products, to understand their impact on the environment. So you can see the carbon footprint of your product at a glance, and we can work to make future products more sustainable. Everybody wins.

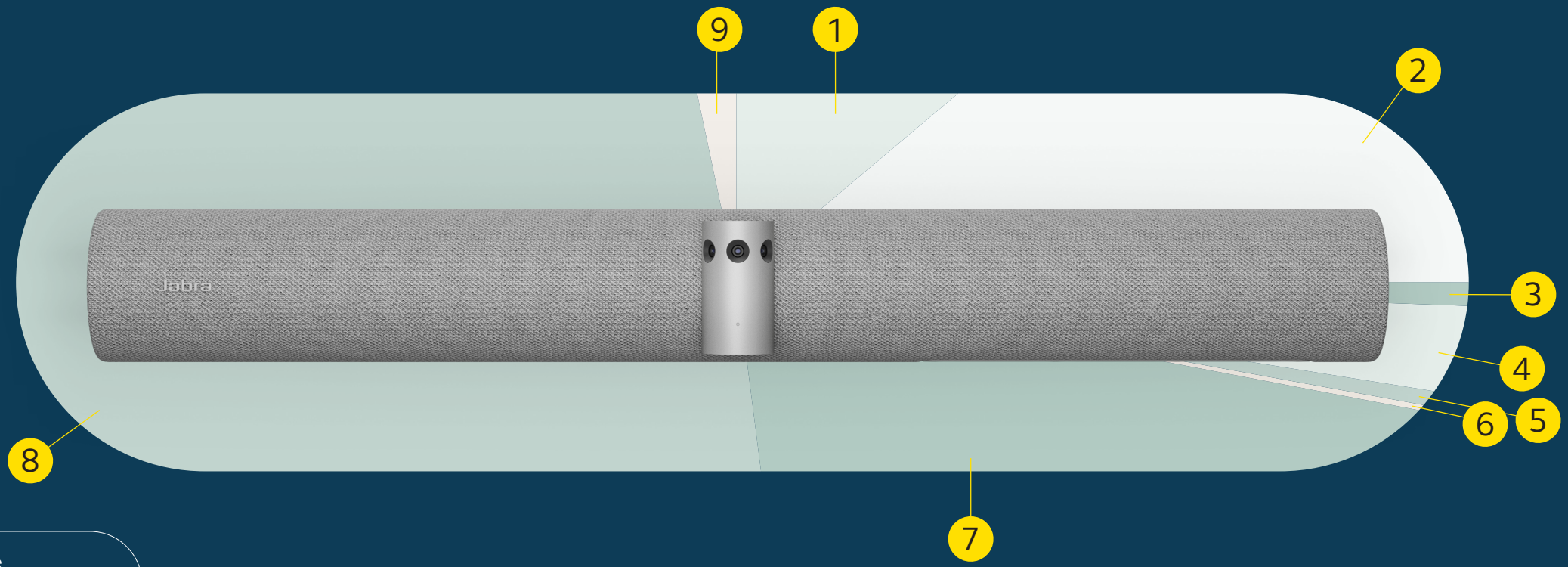

Main life cycle stages (% of total kg CO2e)

PANACAST 50

1	Plastics	6.76 kg CO2-eq	4.83%
2	Metals	27.56 kg CO2-eq	19.69%
3	Electronic components	2.61 kg CO2-eq	1.87%
4	Printed circuit board	10.01 kg CO2-eq	7.15%
5	Manufacturing	1.15 kg CO2-eq	0.82%
6	Packaging	0.54 kg CO2-eq	0.39%
7	Transport	20.64 kg CO2-eq	14.74%
8	Usage	69.43 kg CO2-eq	49.59%
9	End of life	1.31 kg CO2-eq	0.93%

Product carbon footprint

140.01

Bureau Veritas verified kg CO2eq

Resources
Processing
Manufacturing
Distribution
Use
End of life

All estimates of carbon footprint are uncertain. Jabra has followed the LCA reporting rules from ISO 14067:2018. The report has been verified according to ISO 14067-3 Specification with guidance for the verification and validation of GHG statements, ISO 14065 Requirements for Validation and Verification, & ISO 14066 Competence requirements for GHG validation teams and verification teams. The scope of the LCA is 2 years of use in London (UK) reflecting the average warranty period and average use case.

© 2022 GN Audio A/S. All rights reserved® Jabra is a registered trademark of GN Audio A/S.