HARDWARE GUIDE

MONDOPAD INF5720 / INF5722

InFocus

009-1553-05

CONTENTS

Declaration of Conformity 3
Safety Considerations 4
安全資訊 6
Information about this Hardware Guide 7
What's Included 8
Setup 9
- General mounting information 9
- Stand assembly 10
- Attach monitor to stand 11
- Attach the speakers 12
- Attach the HD video conferencing camera 13
- Connect to other devices 14
- Connect AC power 16
- External PC touchscreen control setup 16

Turn the Monitor On/Off 16
Set up the Wireless Mouse and Keyboard 17
- Wireless mouse 17
- Wireless keyboard 17

Use the Remote 18
Use the Keypad 20
OSD (On-Screen Display) Menu System 21
- Picture menu 22
- Screen menu 23
- Audio menu 24
- PIP menu 25
- Configuration 1 menu 26
- Configuration 2 menu 27
- Advanced option menu 28

Troubleshooting 29
Specifications 31
Limited Warranty 33

DECLARATION OF CONFORMITY

Manufacturer: InFocus Corporation, 13190 SW 68th Parkway, Suite 200, Portland, Oregon 97223-8368 USA

Trademarks

Apple, Mac and Facetime are trademarks or registered trademarks of Apple, Inc. Microsoft, Windows, PowerPoint, Excel and Word are trademarks or registered trademarks of Microsoft Corporation. Adobe and Acrobat are trademarks or registered trademarks of Adobe Systems Incorporated. HDMI logo and “High Definition Multimedia Interface” are registered trademarks of HDMI Licensing LLC. Manufactured under license from Dolby Laboratories. Dolby and the double-D symbol are trademarks of Dolby Laboratories. SRS TruSurround HD and SRS TruVolume are trademarks of SRS Labs, Inc. TruSurround HD and TruVolume technologies are incorporated under license from SRS Labs, Inc. InFocus, In Focus, INFOCUS (stylized), MondoCenter, Mondopad, BigTouch, and JTouch are either registered trademarks or trademarks of InFocus Corporation in the United States and other countries. All other trademarks are the property of their respective owners. Any other trademarks, service marks, personal names or product names are assumed to be the property of their respective owners and are used only for reference. There is no implied sponsorship, affiliation, certification, approval or endorsement if we use one of these terms.

FCC Warning

This equipment has been tested and found to comply with the limits for a Class A digital device, pursuant to part 15 of the FCC Rules. These limits are designed to provide reasonable protection against harmful interference when the equipment is operated in a commercial environment. This equipment generates, uses and can radiate radio frequency energy and, if not installed and used in accordance with the instruction manual, may cause harmful interference to radio communications. Operation of the equipment in a residential area is likely to cause harmful interference in which case the user will be required to correct the interference at his own expense.

Changes or modifications not expressly approved by InFocus Corporation may void authority to operate the equipment.

This device complies with part 15 of the FCC Rules. Operation is subject to the following two conditions: (1) This device may not cause harmful interference and (2) this device must accept any interference received, including interference that may cause undesired operation.

Canada

This Class A digital apparatus complies with Canadian ICES-003. Cet appareil numérique de la classe A est conforme à la norme NMB-003 du Canada.

EU/EEC (Standard EN 55022 Class A)

Warning: This is a class A product. In a domestic environment this product may cause radio interference in which case the user may be required to take adequate measures.

Warnung: Dieses ist eine Einrichtung der Klasse A. Diese Einrichtung kann im Wohnbereich Funk-Störungen verursachen; in diesem Fall kann vom Betreiber verlangt werden, angemessene Maßnahmen zu ergreifen und dafür aufzukommen.

This product operates at fundamental frequencies of 2.4 and 5 GHz. Each frequency outputs a maximum of 100 mW of power.

Dieses Produkt arbeitet mit Basis Frequenzen von 2.4 und 5GHz. Jeder dieser Frequenzbereiche sendet mit einer maximal Leistung von 100 mW.

이 기기는 업무용으로 전자파적합등록을 한 기기이오니 판매자 또는 사용자는 이 점을 주의하시기 바라며 만약 잘못 판매 또는 구입하였을 때에는 가정용으로 교환하시기 바랍니다.

申明: 此为A级产品，在生活环境中，该产品可能会造成无线电干扰。在这种情况下，可能需要用户对其干扰采取切实可行的措施。

警告使用者： 此為甲類資訊技術設備，於居住環境中使用時，可能會造成射頻擾動， 在此種情況下，使用者會被要求採取某些適當的對策。

This device complies with Industry Canada licence-exempt RSS standard(s). Operation is subject to the following two conditions: (1) this device may not cause interference, and (2) this device must accept any interference, including interference that may cause undesired operation of the device.

Le présent appareil est conforme aux CNR d'Industrie Canada applicables aux appareils radio exempts de licence. L'exploitation est autorisée aux deux conditions suivantes : (1) l'appareil ne doit pas produire de brouillage, et (2) l'utilisateur de l'appareil doit accepter tout brouillage radioélectrique subi, même si le brouillage est susceptible d'en compromettre le fonctionnement.

Equipment with Detachable Antenna(s) (E.g. Modular PCs)

Under Industry Canada regulations, this radio transmitter may only operate using an antenna of a type and maximum (or lesser) gain approved for the transmitter by Industry Canada. To reduce potential radio interference to other users, the antenna type and its gain should be so chosen that the equivalent isotropically radiated power (e.i.r.p.) is not more than that necessary for successful communication.

Conformément à la réglementation d'Industrie Canada, le présent émetteur radio peut fonctionner avec une antenne d'un type et d'un gain maximal (ou inférieur) approuvé pour l'émetteur par Industrie Canada. Dans le but de réduire les risques de brouillage radioélectrique à l'intention des autres utilisateurs, il faut choisir le type d'antenne et son gain de sorte que la puissance isotrope rayonnée équivalente (p.i.r.e.) ne dépasse pas l'intensité nécessaire à l'établissement d'une communication satisfaisante.

The radio transmitter provided with this system has been approved by Industry Canada to operate with the antenna type provided with the system by the manufacturer. Antennas not provided with this system are strictly prohibited for use with this device.

L’émetteur de radio équipé de ce système a été approuvé par Industrie Canada pour fonctionner avec le type d’antenne fourni avec le système par le fabricant. Antennes non pourvus de ce système sont strictement interdits pour une utilisation avec cet appareil.

INFORMATION FOR OPTICAL POINTING DEVICES ONLY / INFORMATION POUR LES DISPOSITIFS DE POINTAGE OPTIQUE SEULEMENT

This product uses LEDs that are inherently Class 1. / Ce produit utilize des DEL qui sont, par nature, de classe 1.

Agency Approvals

See product certification label.

This document applies to regulatory model: INF5720

Input ratings: 100-240V~ 50-60Hz, 3.5A

Output ratings:100-240V~ 50-60Hz 1A max

InFocus reserves the right to alter product offerings and specifications at any time without notice.

SAFETY CONSIDERATIONS

Please read and follow all safety instructions provided below and on the monitor before connecting the monitor to a power source. Failure to comply with safety instructions may result in fire, electrical shock, or personal injury and may damage or impair protection provided by the equipment. Please save all safety instructions.

- This monitor is very heavy and should be moved and installed by at least two individuals. Do not attempt to move or install the monitor yourself, otherwise injury and/or damage may occur.
- When moving the monitor, always hold the monitor firmly using the handles and side or bottom bezels. Do not hold the top bezel.
- When moving the monitor carton, do not tilt or invert the carton. Always keep it in an upright orientation.
- Disconnect all accessories and cables before moving the monitor.
- If the monitor is installed against the wall, maintain a distance of at least 1.98” (5cm) between the monitor and the wall to provide adequate ventilation.
- Refer to this guide for proper startup and shutdown procedures.
- Follow all warnings and cautions in this manual and on the monitor.
- Locate the monitor at least 4’ (1.2m) away from heating and cooling vents.
- Do not block ventilation openings. Locate the monitor in a well-ventilated area without obstructions to intake or exhaust vents.
- Do not install or use the monitor or speakers near any heat sources such as radiators, heat registers, stoves, or other devices (including amplifiers) that produce heat.
- Do not place the monitor in direct sunlight, humid, greasy or dusty places or in places where the monitor may come into contact with rain, smoke or steam.
- The monitor should not be used with the power cord near water, for instance, near a bathtub, washbowl, kitchen sink or swimming pool, etc.
- Do not use any components of the monitor, including the speakers, near water. Warning: To reduce the risk of fire or electric shock, do not expose this equipment or any component of this equipment to rain or moisture.
- Do not drop the monitor.
- Do not spill liquid on the monitor. Spilled liquid may damage the monitor.
- WARNING: If the monitor is installed against the wall or on a floor stand, the monitor must be securely attached to the wall or floor stand per installation instructions. Tipping, shaking, or rocking the monitor may cause injury or death.
- The power outlet used to power this monitor should be readliy accessible for fast disconnection in case of emergency.
- No naked flame source, such as lighted candles, should be placed on the monitor.

- Use the power cord provided. Connect the power cord to a receptacle with a protective safety (earth) ground terminal. A surge-protected power strip is recommended. Do not overload wall outlets.
- It is recommended that the Class 1 monitor be grounded.
- Do not install the monitor in places subject to mechanical vibration.
- Do not place the monitor on an unstable surface, which could result in serious personal injuries and monitor damage. When mounting the monitor to a stand, be sure to following the manufacturer's instructions. Use only the mounting hardware recommended by the manufacturer.
- When disconnecting the power cord, hold the plug, not the cord.
- Protect the power cord from being walked on or pinched particularly at plugs, convenience receptacles and the point where they exit from the monitor.
- Unplug the monitor if you are not going to use it for an extensive period of time.
- Unplug the monitor if you need to clean it with the included microfiber cleaning cloth. The screen may be wiped with the cleaning cloth when the power is off. Never use alcohol, solvents or ammonia-based liquids on this monitor.
- Wash hands after handling the cables supplied with this monitor.
- The monitor remote control, mouse and keyboard use batteries. Make sure the batteries' polarity (+/-) is aligned correctly. Dispose of used batteries in accordance with local disposal laws.
- Only use properly rated wall and stand mounting hardware that meet this product's specifications and follow the manufacturer installation instructions. The warranty does not cover any damage caused by use of improperly rated mounting hardware or from improper installation.
- Refer all service to qualified service personnel. Do not remove the cover or back. Servicing your own monitor can be dangerous to you and will void the warranty.
- Only use replacement parts specified by InFocus. Unauthorized substitutions may result in fire, electrical shock or injury and may void the warranty.
- When mounting the monitor to a wall, metric 8 (12mm) screws must be used. In addition, the mounting interface should comply with the UL1678 standard in North America. The mounting means should be strong enough to bear the weight of the monitor.
- The table stand is for use on desk and table surface only. Do not use the table stand as a floor stand. Injury or product damage could occur.
- Follow these instructions to help ensure image quality over the life of the monitor. Failure to follow these instructions may affect the warranty.
- Lithium Battery (in PC Box) Caution: There is a risk of explosion if the battery is replaced by an incorrect type. The battery should only be replaced with an identical or equivalent type of battery as recommended by the manufacturer. Dispose of used batteries in accordance with local disposal laws.

安全資訊

在將本產品連接到電源前，請仔細閱讀並遵守以下列出以及產品上的所有安全指示。未遵守安全指示可能會導致火災、電擊或人身傷害，並可 能破壞或損壞設備所提供的保護。請保存所有安全指示。

- 此顯示器非常重，至少需要兩個人移動並完成安裝。請勿自己嘗試移動或安裝顯示器，否則會造成傷害和/或損壞。
- 移動顯示器時，請務必使用手柄和側外框或底部外框牢牢托住顯示器。請勿抓握頂部外框。
- 移動顯示器包裝箱時，請勿傾斜或倒置包裝箱。始終保持直立。
- 移動顯示器前，請斷開所有配件和線纜。
- 如果將顯示器裝在牆上，請在顯示器和牆壁之間保留最少 1.98 英寸（5 釐米）的距離，以保持足夠通風。
- 有關正確開機和關機流程，請參閱本指南。
- 請遵循本手冊中以及顯示器上的所有警告和注意事項。
- 顯示器的擺放位置應與加熱和冷卻通風孔保留至少 4 英尺（1.2 米）的距離。
- 請勿堵塞通風口。將顯示器置於通風良好的區域，且進氣口或排氣口無阻塞。
- 請勿在散熱器、電熱器、火爐或其他產生熱量的設備（包括放大器）等熱源附近安裝或使用顯示器或條形音箱。
- 請勿將顯示器放在陽光直射、潮濕、油膩或積塵，或顯示幕可能接觸到雨水、煙霧或蒸汽的區域。
- 請勿在電源線靠近浴缸、洗臉盆、廚房水槽、游泳池附近等有水的區域使用顯示器。
- 請勿在靠近水的區域使用顯示器的任何元件，包括條形音箱。警告：要降低火災或電擊風險，請勿使本設備或其元件淋雨或受潮。
- 請勿拋擲顯示器。
- 請勿將液體濺灑在顯示器上。濺落的液體可能會損壞顯示器。
- 警告：必須按照安裝指示將本顯示器牢固地固定在地板/牆面上。傾斜、搖晃或搖動機器可能會造成人身傷害或致死。
- • 用於為此顯示器提供電力的電源插座應置於便於觸及的地方，以便在出現緊急情況時快速斷開連接。
- 請勿將點燃的蠟燭等明火火源放在顯示器上。
- 請使用附帶的電源線。將電源線連接到附帶防護安全（接地）接地端子的插座。建議使用具有電湧保護功能的電源板。請勿超負荷使用壁式插座。
- 建議將 1 類顯示器接地。
- 請勿將顯示器安裝到易受機械振動影響的地方。
- 請勿將顯示器置於不平整的表面，這可能會造成嚴重的人身傷害並會損壞顯示器。要將顯示器安裝在支架上，請務必遵守下列製造商指示。僅使用制 造商推薦的安裝硬體。
- 斷開電源線時，請握住插頭，切勿拉扯電線。
- 防止踩踏或擠壓電源線，尤其是電源插頭、插座以及在顯示幕上的出入點。
- 如果您長時間不打算使用顯示器，請拔掉顯示器插頭。
- 如果您需要使用附帶的超細纖維清潔布進行清潔，請拔掉顯示器插頭。電源關閉時，可使用清潔布擦拭螢幕。切勿在顯示器上使用酒精、溶劑或含氨 液體。
- 操作顯示器附帶的線纜後需要洗手。
- 顯示器遙控器利用電池工作。一些型號在發運時還附有採用電池工作的滑鼠和鍵盤。請確保電池極性 (+/-) 正確對齊。按照當地廢棄物品處理法規處理 廢舊電池。
- 僅使用符合此產品規格的適當耐火等級牆和支架安裝硬體，並遵守製造商的安裝指示。由額定安裝硬體使用不當或安裝不當造成的任何損壞均不在保 修範圍內。

- 請向專業維修人員諮詢所有維修資訊。請勿卸下封蓋或封底。自行維修顯示器不僅會對您造成傷害，而且也會使保修失效。
- 僅使用 InFocus 指定的更換零件。未經授權進行更換可能會造成火災、電擊或人身傷害，並可能使保修失效。
- 將顯示器安裝到牆上時，必須使用 8 枚公制（12 毫米）螺絲。此外，安裝介面應符合北美地區的 UL1678 標準。安裝方法應結實牢固，足以承受顯 示器的重量（參見產品技術規格）。
- 遵守這些指示有助於確保使用壽命內顯示器的圖像品質。不遵守這些指示可能會影響保修。
- 鋰電池注意事項（僅適用于發運時配有內嵌 PC 箱的型號）：如果更換的電池類型不正確，可能會有爆炸的風險。應按照製造商的建議，使用相同或同類型的電池進行更換。按照當地廢棄物品處理法規處理廢舊電池。

INFORMATION ABOUT THIS HARDWARE GUIDE

Although this product comes pre-installed with the Mondopad software, you must first assemble the product. This Hardware Guide will assist you in setting up the INF5720 and INF5722.

After the product is fully installed, please refer to the Mondopad Software Guide at www.infocus.com/support for more information.

WHAT'S INCLUDED

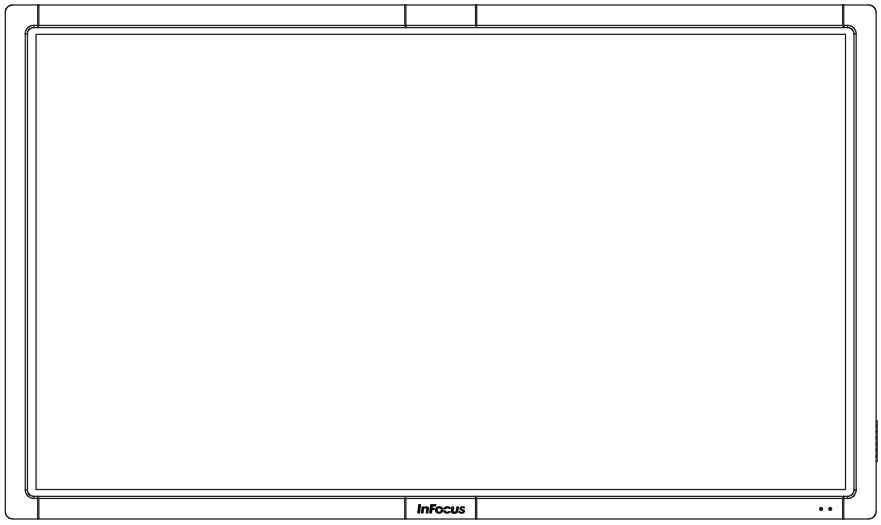

1920 x 1080 monitor

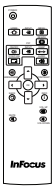

Remote control
(batteries not included)

Stylus
(2)

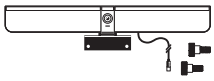

Camera

Power cord
(varies per country)

Documentation

Screws

Antennas

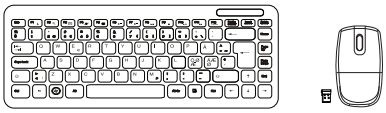

Wireless Mouse and Keyboard*
(batteries not included)

These items ship in a separate box

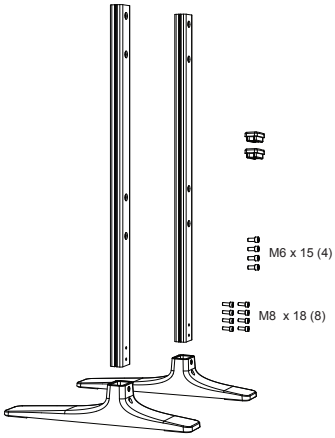

Table stand kit

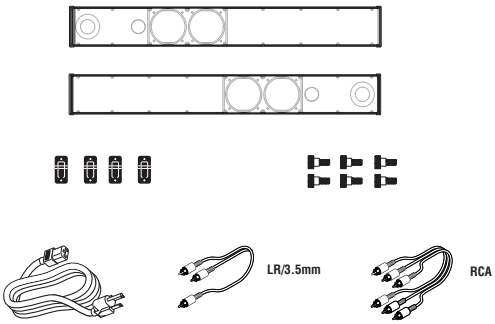

Speaker kit

*Not included for all countries. For setup purposes, a keyboard and mouse are recommended. For additional accessory options, such as carts and wall mounts, see the InFocus website (www.infocus.com/store) or your local dealer.

SETUP

General mounting information

This product ships with a table stand. It does not ship with any other mounting accessories. Only use commercially manufactured mounting accessories which meet this product's specifications and follow the manufacturer installation instructions.

- The table stand is for use on desk and table surface only. Do not use the table stand as a floor stand. Injury or product damage could occur.
- Only use properly rated wall and stand mounting hardware that meet this product’s specifications and follow the manufacturer installation instructions. The warranty does not cover any damage caused by use of improperly rated mounting hardware or from improper installation.
- To prevent damage to the screen surface, carefully place your monitor face-down on a clean, cushioned surface.
- When mounting the monitor to a wall, metric 8 (12mm) screws must be used. Use spring washers to prevent the screws from coming loose. In addition, the mounting interface should comply with the UL1678 standard in North America. The mounting means should be strong enough to bear the weight of the monitor.
- Do not install the monitor in places subject to mechanical vibration.
- Do not place the monitor on an unstable surface, which could result in serious personal injuries and monitor damage. When mounting the monitor to a stand, be sure to following the manufacturer’s instructions. Use only the mounting hardware recommended by the manufacturer.
- Do not install or use the monitor near any heat sources such as radiators, heat registers, stoves, or other devices (including amplifiers) that produce heat.
- Do not place the monitor in direct sunlight, humid, greasy or dusty places or in places where the monitor may come into contact with rain, smoke or steam.
- If the monitor is installed against the wall, maintain a distance of at least 1.98” (5cm) between the monitor and the wall to provide adequate ventilation.
- WARNING: If the monitor is installed against the wall or on a floor stand, the monitor must be securely attached to the wall or floor stand per installation instructions. Tipping, shaking, or rocking the monitor may cause injury or death.

Stand assembly

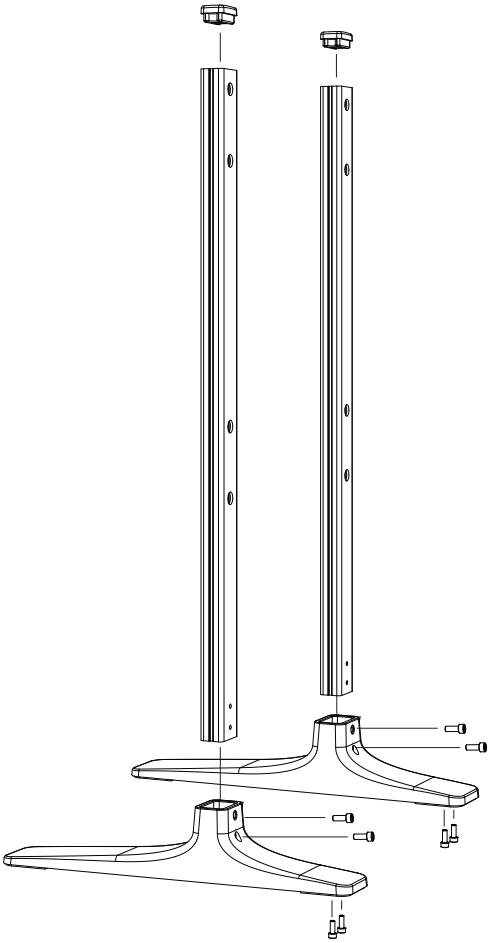

1) Place base feet flat on a table or other surface.

2) Insert support legs into base feet.

3) Using a 6mm Hex key and the provided M8 screws, secure the support legs to the base feet. (Two screws attach from the bottom of the feet and two from the back of the base feet for a total of four screws per foot/leg.)

4) Insert caps into the top of the support legs.

Attach monitor to stand

1) If you have not already done so, carefully place your monitor face-down on a cushioned, clean surface to protect the screen from damages and scratches.

2) Align the support legs to the back of the monitor with the longer side of the feet pointing towards the front of the monitor.

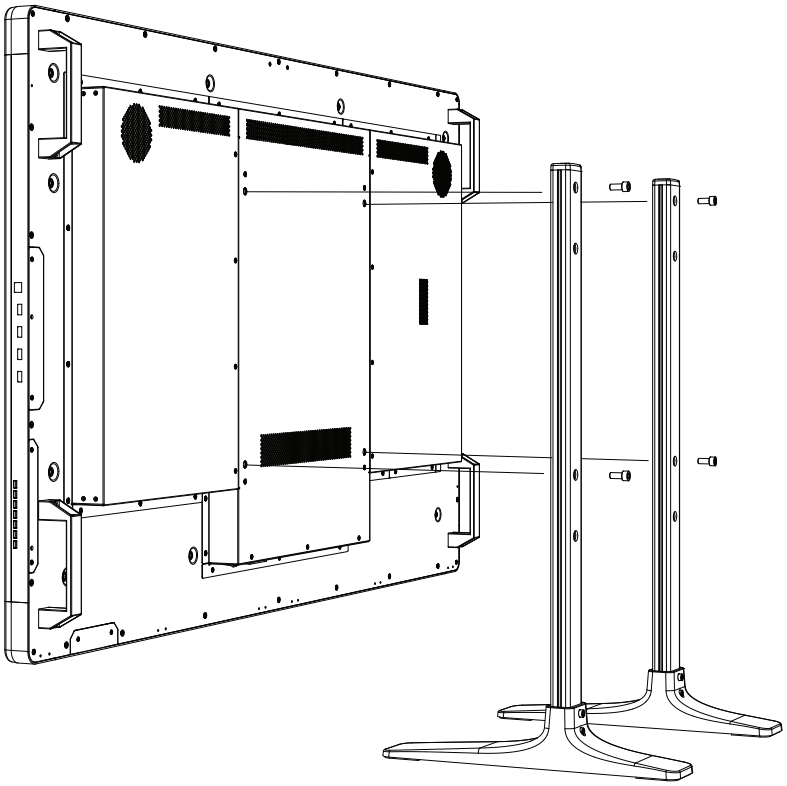

3) Using a 5mm Hex key, secure the support legs to the monitor with the provided M6 screws. **WARNING**: Multiple screw holes have been included in each support leg to allow you to adjust the height of the monitor. Regardless of the height, you must use two of the screw holes in each support leg. Failure to do so may result in the screw begin sheared off and the leg collapsing.

4) Using the handles on the back of the monitor, lift the monitor upright.

Attach the speakers

The speakers can be installed as desired around the perimeter of the monitor using the supplied brackets, however InFocus recommends installing the speakers across the bottom of the monitor. **NOTE:** If you are not attaching the speakers, proceed to the next section, "Attach the HD video conferencing camera" on page 13.

1) Carefully place your monitor face-down on a clean, cushioned surface. Do NOT place the monitor on its back.

2) Attach the four small rectangular brackets to the speakers with the provided screws as shown below.

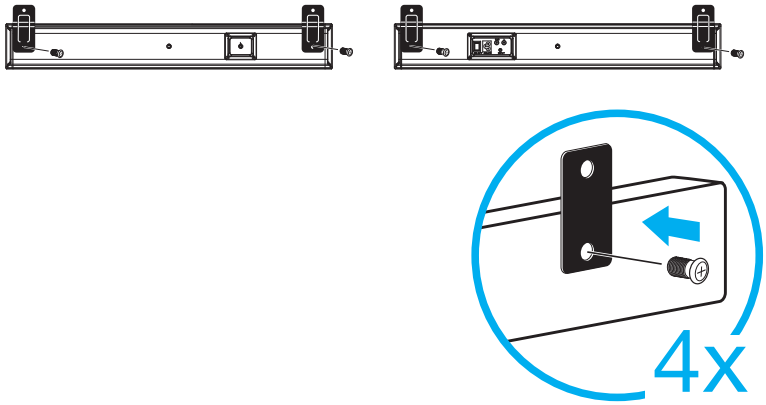

3) Align the rectangular brackets with the screw holes on the monitor and using the provided screws, secure the speakers against the bottom or the side of the monitor. **NOTE:** The bottom edge has multiple screw hole positions allowing for different placement options. Side placement requires special brackets (not included).

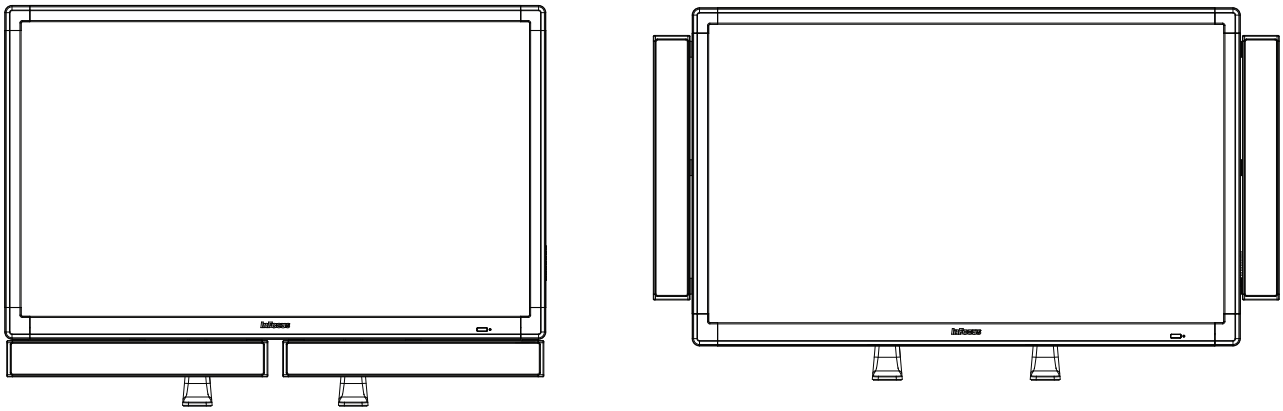

4) Connect one end of the AC power cord to the **Power** jack on the back of the speaker.

5) Connect the other end of the AC power cord to the **Power Out** jack on the bottom connector panel of the monitor.

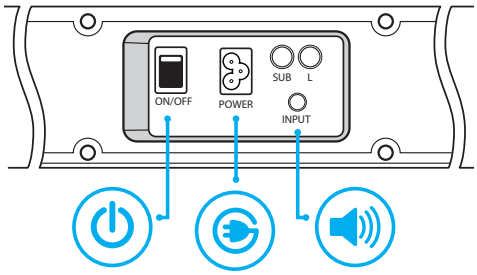

6) Connect the speakers together using the RCA audio cable and the **L** jacks.

7) Connect the 3.5mm audio cable from the speaker **Input** jack into the **Audio Out** (RCA R/L) jack on the side connector panel located on the back of the monitor.

8) Turn the power switch **ON**.

Attach the HD video conferencing camera

1) Remove the plastic film from the camera lens.

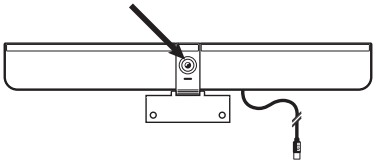

2) Align the camera bracket with the screw holes on the top edge of the backside of the monitor and then secure the camera to the monitor with the two provided thumb screws.

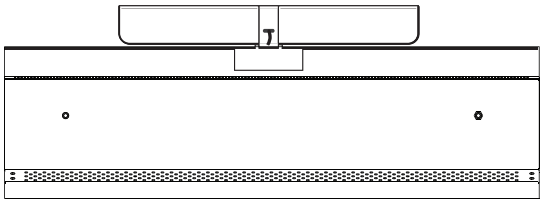

3) Plug the USB cable into the USB slot immediately below the camera on the back of the monitor.

4) Manually tilt and pan the camera (+/- 40°) as desired.

Connect to other devices

A full range of digital and analog video inputs and audio source devices can be connected to the connection panels on the back and side of the monitor. Available jacks include: HDMI In (2), PC In (1), Composite Video (1), Component RCA (1), RS232 (1), Audio In 3.5mm (1), Audio In RCA (1-R/L), Microphone In (1), RJ45 (2), USB-B for touch control (1), USB 2.0-A (4), USB 3.0-A (3), Audio Out RCA (1-R/L), and HDMI Out (1).

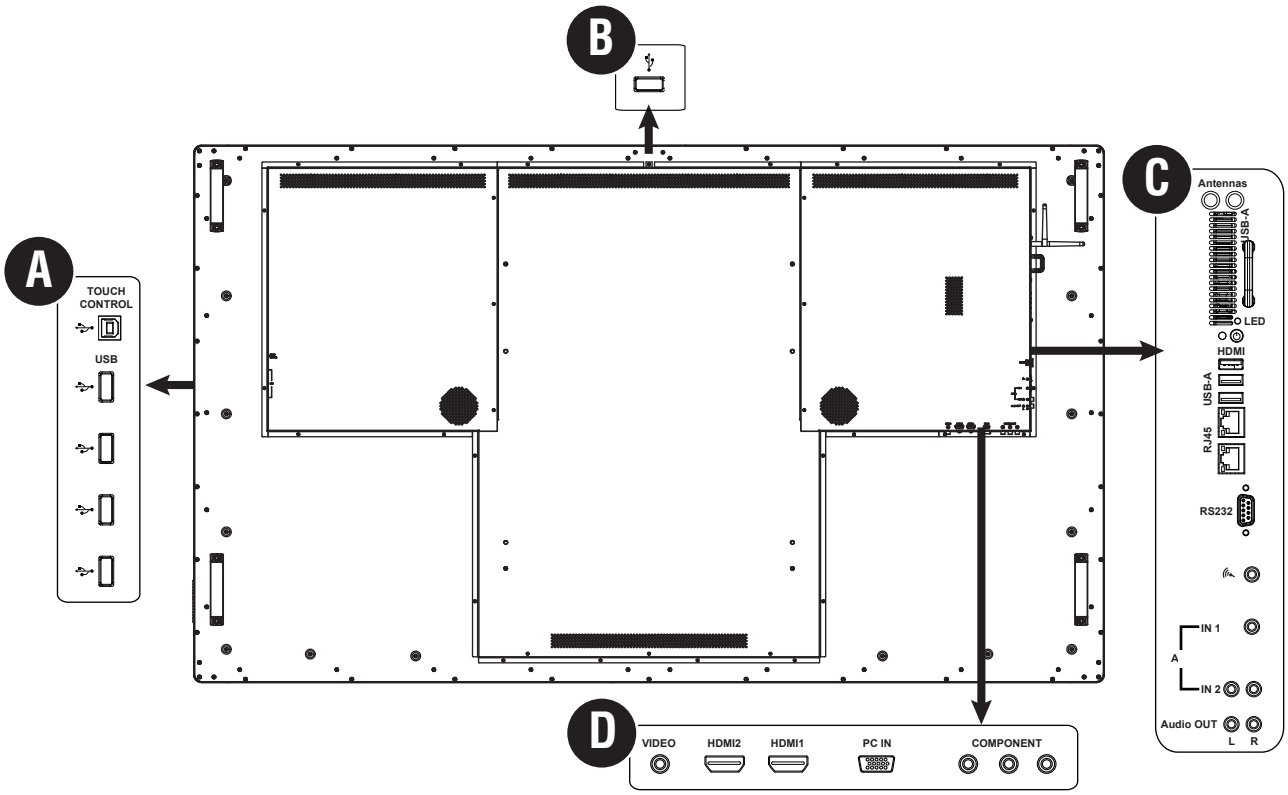

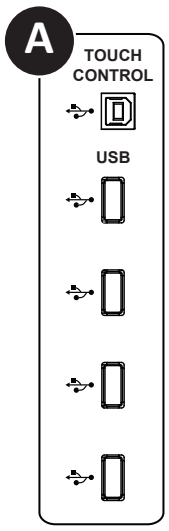	TOUCH CONTROL	Connect a Type A to Type B USB cable from the monitor to an external computer in order to use the touchscreen gestures on the monitor.
	USB	Connect a USB device to one of the USB Type A 2.0 connectors (e.g. USB thumb drive).

B	USB-A	Connect the camera or another USB device to this USB Type A 3.0 connector.

C	ANTENNAS	Receive and transmit wireless data.
	⏻	Press to turn on/off the embedded computer.
	HDMI OUT	Connect an HDMI cable from the embedded computer to another monitor.
	USB-A	Connect a USB device to one of the USB Type A 3.0 connectors (e.g. a USB 3.0 / 2.0 hard drive).
	RJ45	Connect to an Ethernet network.
	RS232	Connect to an RS232 control device for remote control applications.
	MIC	Connect a microphone to this jack.
	AUDIO IN1	Connect a 3.5mm audio cable to an external device (e.g., iPod player).
	AUDIO IN2	Connect a RCA L/R audio cable to an external device (e.g., DVD player).
	AUDIO OUT	Connect an RCA L/R audio cable to external stereo speakers.

D

VIDEO	Connect a composite video cable from the monitor to an external device (such as a VCR or DVD player).
HDMI2	Connect an HDMI cable from the monitor to an HDMI external device (such as a VCR or DVD player).
HDMI1	Connect an HDMI cable from the monitor to an HDMI external device (such as a VCR or DVD player).
PC IN	Connect a VGA computer cable from the monitor to an external computer.
COMPONENT	Connect a component RCA video cable from the monitor to an external device (such as a DVD player, HDTV device, or Laser Disc player) (YPbpr) signals.

Connect AC power

1) Connect one end of the AC power cord to the AC In jack on the back of the monitor.

2) Connect the other end of the AC power cord to an AC outlet.

3) Press the power switch. (The LED on the front of the monitor turns on.)

NOTES:

- Your monitor should only be operated from the power source indicated on the label.
- Always unplug the AC power cord from the power outlet when you are not using your monitor for an extended period of time.

External PC touchscreen control setup

1) Connect an external computer to the monitor using a DVI, HDMI, or VGA cable.

2) Connect the Type A to Type B USB cable to the USB Type A jack on the computer and to the USB Type B jack on the side of the monitor.

3) The computer can now be controlled by using touchscreen gestures on the monitor.

TURN THE MONITOR ON/OFF

1) Verify that the power cord is connected to a power outlet and that the power switch is **ON**.

2) Press the **Power** button on the remote or the right side of the monitor.

NOTES:

- If the monitor does not respond to normal power down procedures, press and hold the PC box **Power** button (located on the back of the monitor) for 7-8 seconds.
- By default, the monitor goes into system standby after 20 minutes of inactivity. To change this behavior, use the **Daytime Power Management** feature within the Mondopad software or make power option changes within the Windows Control panel.

SET UP THE WIRELESS MOUSE AND KEYBOARD

NOTE: The wireless mouse and keyboard is not included as a standard accessory for some countries. For initial setup and/or configuration, it may be easier to use a mouse and keyboard. Any standard wired or wireless mouse or keyboard can be connected through the monitor's USB ports.

Wireless mouse

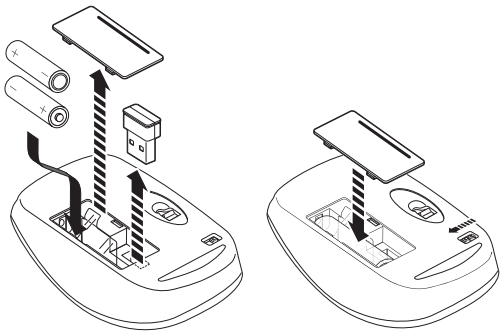

1) Turn the mouse over and remove the battery cover.
2) Remove the USB dongle from its holder in the battery compartment of the mouse.
3) Plug it into a free USB-A port on the monitor. You may be asked to go online to find the necessary drivers. If you are warned that the drivers have not been tested for compatibility, tap Continue installation to finish.
4) Insert two (2) AAA batteries (not included) into the mouse by aligning the + and – end of the batteries as indicated and sliding them in place.
5) Replace the cover and switch the mouse **ON** using the slide switch next to the battery bay.

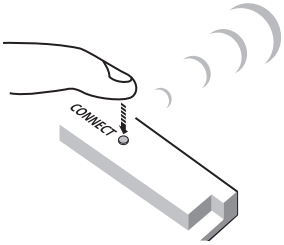

Wireless keyboard

1) Turn the keyboard over and open the battery cover.
2) Insert two (2) AAA batteries (not included) into the keyboard, by aligning the + and – ends of the batteries and sliding them in place.
3) Replace the cover.
4) Press the **CONNECT** button and hold it for one second to allow the keyboard to bind with the dongle.

USE THE REMOTE

The remote uses two (2) AAA batteries (not included). Install the batteries by removing the cover from the remote's back, aligning the + and – ends of the batteries, sliding them in place and replacing the cover.

To operate, point the remote at the monitor sensor at the bottom right-hand corner of the monitor. The range of optimum operation is about 26' (8m) and within a horizontal and vertical angle of 30 degrees.

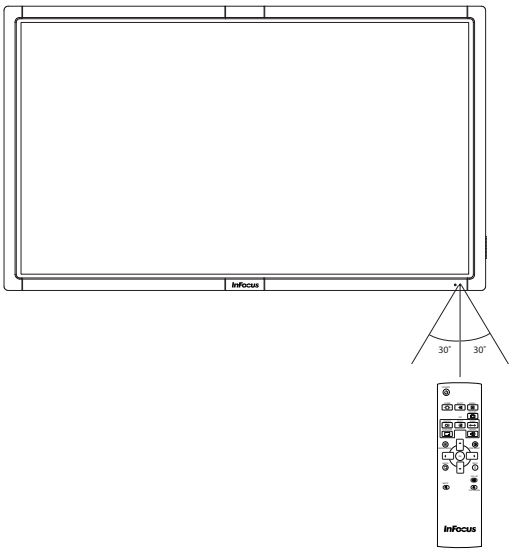

CAUTION:

- When disposing of the batteries, be sure to do so in an environmentally proper manner.
- If the remote control gets wet, wipe it dry immediately.
- Avoid excessive heat and humidity.
- Ensure the batteries' polarity (+/-) is properly aligned.
- Do not mix new and old batteries or different types of batteries together.
- Replace the batteries as soon as they run out.
- Remove batteries from the remote control when storing or not in use for a prolonged period.

Remote buttons

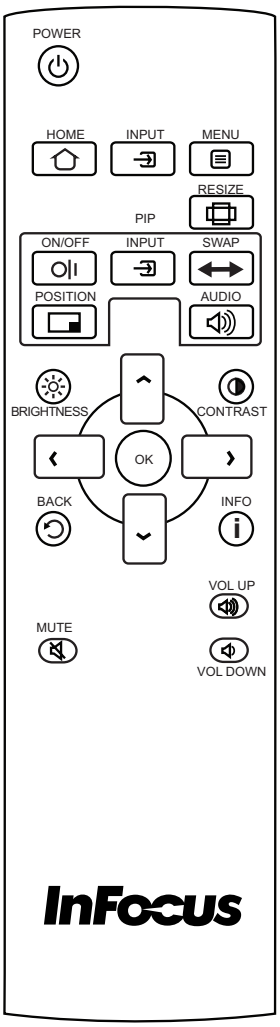

POWER	**Power:** Switches the power on or puts the monitor into Standby.
HOME	**Home:** Changes the active source back to the embedded PC.
INPUT	**Input:** Toggles the Input Source menu on and off, which allows the user to change sources. Options include: HDMI1, HDMI2, PC, and VGA.
MENU	**Menu**: Turns the OSD menu on and off.
RESIZE	**Resize:** Switches between screen modes. Modes vary based on the source.
PIP ON/OFF	**PiP On/Off:** Turns the PiP function on and off and changes the PiP configuration between two active PiP sources. Options include corner and side-by-side configurations (50%-resized, 25%-resized and 50%-fullscreen), depending on source types.
PIP INPUT	**PiP Input:** Switches the PiP window source. Options include HDMI1, HDMI2, PC, VGA, Component, S-video and Video. Note: The PiP window is not visible when a secondary source has not been selected.
PIP SWAP	**PiP Swap:** Switches the position of the main and secondary sources.
PIP POSITION	**PiP Position:** Moves the PiP window position from corner to corner (upper left, upper right, lower left, lower right).
PIP AUDIO	**PiP Audio:** Turns the PiP audio mix on and off.
BRIGHTNESS	**Brightness:** Opens the Brightness OSD menu. Use the right and left arrow buttons to adjust.
CONTRAST	**Contrast:** Opens the Contrast OSD menu. Use the right and left arrow buttons to adjust.
BACK	**Back:** Returns the user to the previous menu.
‹ › ^ ˇ OK	**Left, Right, Up, Down Arrows and OK:** Use these buttons to navigate through and make changes to the Onscreen Menu features.
INFO	**Info:** Displays source information.
VOL UP	**Vol up:** Increases the audio volume of the following sources: HDMI 1, HDMI 2, Audio In L/R, Audio In 3.5mm and Audio Out L/R. The microphone volume level is controlled by the PC volume controls.
VOL DOWN	**Vol down:** Decreases the audio volume of the following sources: HDMI 1, HDMI 2, Audio In L/R, Audio In 3.5mm and Audio Out L/R. The microphone volume level is controlled by the PC volume controls.
MUTE	**Mute:** Switches the audio on or off for the following sources: HDMI 1, HDMI 2, Audio In L/R, Audio In 3.5mm and Audio Out L/R.

USE THE KEYPAD

The keypad, located on the side of the monitor, has the following buttons:

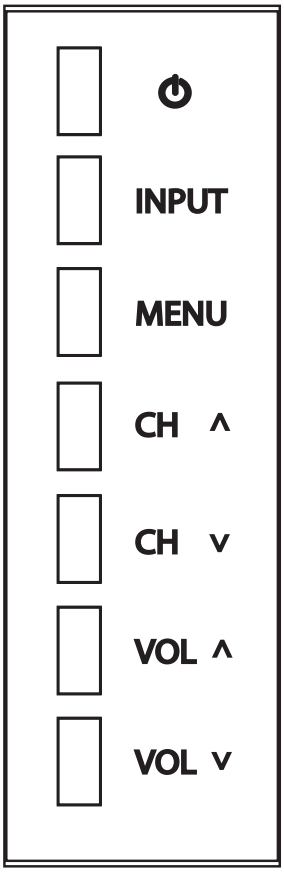

Power button: Switches the power on or puts the monitor into Standby.
Input button: Turns the Source menu on allowing the user to change sources. Saves changes/selections if the OSD menu is on.
Menu button: Turns the OSD menu on and off.
CH ^ button: Moves the highlight bar up when the OSD or Source menu is on.
CH v button: Moves the highlight bar down when the OSD or Source menu is on.
VOL ^ button: When the OSD menu is on, this button increases the value of selected OSD items. When the OSD menu is off, this button increases the audio volume of the following sources: HDMI 1, HDMI 2, Audio In L/R, Audio In 3.5mm and Audio Out L/R. The microphone volume level is controlled by the PC volume controls.
VOL v button: When the OSD menu is on, this button decreases the value of selected OSD items. When the OSD menu is off, this button decreases the audio volume of the following sources: HDMI 1, HDMI 2, Audio In L/R, Audio In 3.5mm and Audio Out L/R. The microphone volume level is controlled by the PC volume controls.

OSD (ON-SCREEN DISPLAY) MENU SYSTEM

The OSD provides the user the ability to control the monitor display. This is different than the Mondopad software described in the Mondopad Software Guide.

To access the OSD, press the **Menu** button on the remote or the keypad located on the right-hand side of the monitor.

Use the up and down arrows on the remote or keypad to scroll through the menu options and press **OK** to enter the highlighted menu. Use the up and down arrows and **OK** button to select the item you would like to adjust. Left and right arrow buttons are used to make adjustments.

When your adjustments are complete, press the **Back** button to go to a different menu or press the **Menu** button to exit the OSD menu entirely.

The following pages describe each of the OSD menus in detail.

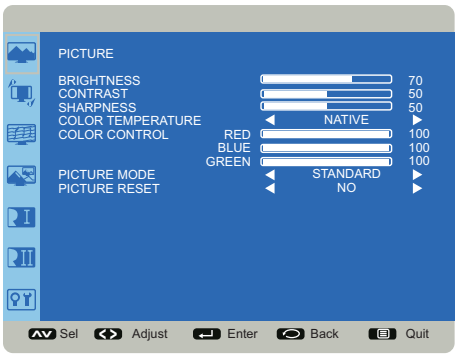

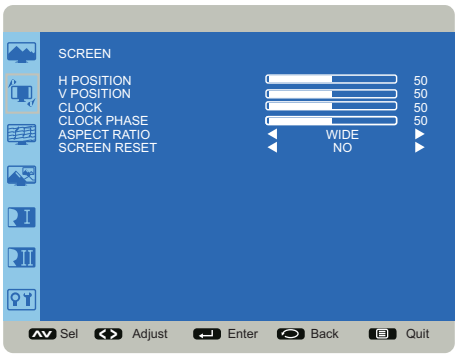

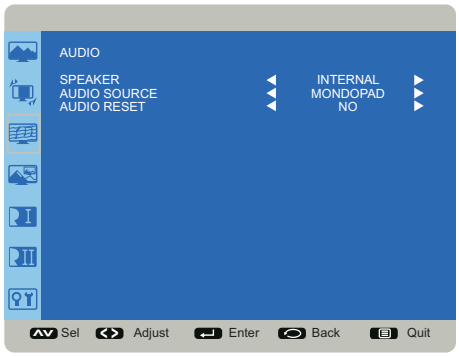

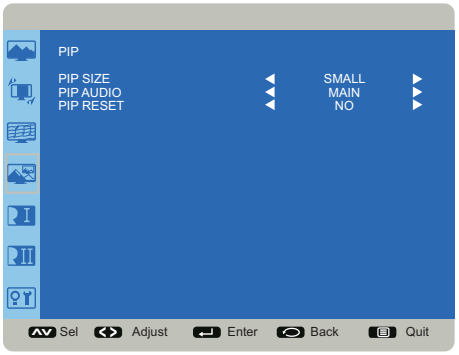

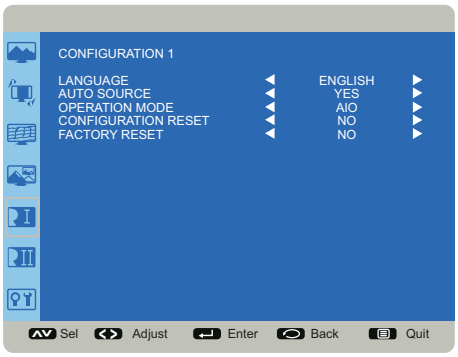

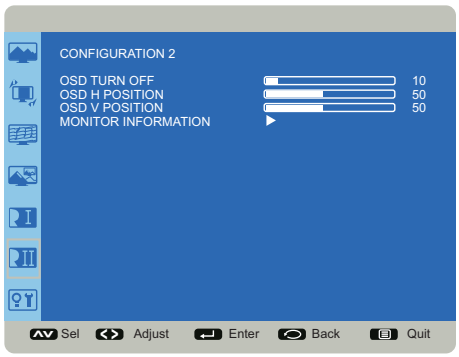

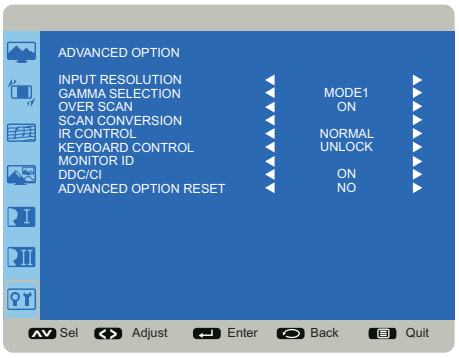

Picture menu

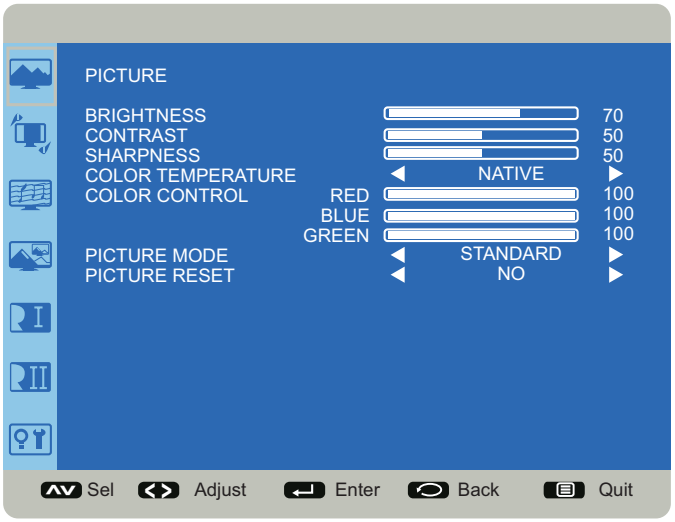

Brightness: changes the intensity of the image. Range: 0-100. (Default 70.)

Contrast: controls the degree of difference between the lightest and darkest parts of the picture and changes the amount of black and white in the image. Range: 0-100. (Default 50.)

Sharpness: changes the clarity of the edges of a video image. Range: 0-100. (Default 50.)

Color Temperature: changes the intensity of the colors. Options include: Native (default), User, 6500K, and 9300K.

Color Control: allows the user to finely adjust individual red, green and blue colors. Color Temperature must be set to User to access this feature. Range: 0-100 for each color.

Picture Mode: provides different preset picture modes to choose from. Options include: Standard (default), HighBright, and Soft.

Picture Reset: resets all Picture menu items to factory default settings. Options: Yes and No.

Screen menu

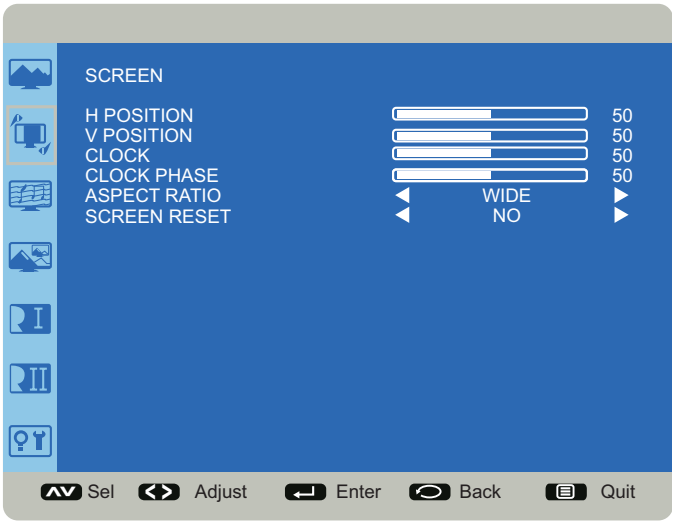

H Position: adjusts the horizontal position of the image. Range: 0-100. (Default 50.)

V Position: adjusts the vertical position of the image. Range: 0-100. (Default 50.)

Clock: adjusts the width of the image (For VGA input only). Range: 0-100.

Clock Phase: adjusts the focus, clarity and stability of the image (For VGA input only). Range: 0-100.

Aspect Ratio: adjusts the ratio of the image width to image height. Options: Auto, Native, 4:3, Wide, and Custom.

Screen Reset: resets all Screen menu items to factory default settings. Options: Yes and No.

Audio menu

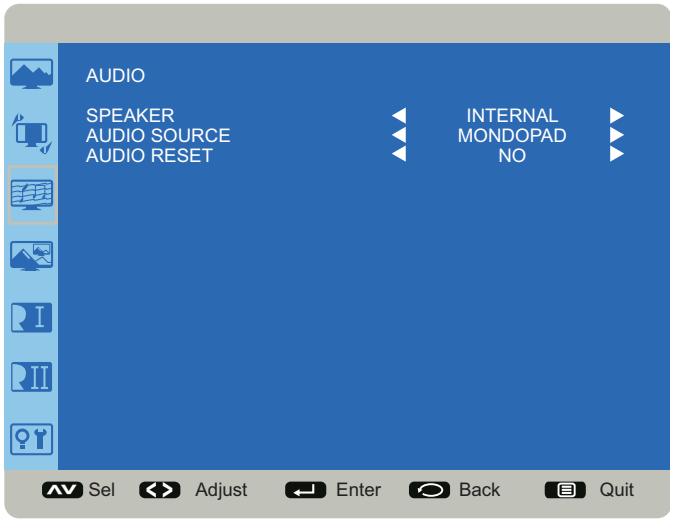

Speaker: controls whether both the internal and external speakers (sound bar, etc.) or just external speakers are used. Options include: Internal (both internal and external speakers operate) and External (only external speakers operate). Default Internal.

Audio Source: selects the audio input source. Options include: Mondopad (default), PC Speaker, HDMI 1, HDMI 2, Audio 1, and Audio 2.

Audio Reset: resets all Audio menu items to factory default settings. Options: Yes and No.

PIP menu

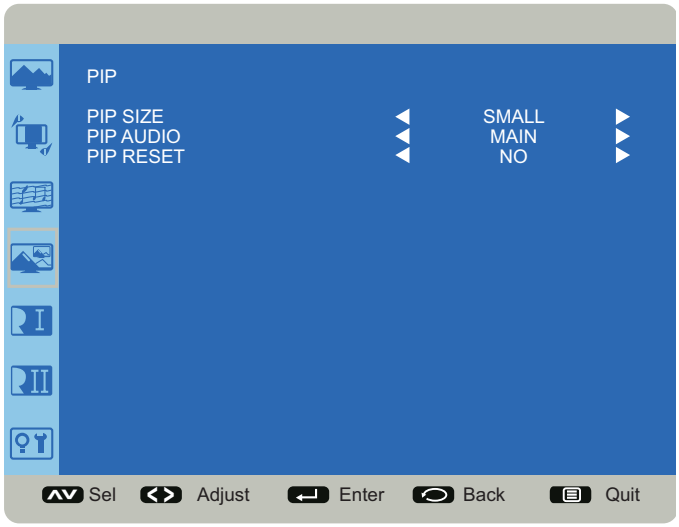

PIP Size: changes the size of the PiP window used in the Corner-to-Corner configuration. Options include: Small (default), Middle and Large.

PIP Audio: switches the audio source from the main source to the PiP source. Options include: Main (default) and Sub.

PIP Reset: resets all PIP menu items to factory default settings. Options: Yes and No.

The PiP feature allows the user to display two distinct sources simultaneously on the monitor. These are the supported combinations and configurations:

Input	HDMI1	HDMI2	PC	VGA	Component	Composite
HDMI1			✓	✓	✓	✓
HDMI2			✓	✓	✓	✓
PC	✓	✓		✓	✓	✓
VGA	✓	✓	✓		✓	✓
Component	✓	✓	✓	✓		✓
Composite	✓	✓	✓	✓	✓	

Configuration 1 menu

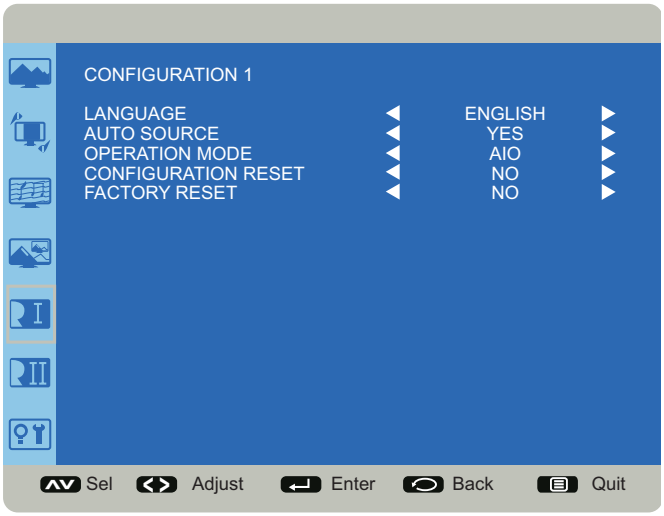

Language: switches the OSD menu language.

Auto Source: When enabled, automatically searches for an active source. Options: On (default) and Off.

Operation Mode: When Monitor is enabled, the monitor acts like a simple monitor and only displays external source devices. AIO (All-in-One) should only be enabled when the monitor is being upgraded to include a Mondopad embedded PC. Options: Monitor (default) and AIO.

Configuration Reset: resets all Configuration 1 and Configuration 2 menu items to factory default settings. Options: Yes and No.

Factory Reset: resets all menu items to factory default settings. Options: Yes and No.

Configuration 2 menu

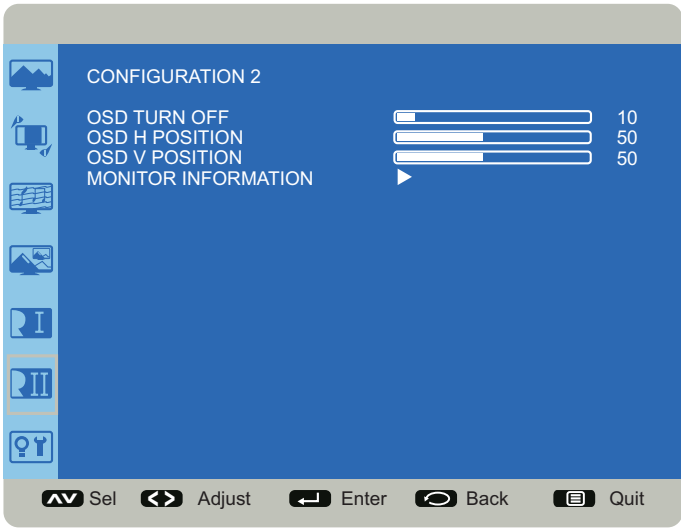

OSD Turn Off: controls how many seconds the OSD menu remains on the screen Range: 5-120 (seconds). (Default: 45)

OSD H Position: adjusts the horizontal position of the OSD menu. Range: 0-100. (Default: 50)

OSD V Position: adjusts the vertical position of the OSD menu. Range: 0-100. (Default: 50)

Monitor Information: This read-only submenu displays the model name, serial number, firmware version and amount of time the monitor has been powered on (hours/minutes).

Advanced option menu

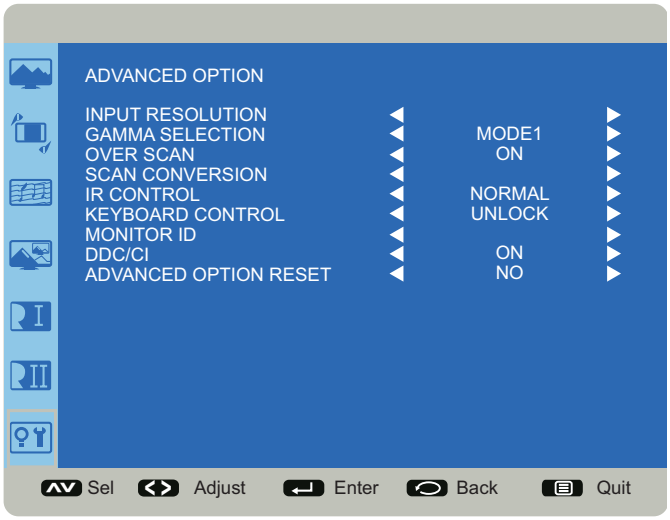

Input Resolution: sets the resolution of the VGA input. This is only required when the monitor is unable to detect the VGA input resolution correctly. Options include: 1024 x 768, 1280 x 768, 1360 x 768, 1366 x 768, 640 x 480, 720 x 480, 852 x 480, 800 x 600, 1064 x 600, 720 x 576, 1400 x1050, 1680 x 1050, 720 x 400, 640 x 400, 1440 x 900, 1600 x 900 and Auto.

Gamma Selection: adjusts the gamma value of the image and optimizes image brightness and contrast. Options include: Mode 1, Mode 2, Mode 3.

Over scan: removes noise around the edges of a video image. Options include: On and Off (default).

Scan Conversion: adjusts the conversion of source images. Options include: Interlace and Progressive (recommended).

IR Control: disables and enables the IR sensor on the monitor. Options include: Normal (default; IR is enabled) and Lock (IR is disabled).

Keypad Control: disables and enables the keypad on the right-hand side of the monitor. Options include: Lock (keypad is disabled) and Unlock (default; keypad is enabled).

Monitor ID: set the identification number of the monitor via the RS232C connection. Each monitor must have a unique identification number when multiple monitors are connected. Range: 1-26. (Default; 1)

DDC/CI: enables and disables DDC/CI communication. Options include: On (default) and Off.

Advanced Option Reset: resets all Advanced Option menu items to factory default settings. Options: Yes and No.

TROUBLESHOOTING

SYMPTOM	POSSIBLE SOLUTIONS
No power	• Verify the power cord is properly connected to the power outlet and to the monitor. • Verify the power switch is ON and that the Power button on the remote or keypad has been turned on (the front LED should be on). • Plug another electrical device to the power outlet to verify that the outlet is supplying the proper voltage.
The monitor shuts down suddenly	• Verify that a source is active. • The monitor may have overheated. Remove any objects blocking the vents. • Review the Windows power settings of the monitor.
No image	• If attempting to display an external source, see “No image from external source” below. • Verify that the monitor is turned on (the front LED should be white). • Verify that the monitor's PC is turned on (the PC LED on the back of the monitor should be solid green).
No image from external source	• Verify that connections between the source and the monitor have been made correctly. • Verify that the cables are in good condition. • Verify the correct input source is selected and that the input signal is compatible with the monitor.
The colors on the monitor do not look right	• Adjust the color settings in the Picture menu. • Reset the picture settings. • Verify that connections between the source and the monitor have been made correctly. • Verify that the cables are in good condition.
No touchpad activity with external computer	• Verify that the USB B to USB type A cable is plugged from the laptop into the monitor correctly. • Verify that the laptop’s operating system is Windows® 7 or 8. (The monitor touchpad does not support any other operating systems.)
Touchpad functions are not functioning consistently	• Remove all objects placed on the lip of the monitor and/or within 2” of the touchpad screen. • Disable the PiP feature. The monitor works best when the Mondopad software is the main image displayed. • Power the device off and back on after a few seconds. Re-booting the device helps the touchpad to re-synchronize.
Remote is not working	• Make sure the batteries are installed in the proper orientation and are not dead. • Verify the remote is turned on (the button is on the bottom of the remote). • Verify you are pointing the remote at the table and are within 26’ (8m) and 30 degrees (horz/vert) of the sensor. • Verify that the IR Control setting in the Advanced Option OSD menu is set to Normal.

Keypad and/or mouse is not working	• Make sure the batteries are installed in the proper orientation and are not dead. • Press the Connect button on the bottom of the keypad. • Verify the USB adapter is installed into the monitor's USB port. • Verify that the Keyboard Control setting in the Advanced Option OSD menu is set to Unlock.
Audio noise	• Noise can occur when infrared communication equipment (for example, infrared cordless headphones) is used near the monitor. Move the infrared communication equipment away from the monitor to eliminate the noise.
No sound	• If using the supplied speakers, verify that the speakers are connected properly and that the speaker power switch is turned on. • If the speakers or an external sound system is not being used, verify that the Audio menu Speaker setting is set to Internal. • If using an external source, such as component, verify that an audio cable is correctly installed between the device and the monitor. • Using the remote, verify the volume is turned up enough and not muted. • If using the Mondopad software, verify that the volume is not muted in the application. (Look at the speaker icon in the upper right-hand corner of the Mondopad software.) • If playing a video, verify the playback has not been paused and that the video's audio has not been muted. • An HDMI® 1.3 (or higher) source and source device is required to hear audio via the HDMI cable.
Video camera is not in focus	• Verify that the plastic protecting the camera lens has been removed.

LED Indicators

FRONT LED (near IR sensor)	**PC LED (back of the monitor)**	**SOLUTION**
Off	Off	• The monitor is powered off. Press the **Power** button on the remote or keypad. If that does not work: 1) verify the power cord is properly connected to the power outlet and to the monitor; 2) verify that the power switch on the back of the unit is turned on; 3) plug another electrical device to the power outlet to verify that the outlet is supplying the proper voltage.
Off	Blinking Green	• The monitor is in standby mode. Press the **Power** button on the remote or keypad.
White	Green	• The monitor is powered on.
Orange	n/a	• Contact InFocus Support at www.infocus.com/support.

For additional troubleshooting support, please contact:

InFocus Corporation - Technical Support

6am-5pm PST

877-388-8385

www.infocus.com/support

SPECIFICATIONS

To read the latest product specifications, be sure to visit our support website at www.infocus.com/support, as specifications are subject to change.

Size (viewable)	57.51"(1460.68mm) diagonal
Dimensions (without stand)	54.65" W x 33.71H x 3.59" D (1388.1 x 856.4 x 91.2 mm)
Weight (without stand)	116.88lbs (53.015 kg)
Monitor Type	TFT-LCD
Refresh Rate	50HZ/60HZ
Maximum Resolution	1920 x 1080
Pixel Pitch	0.2205(H) x 0.6680(V)
Dynamic Contrast Ratio	5000:1
Response Time	9.5ms
Brightness	370 nits
Viewing Angle	176° (H)/176° (V)
Processor	Intel Core i7-4770T, Q87 chipset
Memory	8 GB RAM
Operating System	Windows 7 Pro 64 bit
Speakers	Integrated: Stereo 10W x 2
Inputs	HDMI In (2), PC In (1), Composite Video (1), Component RCA (1), RS232 (1), Audio In 3.5mm (1), Audio In RCA (1-R/L), Microphone In (1), RJ45 (2), USB-B for touch control (1), USB-A 2.0 (4), and USB-A 3.0 (3).
Outputs	Audio Out RCA (1 – R/L), HDMI Out (1)
Wireless Network	802.11n
OSD Language	English, Spanish, French
Ambient Light Sensor	Yes
Certifications	FCC Class A
Input Ratings	100-240V~ 50-60Hz, 3.5A
Output Ratings	100-240V~ 50-60Hz 1A max

Camera

Resolution	1280 x 960 pixels
Frame rate	720p/30 fps
Lens and Field of View	F 2.0 Wide angle low-distortion lens, IR filter, DFOV 82˚, HFOV 70˚, VFOV 56˚
Audio support	2 built-in unidirectional microphones
Interface	USB 3.0 / USB 2.0
Focus	Fixed focus
Tilt	Up/down ±40˚, left/right 40˚
Power	Rating:+5Vdc,0.5A Via USB

Speakers

Power	120-240VAC, 50-60Hz
Speaker Drivers Left and Right Channels	Two 3” and one ¾” Aluminum Neodymium Tweeter (per side)
Enclosure Type	Sealed
Speakers Frequency Response	90Hz to 20kHz
Sound Pressure Level (max vol@1m, pink noise)	98dB SPL
Signal to Noise Ratio (SNR)	110dB
Amplifier Type	High efficiency Class D amplifier
Power Output: Watts/Channel (RMS)	25 watts/channel @ 1% THD, 1KHz, 2-channels drive
Power Output: Total Watts (RMS)	50 watts total system
Power Output: Total Watts (Peak)	70 watts total system
Power Input Voltage	90-264 VAC, 50/60Hz, 1.5 amps
Rated Power Consumption	150 watts
Standby Power Consumption	3 watts

Keyboard

Dimension	321 x 142 x 25.4mm
Weight	~350g excluding batteries
Batteries	Two (2) AAA alkaline
Operating Voltage	2.0V~3.2VDC
Power Consumption	Operation mode: 10mA; Sleep Mode: <60uA
Battery Life	800 working hours continuous operation
Operating Distance	10M without signal disturbance and no direction limit

Mouse

Dimension	59.2 x 103.6 x 34.8mm
Weight	~68g excluding batteries
Batteries	Two (2) AAA alkaline
Operating Voltage	2.0V~3.2VDC
Power Consumption	<8.5mA @3V
Battery Life	150 working hours continuous operation
Operating Distance	10M without signal disturbance and no direction limit

LIMITED WARRANTY

InFocus Limited Warranty For InFocus Branded Hardware Products Only

LIMITED WARRANTY. InFocus's warranty obligations for the hardware products are limited to the terms set forth herein. InFocus warrants the InFocus-branded hardware products against defects in materials and workmanship under normal use for a period outlined in the Limited Warranty Periods section below from the date of retail purchase by the original end-user purchaser ("Warranty Period"). The Warranty Period starts on the date of purchase. Your dated sales or delivery receipt, showing the date of purchase of the product, is your proof of the purchase date. You may be required to provide proof of purchase and proof that the product was purchased new as a condition of receiving warranty service. If a hardware defect arises and a valid claim is received within the Warranty Period, at its option and to the extent permitted by law, InFocus will either (1) repair the hardware defect at no charge, using new parts or refurbished parts that are equivalent to new in performance and reliability, (2) exchange the product with a product that is new or refurbished that is equivalent to new in performance and reliability and is at least functionally equivalent to the original product, or (3) refund the purchase price of the product. InFocus may request that you replace defective parts with customer-installable new or refurbished parts that InFocus provides in fulfillment of its warranty obligation ("Customer Self Repair"). A replacement product or part, including a Customer Self Repair part that has been installed in accordance with instructions provided by InFocus, assumes the remaining warranty of the original product or ninety (90) days from the date of replacement or repair, whichever provides longer coverage. When a product or part is exchanged, any replacement item becomes your property and the replaced item becomes InFocus's property. Parts provided by InFocus in fulfillment of its warranty obligation must be used in products for which warranty service is claimed. When a refund is given, the product for which the refund is provided must be returned to InFocus and becomes InFocus's property. This is your exclusive remedy for defective products.

Limited Warranty Periods vary depending on your product model and the country of purchase. To review the warranty period associated with your product model, please refer to the product specifications information on www.infocus.com. By inputting your product model in the Quick Search box on the website, you will find warranty terms in the Specifications matrix.

EXCLUSIONS AND LIMITATIONS. This Limited Warranty applies only to the hardware products manufactured by or for InFocus, and sold by InFocus, its worldwide subsidiaries, authorized resellers or country distributors, that can be identified by the "InFocus" trademark, trade name, or logo affixed to it, and to required firmware. The Limited Warranty does not apply to any non-InFocus hardware products or peripherals external to the InFocus-branded hardware products (including but not limited to external storage subsystems, displays, printers, speakers or other peripherals), or to any software applications or programs, even if packaged or sold with the InFocus hardware. Manufacturers, suppliers, or publishers of products, software or peripherals, other than InFocus, may provide their own warranties to the end user purchaser, but InFocus, in so far as permitted by law, provides their products "AS IS" without the InFocus Limited Warranty. Software distributed by InFocus with or without the InFocus brand name (including, but not limited to system software) is not covered under this Limited Warranty. Refer to the licensing agreement accompanying the software for details of your rights with respect to its use.

InFocus does not warrant that the operation of the products will be uninterrupted or error-free. InFocus is not responsible for damage arising from failure to follow instructions relating to the products' use.

INFOCUS IS NOT RESPONSIBLE FOR DAMAGE TO OR LOSS OF ANY PROGRAMS, DATA, OR REMOVABLE STORAGE MEDIA. INFOCUS IS NOT RESPONSIBLE FOR THE RESTORATION OR REINSTALLATION OF ANY PROGRAMS OR DATA OTHER THAN SOFTWARE INSTALLED BY INFOCUS WHEN THE PRODUCT IS MANUFACTURED.

To enable InFocus to provide the best possible support and service during the Limited Warranty Period, you will be required to:

- Maintain a proper and adequate environment, and use the InFocus hardware products in accordance with the instructions furnished.
- Verify configurations, load most recent firmware, install software patches, run InFocus diagnostics and utilities, and implement temporary procedures or workarounds provided by InFocus while InFocus works on permanent solutions.
- Allow InFocus to keep resident on your systems or sites certain system and network diagnosis and maintenance tools to facilitate the performance of warranty support (collectively referred to as “Proprietary Service Tools”); Proprietary Service Tools are and remain the sole and exclusive property of InFocus.

Additional Limitations:

- Products external to the system processor (CPU) box, such as external storage subsystems, printers and other peripherals, are covered by the applicable warranty for those products or options.
- An effective repair does not necessarily require the replacement of a defective part. For example, cleaning the heads of a floppy drive or updating revision levels of ROM BIOS on a PCA board are activities that in many instances deliver an effective repair.
- BIOS/Firmware upgrades are not covered under the Limited Warranty. Firmware that is an integral part of the option hardware board is not automatically upgraded when new versions of firmware are released.
- It is the responsibility of the customer to ensure that their software is compatible with the latest BIOS/firmware revision.

This Limited Warranty does not apply: (a) to consumable or expendable parts, such as batteries, or protective coatings designed to diminish over time unless failure has occurred due to a defect in materials or workmanship; (b) to cartons, carrying cases, shipping cases, external cabinets, accessories used in connection with the product; (c) to cosmetic damage, including but not limited to scratches, dents, and broken plastic on ports; (d) to damage caused by use with non-InFocus products; (e) to damage caused by accident, abuse, misuse, improper ventilation, smoke exposure, contamination, improper or inadequate maintenance, cleaning or calibration, liquid contact, unusual physical or electrical stress and/or power surges, virus infection, fire, earthquake, disaster, lightning or other external causes; (f) to damage caused by operating the product outside the permitted or intended uses or usage parameters described by InFocus (including burned monitor screens and incorrect input voltage); (g) to damage caused by service (including upgrades and expansions) performed by anyone other than a representative of InFocus or an InFocus Authorized Service Provider (“ASP”) or your own installation of customer-installable parts as instructed by InFocus; (h) to a product or part that has been modified to alter functionality or capability without the written permission of InFocus (including use of an unauthorized mount); (i) to defects caused by normal wear and tear or otherwise due to the normal aging of the product; (j) to failure to follow maintenance procedures as outlined in the product user documentation including where a schedule is specified for regular cleaning of certain parts (based on usage and environment); (k) to loss or damage in transit; or (l) if the product is not used under normal operating conditions which are defined as use not in excess of 16 hours continuously per day with a minimum 8 hour period of continuous rest in the powered off state; or (m) if any InFocus serial number has been removed or defaced. In addition, LCD burn-in as a result of excessive display of static images on the product is not covered under the terms of this Limited Warranty.

Important: Do not open the hardware products unless otherwise directed by InFocus for the purposes of a Customer Self Repair (CSR). Opening the hardware products may cause damage that is not covered by this Limited Warranty. Only InFocus or an ASP should perform service on the hardware products.

TO THE EXTENT PERMITTED BY LAW, THIS WARRANTY AND THE REMEDIES SET FORTH ABOVE ARE EXCLUSIVE AND IN LIEU OF ALL OTHER WARRANTIES, REMEDIES AND CONDITIONS, WHETHER ORAL, WRITTEN, STATUTORY, EXPRESS OR IMPLIED. AS PERMITTED BY APPLICABLE LAW, INFOCUS SPECIFICALLY DISCLAIMS ANY AND ALL STATUTORY OR IMPLIED WARRANTIES, INCLUDING, WITHOUT LIMITATION, WARRANTIES OF MERCHANTABILITY AND FITNESS FOR A PARTICULAR PURPOSE AND WARRANTIES AGAINST HIDDEN OR LATENT DEFECTS. IF INFOCUS CANNOT LAWFULLY DISCLAIM STATUTORY OR IMPLIED WARRANTIES THEN TO THE EXTENT

PERMITTED BY LAW, ALL SUCH WARRANTIES SHALL BE LIMITED IN DURATION TO THE DURATION OF THE EXPRESS WARRANTY AND TO THE REPAIR OR REPLACEMENT SERVICE AS DETERMINED BY INFOCUS IN ITS SOLE DISCRETION. No InFocus reseller, agent, or employee is authorized to make any modification, extension, or addition to this warranty. If any term is held to be illegal or unenforceable, the legality or enforceability of the remaining terms shall not be affected or impaired.

EXCEPT AS PROVIDED IN THIS WARRANTY AND TO THE MAXIMUM EXTENT PERMITTED BY LAW, INFOCUS IS NOT RESPONSIBLE FOR DIRECT, SPECIAL, INCIDENTAL OR CONSEQUENTIAL DAMAGES RESULTING FROM ANY BREACH OF WARRANTY OR CONDITION, OR UNDER ANY OTHER LEGAL THEORY, INCLUDING BUT NOT LIMITED TO LOSS OF USE; LOSS OF REVENUE; LOSS OF ACTUAL OR ANTICIPATED PROFITS (INCLUDING LOSS OF PROFITS ON CONTRACTS); LOSS OF THE USE OF MONEY; LOSS OF ANTICIPATED SAVINGS; LOSS OF BUSINESS; LOSS OF OPPORTUNITY; LOSS OF GOODWILL; LOSS OF REPUTATION; LOSS OF, DAMAGE TO, COMPROMISE OR CORRUPTION OF DATA; OR ANY INDIRECT OR CONSEQUENTIAL LOSS OR DAMAGE HOWSOEVER CAUSED INCLUDING THE REPLACEMENT OF EQUIPMENT AND PROPERTY, ANY COSTS OF RECOVERING, PROGRAMMING OR REPRODUCING ANY PROGRAM OR DATA STORED IN OR USED WITH THE INFOCUS PRODUCT AND ANY FAILURE TO MAINTAIN THE CONFIDENTIALITY OF DATA STORED ON THE PRODUCT. THE FOREGOING LIMITATION SHALL NOT APPLY TO DEATH OR PERSONAL INJURY CLAIMS, OR ANY STATUTORY LIABILITY FOR INTENTIONAL AND GROSS NEGLIGENT ACTS AND/OR OMISSIONS. INFOCUS DISCLAIMS ANY REPRESENTATION THAT IT WILL BE ABLE TO REPAIR ANY PRODUCT UNDER THIS WARRANTY OR MAKE A PRODUCT EXCHANGE WITHOUT RISK TO OR LOSS OF PROGRAMS OR DATA.

Limitation on Bringing Action: No action, regardless of form, arising out of the agreement to purchase the Product may be brought by purchaser more than one year after the cause of action has accrued. Governing Law: Any action, regardless of form, arising out of the agreement to purchase the Product is governed by the laws of the State of Oregon, U.S.A. Mandatory Arbitration – Any action, regardless of form, arising out of the agreement to purchase the Product is subject to mandatory arbitration.

ADDITIONAL RIGHTS. FOR CUSTOMERS, WHO ARE COVERED BY CONSUMER PROTECTION LAWS OR REGULATIONS IN THEIR COUNTRY OF PURCHASE OR, IF DIFFERENT, THEIR COUNTRY OF RESIDENCE, THE BENEFITS CONFERRED BY THIS WARRANTY ARE IN ADDITION TO ALL RIGHTS AND REMEDIES PROVIDED BY SUCH CONSUMER PROTECTION LAWS AND REGULATIONS. THIS WARRANTY DOES NOT EXCLUDE, LIMIT OR SUSPEND ANY RIGHTS OF CONSUMERS ARISING OUT OF NONCONFORMITY WITH A SALES CONTRACT. SOME COUNTRIES, STATES AND PROVINCES DO NOT ALLOW THE EXCLUSION OR LIMITATION OF INCIDENTAL OR CONSEQUENTIAL DAMAGES OR ALLOW LIMITATIONS ON HOW LONG AN IMPLIED WARRANTY OR CONDITION MAY LAST, SO THE LIMITATIONS OR EXCLUSIONS DESCRIBED BELOW MAY NOT APPLY TO YOU. THIS WARRANTY GIVES YOU SPECIFIC LEGAL RIGHTS, AND YOU MAY ALSO HAVE OTHER RIGHTS THAT VARY BY COUNTRY, STATE OR PROVINCE. INFOCUS, THE WARRANTOR UNDER THIS LIMITED WARRANTY, IS IDENTIFIED AT THE END OF THIS DOCUMENT.

EXTENDED WARRANTIES. InFocus extended product warranties are available for an additional charge. For further information on InFocus extended product warranties, please contact InFocus or your product reseller.

OBTAINING WARRANTY SERVICE. Please access and review the online help resources located at www.infocus.com/support before seeking warranty service. If the product is still not functioning properly after making use of these resources, please contact InFocus Technical Support or, if applicable, an ASP using the information provided below. When contacting InFocus via telephone, other charges may apply depending on your location. When calling, InFocus Technical Support or an ASP will help determine whether your product requires service and, if it does, will inform you how InFocus will provide it. You must assist in diagnosing issues with your product and follow InFocus's warranty processes. InFocus may restrict service to the country where InFocus or its Authorized Distributors originally sold the hardware product. InFocus will provide warranty service either (i) at an ASP location, where service is performed at the location, or the ASP may send the product to an InFocus repair service location for service, (ii) by sending you prepaid way bills (and if you no longer have the original packaging, InFocus may send you packaging material at your cost) to

enable you to ship the product to an InFocus repair service location, or (iii) by sending you customer-installable new or refurbished replacement parts to enable you to conduct Customer Self Repair, or (iv) by exchanging the product for a new or refurbished replacement.

Customer Self Repair

InFocus products are designed with many Customer Self Repair (CSR) parts to minimize repair time and allow for greater flexibility in performing defective parts replacement. If during the diagnosis period, InFocus identifies that the repair can be accomplished by the use of a CSR part, InFocus will ship that part directly to you for replacement. There are two categories of CSR parts:

- Parts for which customer self repair is mandatory. If you request InFocus to replace these parts, you will be charged for the travel and labor costs of this service.
- Parts for which customer self repair is optional. These parts are also designed for customer self repair. If, however, you require that InFocus replace them for you, this may be done at no additional charge under the type of warranty service designated for your product.

Based on availability and where geography permits, InFocus will attempt to ship CSR parts out the next business day. Customer receipt will vary based upon the actual part, customer location and shipping method. Next Day service may be offered at an additional charge where geography permits. If assistance is required, you can call the InFocus Technical Support Center and a technician will help you over the phone. InFocus specifies in the materials shipped with a replacement CSR part whether a defective part must be returned to InFocus. In cases where it is required to return the defective part to InFocus, you must ship the defective part back to InFocus within a defined period of time, normally five (5) business days, and clearly display the Return Material Authorization (RMA#) on the outside of the shipping carton or a similar package affording an equal degree of protection. The defective part must be returned with the associated documentation in the provided shipping material. Failure to return the defective part may result in InFocus charging you for the replacement. With a Customer Self Repair, InFocus will pay all shipping and part return costs and determine the courier/carrier to be used.

Upon receipt of the replacement product or part, the original product or part becomes the property of InFocus and you agree to follow instructions, including arranging the return of original product or part to InFocus in a timely manner. When providing a product exchange or Customer Self Repair (CSR) part requiring the return of the original product or part, InFocus may require a credit card authorization as security for the retail price of the replacement product or part and applicable shipping costs. When returning product to InFocus, a Return Material Authorization Number (RMA #) is required and must be clearly displayed on the outside of the shipping carton or a similar package affording an equal degree of protection. Service options, parts availability and response times may vary according to the country in which service is requested. Service options are subject to change at any time. You may be responsible for shipping and handling charges if the product cannot be serviced in the country in which service is requested. If you seek service in a country that is not the country of original purchase, you will comply with all applicable import and export laws and regulations and be responsible for all custom duties, V.A.T. and other associated taxes and charges. Where international service is available, InFocus may repair or exchange defective products and parts with comparable products and parts that comply with local standards. In accordance with applicable law, InFocus may require that you furnish proof of purchase details and/or comply with registration requirements before receiving warranty service. Resources with more details on this and other matters on obtaining warranty service are described below.

PRIVACY. InFocus will maintain and use customer information in accordance with the InFocus Privacy Policy available at www.Infocus.com/privacy and InFocus's applicable legal obligations.

BACKUP. If your product is capable of storing software programs, data and other information, you should protect its contents against possible operational failures. Before you deliver your product for warranty service it is your responsibility to keep a separate backup copy of the contents, remove all personal information and data that you want to protect and disable any security passwords. THE CONTENTS OF YOUR PRODUCT WILL BE DELETED AND THE STORAGE MEDIA REFORMATTED IN THE COURSE OF WARRANTY SERVICE. Your product or a replacement product

will be returned to you as your product was configured when originally purchased, subject to applicable updates. InFocus may install system software updates as part of warranty service that will prevent the hardware from reverting to an earlier version of the system software. Third party applications installed on the hardware may not be compatible or work with the hardware as a result of the system software update. You will be responsible for reinstalling all other software programs, data and passwords. Recovery and reinstallation of software programs and user data are not covered under this Limited Warranty.

RESOURCES. Support and service information including Authorized Distributor and Authorized Service Provider locations is available at: www.infocus.com/support.

InFocus Corporation, 13190 SW 68th Parkway, Suite 200, Portland, OR 97223-8368 USA

© 2015 InFocus Corp. All rights reserved. InFocus and the InFocus logo are trademarks of InFocus Corp., registered in the U.S. and other countries.