ProLite TW3226AS-B3P

TOUCHSCREENS

INFORMATION

31.5” PCAP 10pt touchscreen PC with Android, PoE technology and iiSignage²

The ProLite TW3226AS-B3P is a smart and intuitive 31.5" Touch panel PC, designed for high-traffic environments such as meeting rooms, info points, or hospitality spaces. Its 10-point PCAP touch technology ensures smooth and precise interaction. Powered by Android 14, and equipped with powerful hardware, it allows easy installation of apps directly on the device - making it a all-in-one solution. Thanks to Power over Ethernet (PoE), both power and data are delivered through a single cable, simplifying installation and reducing additional cables.

With a built-in quad microphone and 5W speakers, the TW3226AS-B3P delivers seamless, modern interaction in any smart space. Additionally, it integrates effortlessly with iiSignage², iiyama’s Content Management System (CMS), giving you full control over your messages and advertising, in landscape portrait and face-up position.

Elegant Design meets Smooth Interaction

Elegant by design, vibrant in every detail and smooth response to every touch. With its slim, modern appearance and crisp, vivid colors, it creates an engaging user experience while blending naturally into a wide range of environments. Its flexible, app-ready platform also makes it easy to tailor the display to different applications, from retail and information points to showrooms, hospitality and interactive installations.

Connectivity

The RJ45 (LAN) connector supporting Power over Ethernet technology (POE) allows to provide both data connection and power by a single cable, which simplifies installation in areas where many cables would interfere with the environment.

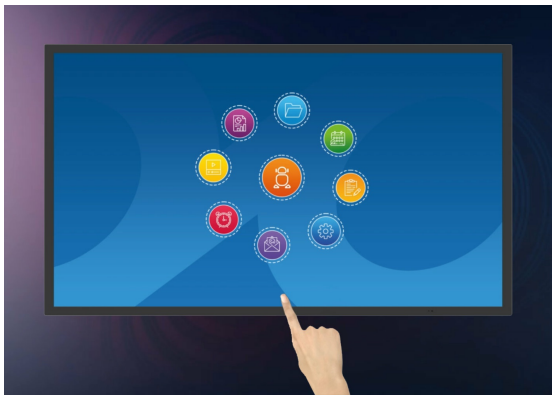

Android OS

Thanks to Android OS, you can easily customize the display to your needs by installing applications directly to it.

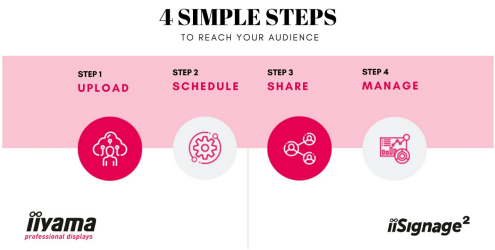

iiSignage²

iiSignage² is our digital signage content management platform to easily show and control your content and to manage your displays in a secure way. The Content Management System (CMS) gives you total control of your messaging and advertising remotely and safely.

SPECIFICATION

01 DISPLAY CHARACTERISTICS

Design	Edge to edge glass
Diagonal	31.5", 80.1cm
Panel	VA
Native resolution	1920 x 1080 (2 megapixel HD)
Aspect ratio	16:9
Panel brightness	500 cd/m²
Brightness	430 cd/m² with touch
Static contrast	4000:1 with touch
Response time (GTG)	8ms
Viewing zone	horizontal/vertical: 178°/178°, right/left: 89°/89°, up/down: 89°/89°
Colour support	16.7mln 8bit
Viewable area W x H	698.4 x 392.8mm, 27.4 x 15,4"
Pixel pitch	0.3637mm
Bezel colour and finish	black, matte

02 TOUCH

Touch technology	projective capacitive
Touch points	10 (HID, only supported by integrated OS, external OS only support single touch)
Touch method	finger, glove (latex), capacitive stylus
Touch interface	USB
Supported operating systems	All iiyama monitors are Plug & Play and compatible with Windows and Linux. For details regarding the supported OS for the touch models, please refer to the driver instruction file available in the downloads section.

03 INTERFACES / CONNECTORS / CONTROLS

Digital signal input	HDMI x1 (HDMI, 1920x1080 @60Hz)
Audio output	Speakers 2 x 5W
HDCP	yes
USB ports	x3 (1x v. 3.2 (Gen 1, 5Gbit; DC5V, 900mA), 1x 2.0 (DC5V, 500mA), 1x USB-C (DC5V, 900mA (video output only, touch board function))
RJ45 (LAN)	x1 (PoE - IEEE802.3bt/85W)
Microphone	x1 (Standard Quad Microphone)

04 FEATURES

Integrated software	Android 14
CPU	Rockchip RK3576 Octa-core A72*4 + A53*4 up to 2.2GHz
GPU	ARM-G52 MC3

Storage	32GB eMMC
Memory	4GB LPDDR4X
WiFi	IEEE802.11ax/ac/a/b/g/n
Bluetooth	5.3
Extra	Auto-rotation, anti-glare coating, PoE
Kiosk mode	yes
Max. non-stop operating time	24/7
Glass hardness	3H

05 GENERAL

Control buttons	Power switch, volume/ button +, volume/ button -
Applications	Applications: lock application, manage restart time, manage power on/off time, calculator, calendar, Chrome, alarm/clock/timer/stopwatch, manage files & folders, organize albums, Gmail, Google, iiSignage², play audio files, Play store, system peferences, sound recorder, play video
Flicker free	yes

06 MECHANICAL

Orientation	landscape, portrait, face-up
VESA mounting	100 x 100mm
Cable management system	yes
MTBF	50000 hours

07 ACCESSORIES INCLUDED

Cables	power
Guides	quick start guide, safety guide
Other	AC adapter, wall mount (cover, cover screws, plugs) + screws, eva pads, spirit level
Cable cover	yes

08 POWER MANAGEMENT

Power supply unit	external
Power supply	DC 12 V
Power usage	36.34W typical, 0.5W stand by, 0.3W off mode

09 SUSTAINABILITY

Regulations	CE, EAC, RoHS support, ErP, WEEE, REACH, UKCA
REACH SVHC	above 0.1%: Lead

10 DIMENSIONS / WEIGHT

Product dimensions W x H x D	735 x 436 x 35mm
Box dimensions W x H x D	833 x 508 x 126mm
Weight (without box)	7.7kg
Weight (with box)	12.4kg
EAN code	4948570125708

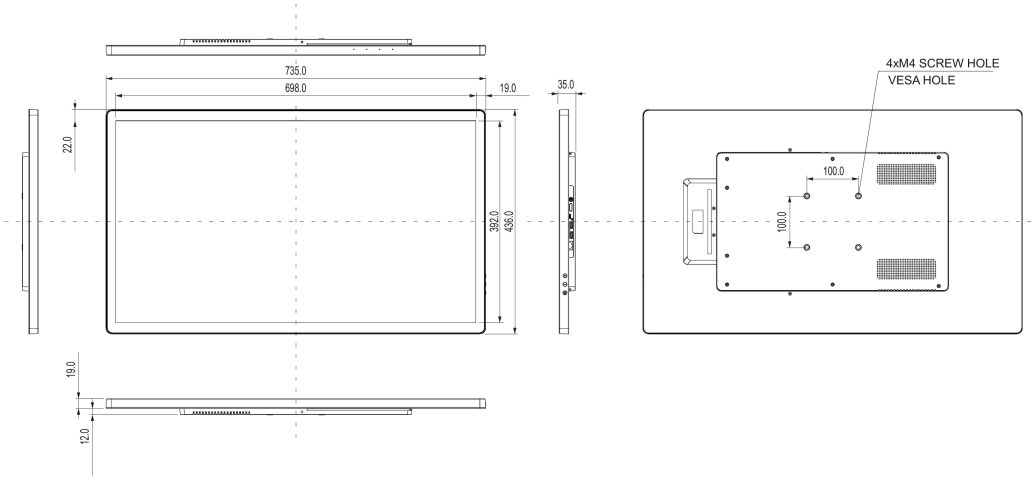

GALLERY

All trademarks and registered trademarks acknowledged. E & O E. Specification subject to change without notice. All LCD's comply with ISO-9241-307:2008 in connection with pixel defects. **© IIYAMA CORPORATION. ALL RIGHTS RESERVED**