23.8" Full HD In-cell PCAP 10pt interactive Touch Panel PC with Android OS, IPS panel technology and anti glare coating

The ProLite TW2424AS-B1 interactive Touchpanel-PC is a perfect choice for high-use environments. The IPS panel, integrated in a slim and elegant bezel, delivers both excellent colour performance with wide viewing angles and noticeably sharper images. The In-cell 10tp PCAP touch technology ensures a fluid and natural touch experience. This monitor can operate in landscape, portrait and face-up orientation in 24/7 operating time. Thanks to the pre-installed Android 12 operating system, it is possible to easily customize the monitor by installing applications directly to it. In combination with the 32GB storage, Wi-Fi connection, LAN (RJ45) and Bluetooth connectors, it makes the monitor especially suited for POS systems or information points in retail shops to educate customers about your products, as well as virtually limitless smart home applications.

Available also in white : ProLite TW2424AS-W1 and in white : ProLite TW2424AS-W3P

Android OS

Thanks to Android OS, you can easily customize the display to your needs by installing applications directly to it.

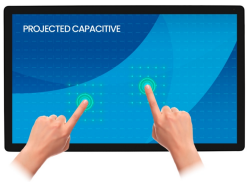

Touch technology - Capacitive

This technology uses a sensor-grid of micro-fine wires integrated into the glass that covers the screen. Touch is detected because electrical characteristics of the sensor grid change when human finger is placed on the glass. Thanks to the glass overlay this technology is highly durable, and the touch function remains unaffected even if the glass is scratched. It offers perfect picture performance and will work with human finger (also latex gloved) and stylus-pen.

01 DISPLAY CHARACTERISTICS

Design	Thin bezel
Diagonal	23.8", 60.5cm
Panel	IPS
Native resolution	1920 x 1080 (2 megapixel HD)
Aspect ratio	16:9
Brightness	250 cd/m² with touch
Static contrast	1000:1 with touch
Response time (GTG)	14ms
Viewing zone	horizontal/vertical: 178°/178°, right/left: 89°/89°, up/down: 89°/89°
Colour support	16.7mln
Horizontal Sync	31 - 83.kHz
Viewable area W x H	527 x 296.5mm, 20.7 x 10.6"
Pixel pitch	0.275mm
Bezel colour and finish	black, matte

02 TOUCH

Touch technology	InCell PCAP
Touch points	10 (HID, only supported by integrated OS, external OS only support single touch)
Touch method	finger, glove (latex), capacitive stylus
Touch interface	USB

03 INTERFACES / CONNECTORS / CONTROLS

Digital signal input	HDMI x1 (1920x1080 @60Hz)
Audio input	Mini jack x1
Digital signal output	USB-C x1 (DC5V, 900mA)
Audio output	Mini jack x1 Speakers 2 x 5W
HDCP	yes
RJ45 (LAN)	x1
USB HUB	x3 (2x 2.0 (DC5V, 500mA), 1x v. 3.2 (Gen 1, 5Gbit; DC5V, 900mA)
Microphone	x1

04 FEATURES

Integrated software	Android 12 with GMS
CPU	Rockchip RK3399 Hexa-core A72*2 + A53*4
GPU	T860 MP4
Storage	32Gb eMMC
Memory	4Gb LPDDR4
WiFi	IEEE802.11a/b/g/n/ac
Bluetooth	5.2
Extra	auto-rotation, 2x5W speakers, microphone, anti-glare coating
Max. non-stop operating time	24/7
Anti image retention	yes

Glass hardness	6H
OSD key lock	yes

05 GENERAL

Control buttons	Volume +, volume -, power switch
Applications	Lock applications, manage restart time, manage power on/off, calculator, calender, Chrome, alarm/ clock, Timer, Stopwatch, Manage files, orginize albums, Gmail, play audio files, Play Store, search engine, system preferences, sound recorder, play videos
Flicker free	yes

06 MECHANICAL

Orientation	landscape, portrait, face-up
VESA mounting	100 x 100mm
MTBF	50000 hours (excluding backlight)

07 ACCESSORIES INCLUDED

Cables	power
Guides	quick start guide, safety guide
Other	AC adapter
Cable cover	yes

08 POWER MANAGEMENT

Power supply unit	external
Power supply	DC 12 V
Power usage	19W typical, 0.5W stand by, 0.3W off mode

09 SUSTAINABILITY

Regulations	CE, EAC, RoHS support, ErP, WEEE, REACH, UKCA
REACH SVHC	above 0.1%: Lead

10 DIMENSIONS / WEIGHT

Product dimensions W x H x D	549.5 x 336 x 28mm
Box dimensions W x H x D	580 x 375 x 126mm
Weight (without box)	4.23kg
Weight (with box)	6.15kg
EAN code	4948570122943

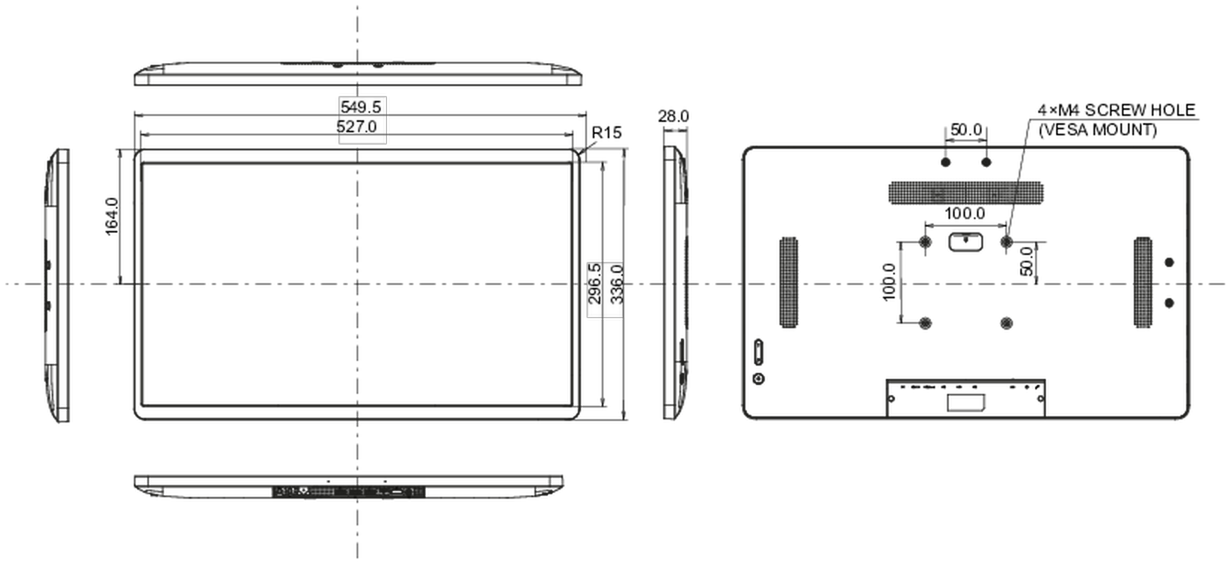

All trademarks and registered trademarks acknowledged. E & O E. Specification subject to change without notice. All LCD's comply with ISO-9241-307:2008 in connection with pixel defects.

© IIYAMA CORPORATION. ALL RIGHTS RESERVED