ASSEMBLY INSTRUCTIONS, ELO SELF SERVICE STAND

E421137 ELO-STAND-SELF-SERVICE-15-22-COUNTERTOP4

Contents for Kit: E421137, ELO-STAND-SELF-SERVICE-15-22-COUNTERTOP4

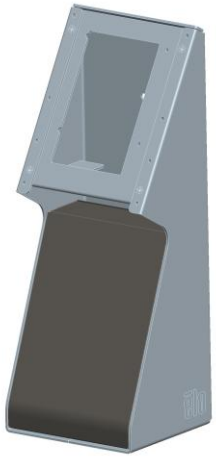

Head Assembly
Qty. 1

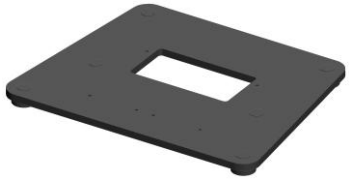

Countertop Base
Qty. 1

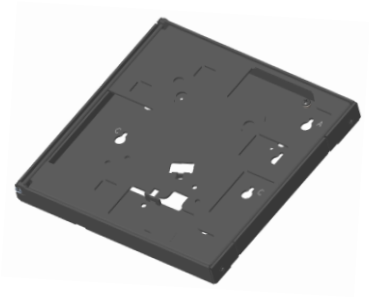

Display Bracket,
Android
Qty. 1

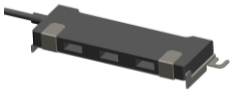

USB Hub
Qty. 1

Display Bracket,
Windows
Qty. 1

Tie-wrap
Qty. 3

Hardware		
Bag **A**	Qty.10	SCREW, M4X8, PAN-HEAD, CROSS-RECESS
Bag **B**	Qty.4	SCREW, M4X8, FLAT-HEAD, CROSS-RECESS
Bag **C**	Qty.3	SCREW, M3X8, PAN-HEAD, CROSS-RECESS,
Bag **D**	Qty.4	SCREW, 3mm X8L, THREAD-FORMING, PAN-HEAD
Bag **L**	Qty.4	SCREW, M4X6, PAN-HEAD, CROSS-RECESS
Bag **M**	Qty.4	SCREW, M4X18, PAN-HEAD, CROSS-RECESS
Bag **N**	Qty.4	SCREW, M4X12, PAN-HEAD, CROSS-RECESS
Bag **S**	Qty.3	SCREW, M4X5, PAN-HEAD, CROSS-RECESS
Bag **U**	Qty.1	DOUBLE-SIDED FOAM TAPE
Bag **Y**	Qty.2	SCREW_M3X8_SPECIAL PAN-HEAD, CROSS-RECESS, ZINC PLATE OR SS

Grounding solution hardware		
Bag **Grounding**	Qty.1	E488214_CAB-GND-EU-1.0m-GYWallabyPro
	Qty.1	SCREW, M4X6, PAN-HEAD WITH WASHER, GROUNDING

Panel Hardware	
Qty.2	SCREW, M6X14, PAN-HEAD, CROSS-RECESS
Qty.2	BACKER BOARD SPACER
Qty.2	THUMB SCREW

© Copyright 2021 Elo Touch Solutions, Inc.

1

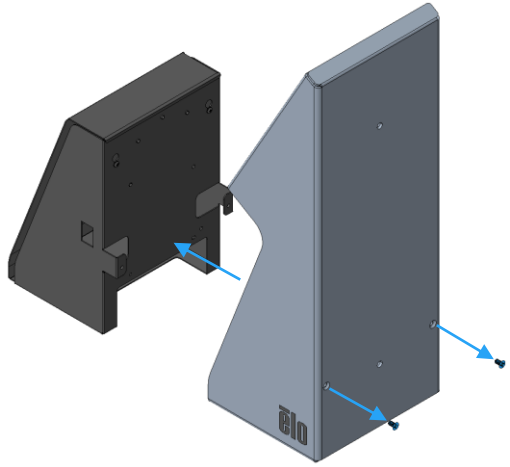

Remove and save (2) screws on rear of Head, pull out printer tray.

2

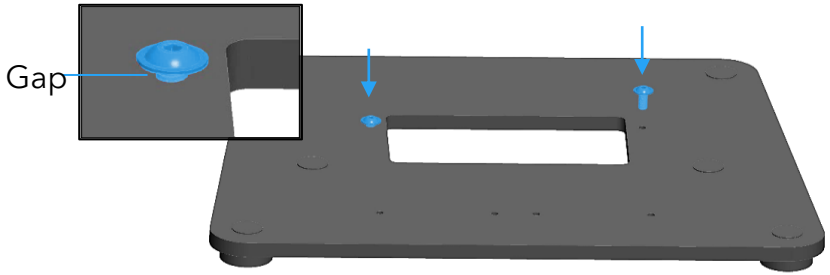

Add (2) screws from bag “A”; leave ~3mm (1/8”) gap for Head.

3

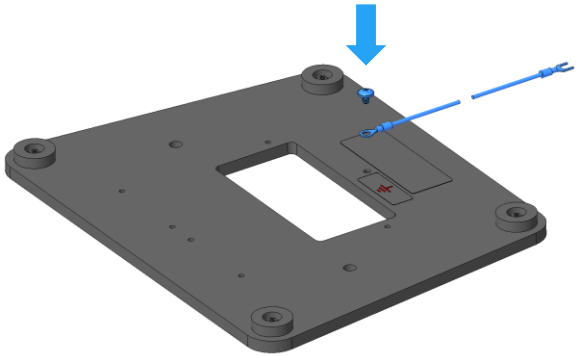

Attach GND cable to countertop plate using (1) screw and GND cable from bag “Grounding”.

4

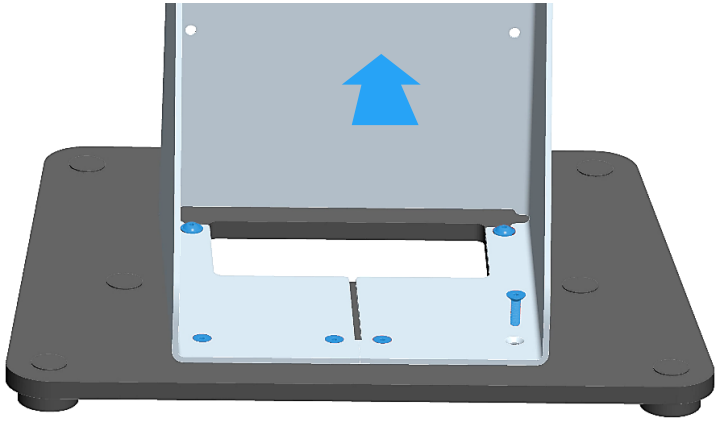

- Align slots on bottom rear of Head with (2) screws on base and slide on stand.
- Add (4) screws from bag “B”.
- Tighten (2) previous screws at rear.

© Copyright 2021 Elo Touch Solutions, Inc.

5

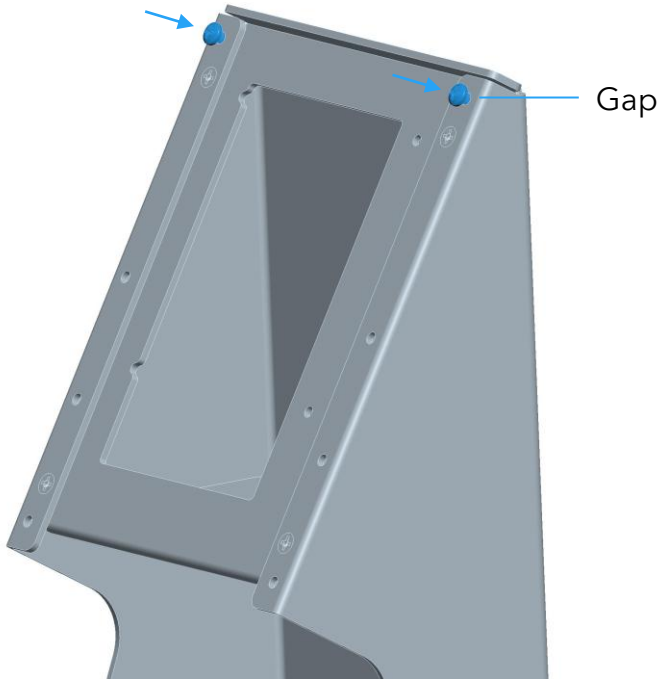

Add (2) screws from bag “A”; leave ~3mm (1/8”) gap (for Display Bracket).

6

Choose Android or Windows Display Bracket
For 15” or 22” monitor, use Android Display Bracket

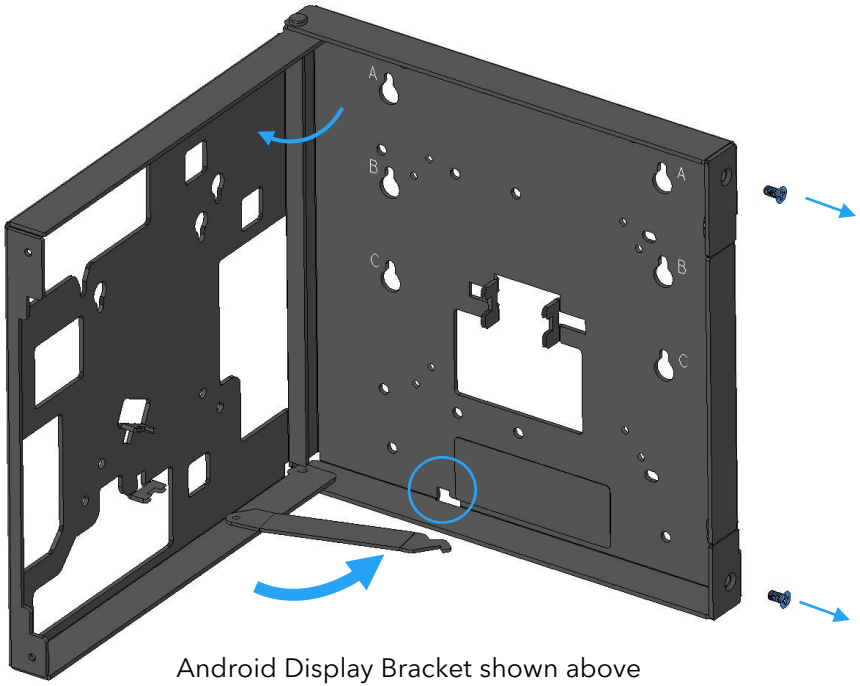

Android Display Bracket shown above

Remove and save (2) screws, open cover of Display Bracket; pivot out and fix prop.

© Copyright 2021 Elo Touch Solutions, Inc.

7

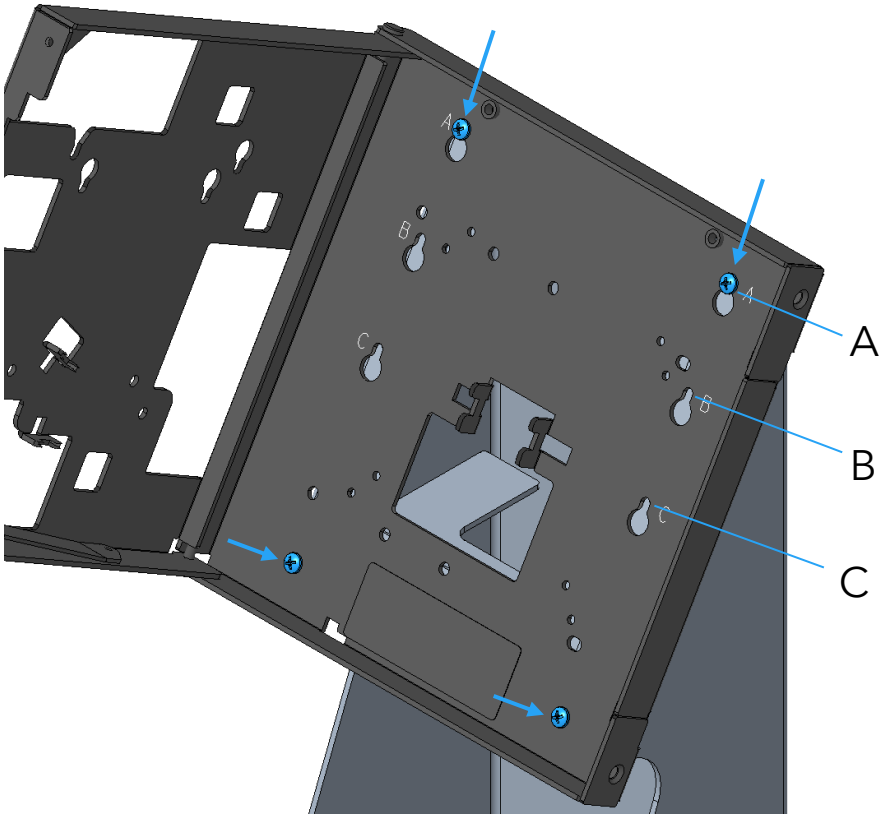

- Assemble Display Bracket onto Head.
- Position “A” for 15”, 22” in landscape.
- Position “B” for 15” in portrait
- Position “C” for 22” in portrait
- Add (2) screws from bag “A” at bottom holes.

For Android Slate, skip to step **8**

8

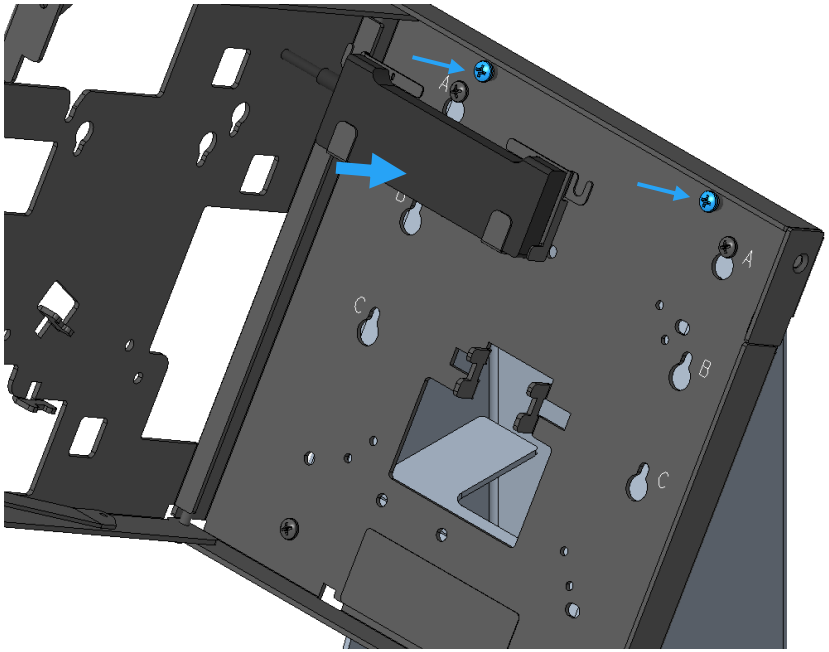

- Assemble USB Hub.
- Add (2) screws from bag “S”; leave ~3mm (1/8”) gap for USB bracket to slide on; tighten screws.

For Android, skip to step **13**
For Windows, skip to step **18**

© Copyright 2021 Elo Touch Solutions, Inc.

9

Android Slate: Landscape
(For Portrait, skip to step 10)

Note: EMV Cradles are not compatible with Android Slate in landscape orientation.

Top Landscape

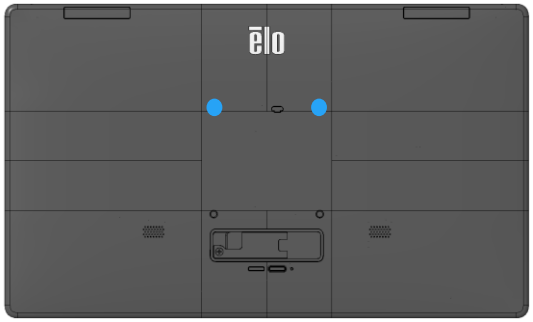

Add (2) screws from bag "L" to top 75mm VESA positions. Leave ~3mm (1/8") gap for mounting to display bracket. Connect Slate Hub to Slate and attach cable cover before proceeding.

10

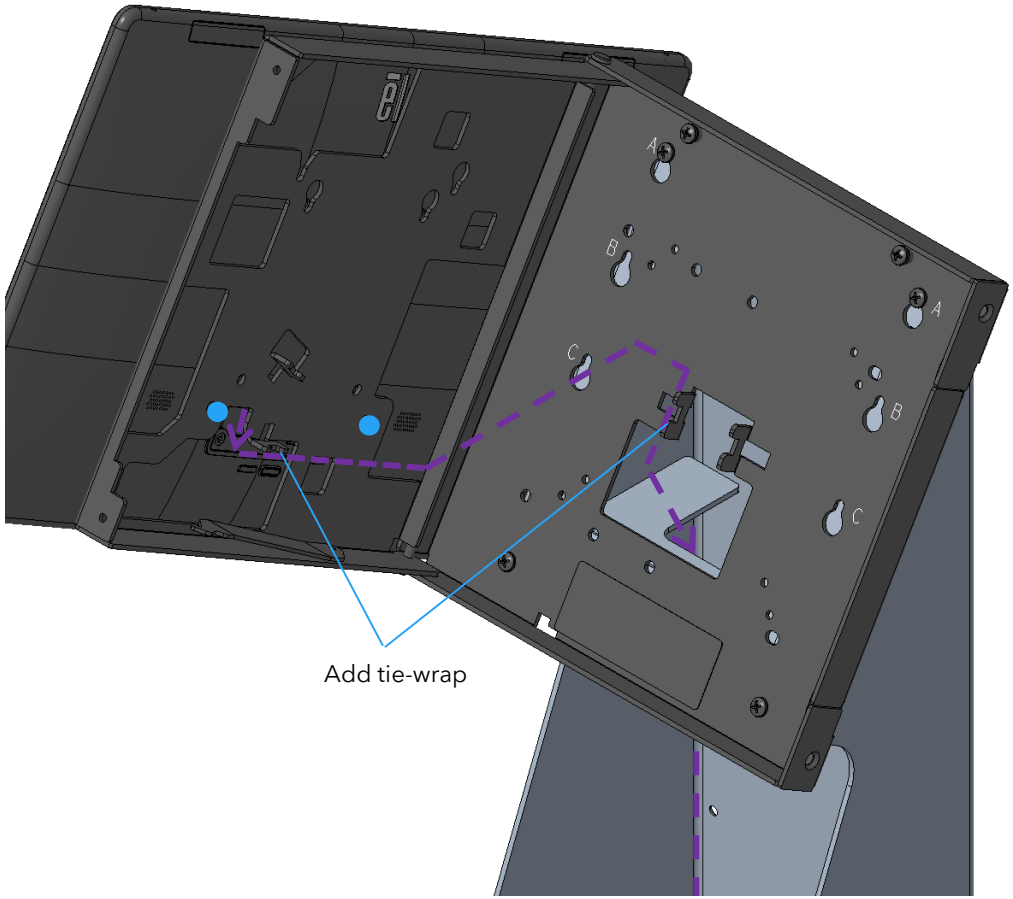

- Route **Slate Hub** through display bracket and head.
- Mount Slate, add (2) screws from bag "L" to bottom 75mm VESA positions. Add tie-wrap as shown.
- Tighten VESA screws to 12 in-lb (1.4 N-m).

Skip to step **12**

© Copyright 2021 Elo Touch Solutions, Inc.

11

Android Slate: Portrait

If using an EMV Cradle, follow those instructions before proceeding.

Top Portrait

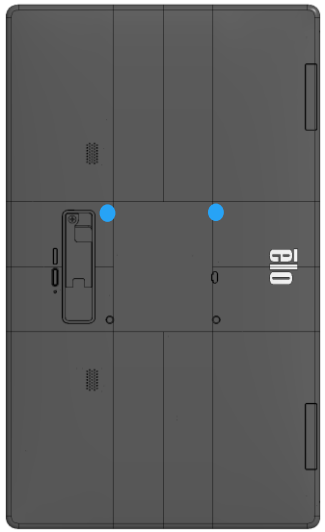

Add (2) screws from bag “L” to top 75mm VESA positions. Leave ~3mm (1/8”) gap for mounting to display bracket. Attach Slate Hub and cable cover before mounting displays on stand.

12

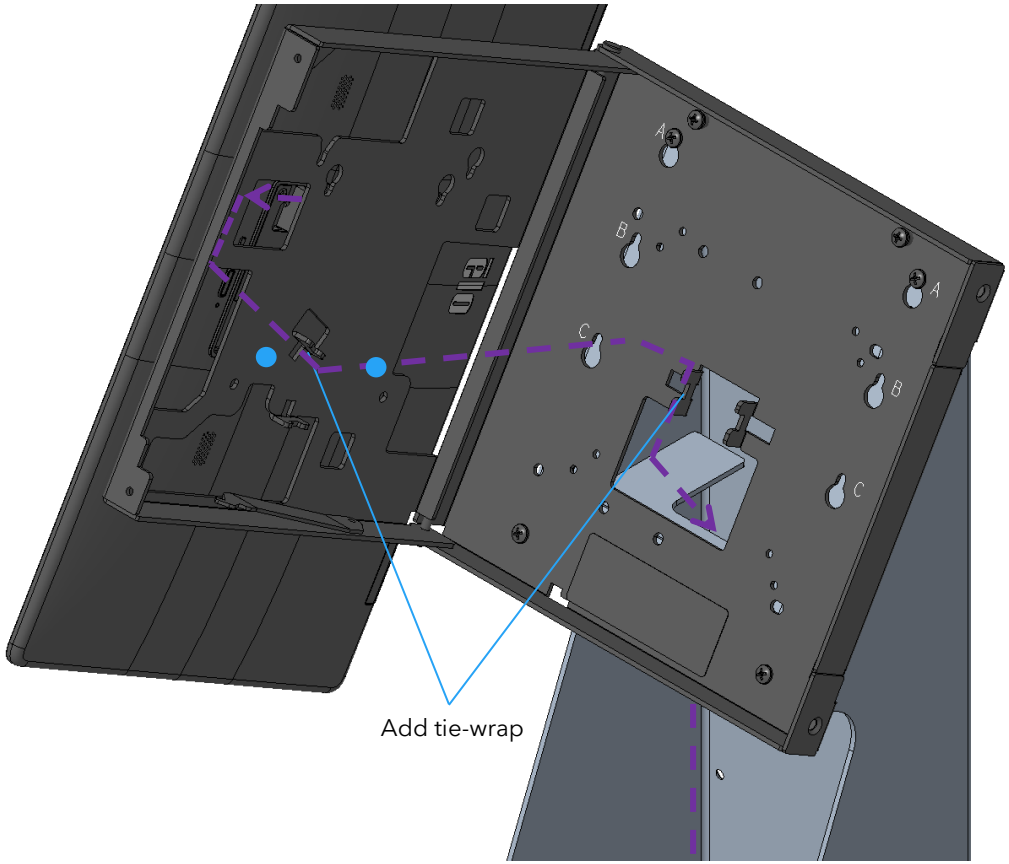

- Route **Slate Hub** through display bracket and head.
- Mount Slate, add (2) screws from bag “L” to bottom 75mm VESA positions. Add tie-wrap as shown.
- Tighten VESA screws to 12 in-lb (1.4 N-m).

© Copyright 2021 Elo Touch Solutions, Inc.

13

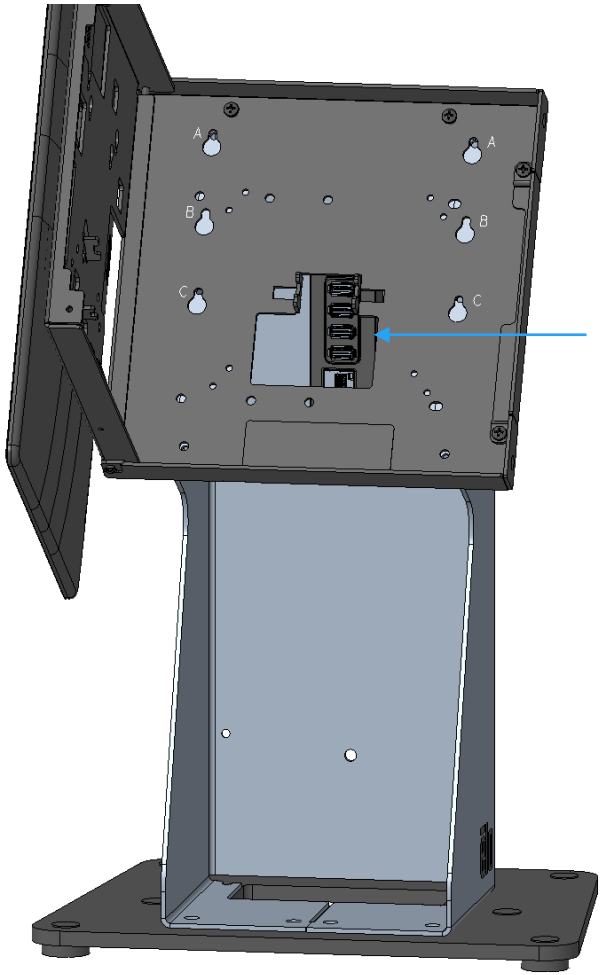

Apply double-sided foam tape from bag “U” to back of Slate Hub and attach to back of head approximately where shown. Route LAN cable through base. Connect LAN and power supply to Slate Hub.

Skip to step **25**

© Copyright 2021 Elo Touch Solutions, Inc.

14

Android: Landscape
(For Portrait, skip to step **15**)

If using an EMV Cradle, follow those instructions before proceeding.

Top Landscape

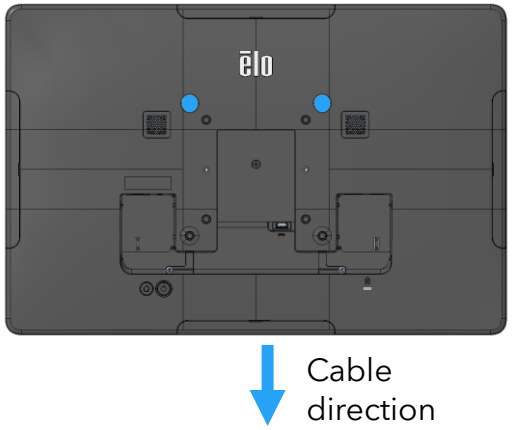

Add (2) screws from bag "L" to top 100mm VESA positions. Leave ~3mm (1/8") gap for mounting to display bracket. Remove cable cover(s) before mounting displays on stand.

15

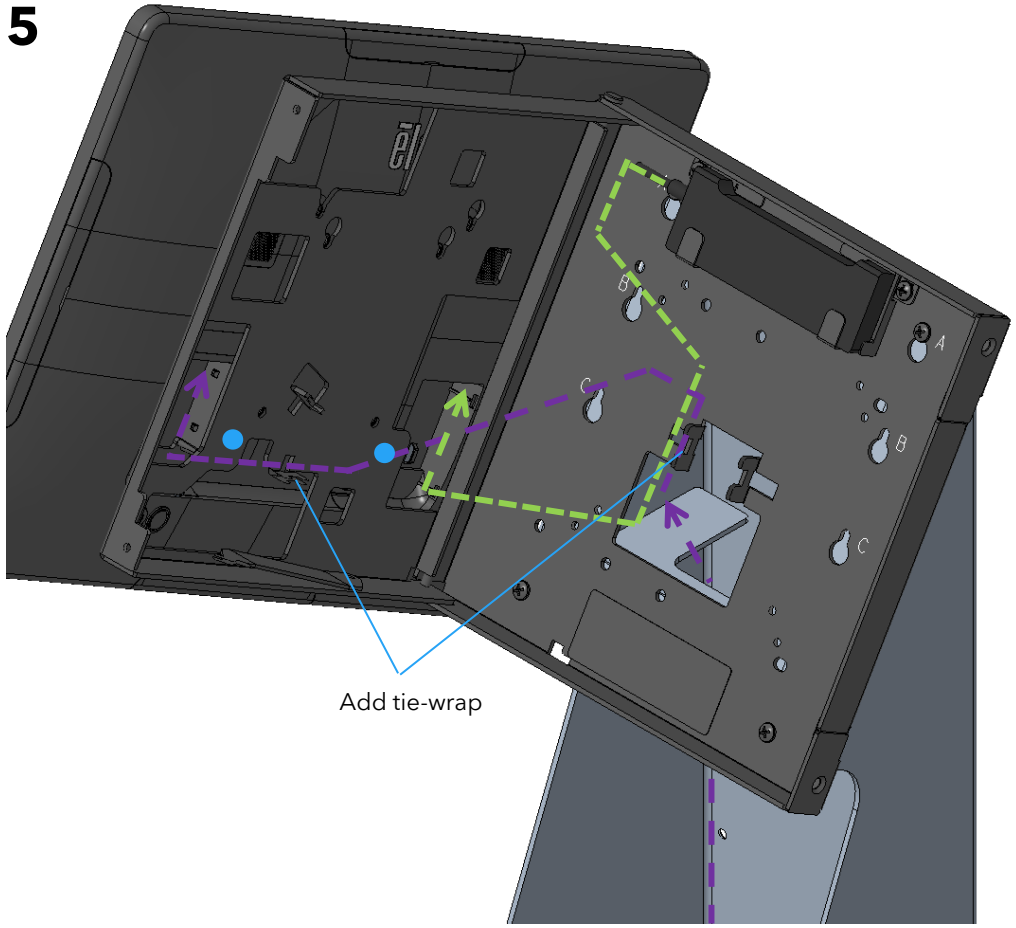

- Mount I-Series, add (2) screws from bag "L" to bottom 100mm VESA positions.
- Route **power**, **LAN cables** through bottom of stand head. Route **USB Hub** cable or other **USB** if used.
- Tighten VESA screws to 12 in-lb (1.4 N-m).

Skip to step **28**

© Copyright 2021 Elo Touch Solutions, Inc.

16

Android: Portrait

If using an EMV Cradle, follow those instructions before proceeding.

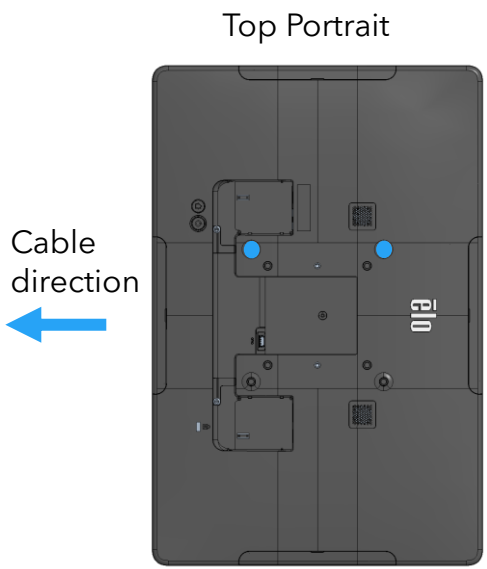

Add (2) screws from bag "L" to top VESA positions. Leave ~3mm (1/8") gap for mounting to display bracket. Remove cable cover(s) before mounting displays on stand.

17

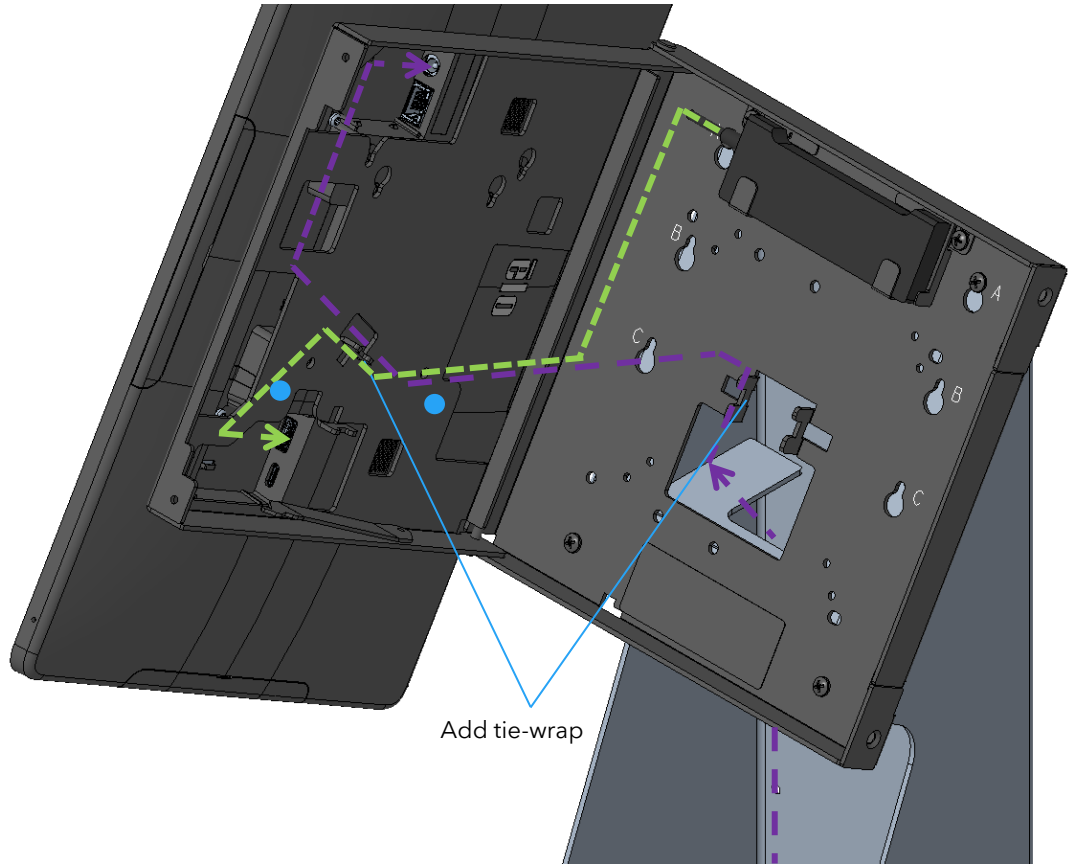

- Mount i-Series, add (2) screws from bag "L" to bottom VESA positions.
- Route **power**, **LAN cables** through bottom of stand head. Route **USB Hub** cable or other **USB** if used.

Skip to step **25**

© Copyright 2021 Elo Touch Solutions, Inc.

18

Windows: Landscape
(For Portrait, skip to step **19**)

If using an EMV Cradle, follow those instructions before proceeding.

15″ Landscape

22″ Landscape

15″: add (2) screws from bag “M” to top 75mm VESA positions.
22″: add (2) screws from bag “N” to top 75mm VESA positions.

Leave ~3mm (1/8″) gap for mounting to display bracket.

19

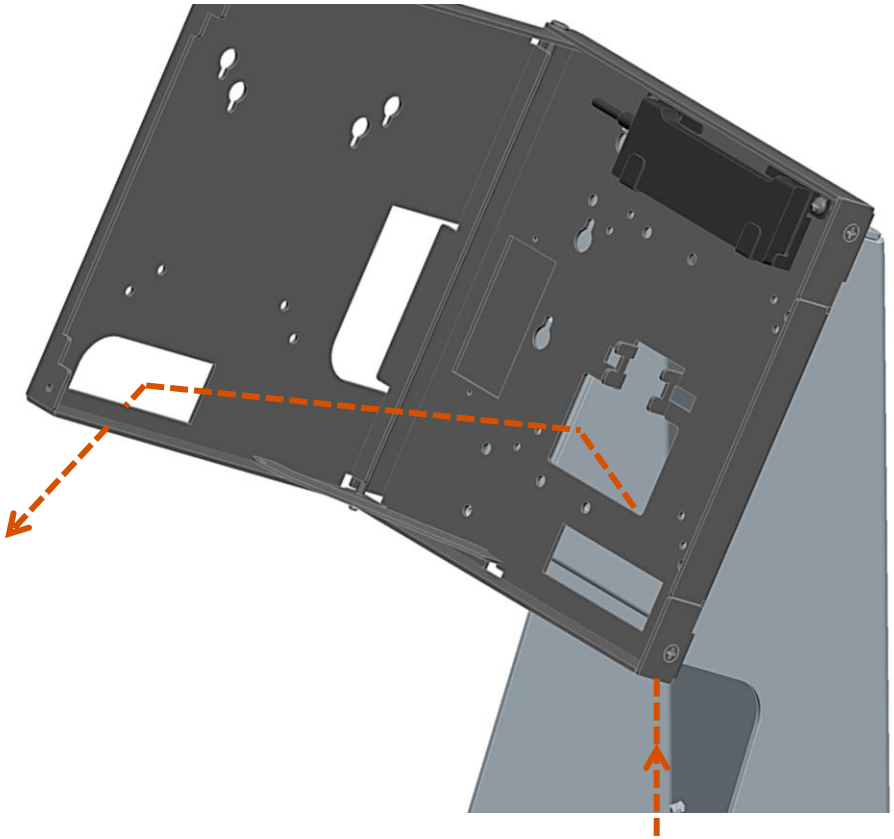

Route **power cable** from I-Series through bottom of stand, through openings in the mount bracket as shown.

© Copyright 2021 Elo Touch Solutions, Inc.

20

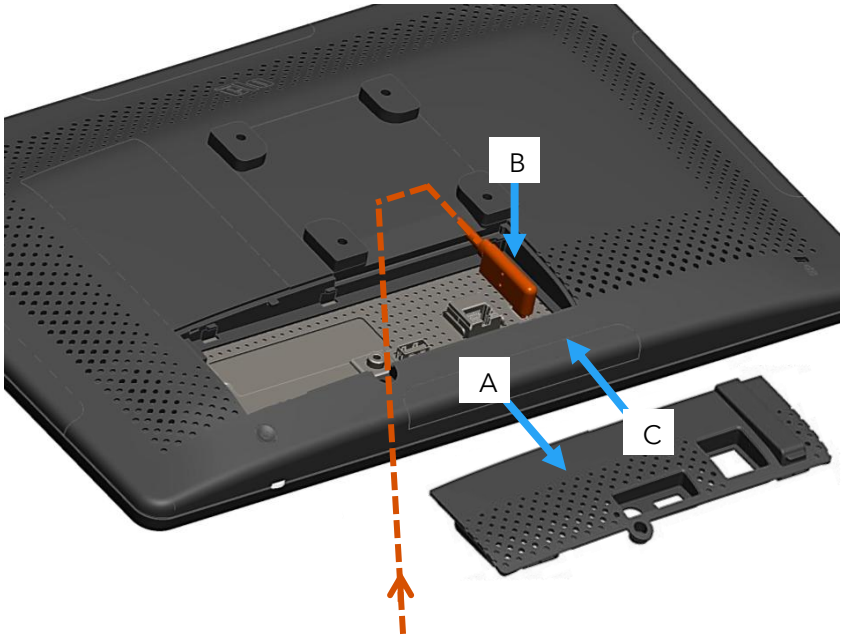

Place I-Series on surface near stand head, within reach of cable. Remove cable door (A), plug in power cable (B) and replace cable door (C) as shown.

21

Mount I-Series, then add bottom VESA screws:

Add (2) screws from bag "M" (15") or bag "N" (22") to bottom 75mm VESA positions.

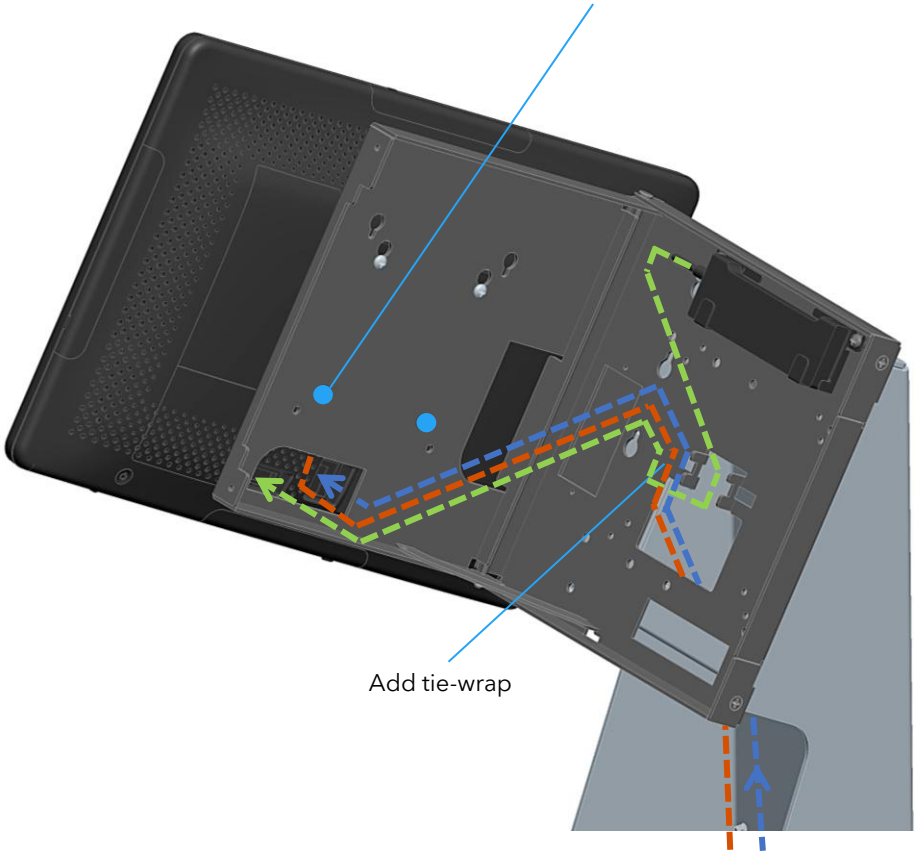

Route, **LAN cable** through bottom of stand head. Route **USB Hub** cable or other **USB** if used.

Skip to step **25**

© Copyright 2021 Elo Touch Solutions, Inc.

22

Windows Portrait

If using an EMV Cradle, follow those instructions before proceeding.

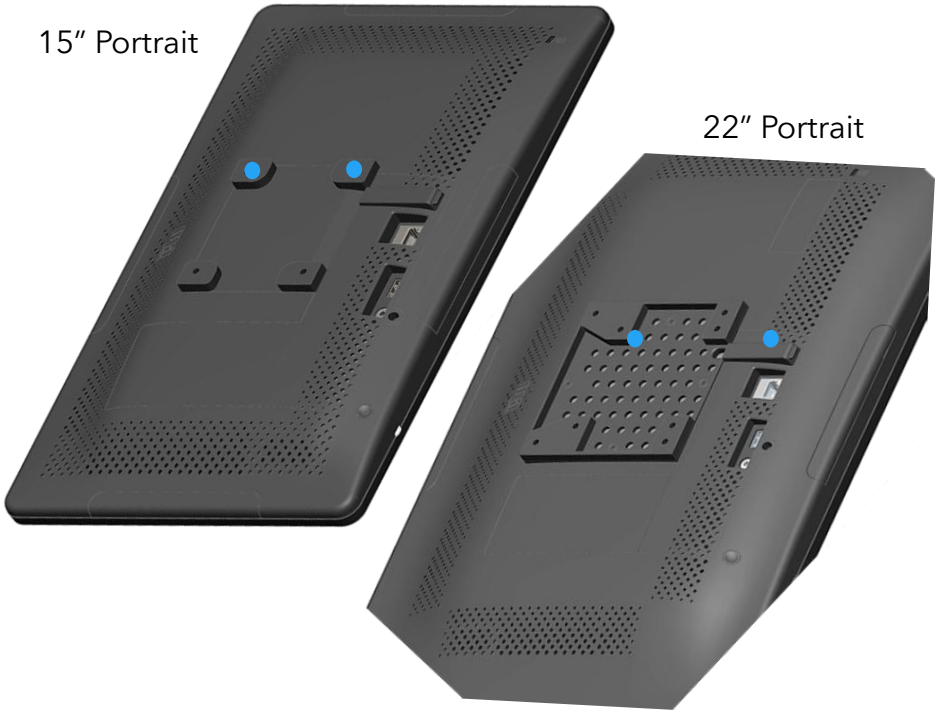

15": add (2) screws from bag "M" to top 75mm VESA positions.
22": add (2) screws from bag "N" to top 100mm VESA positions.

Leave ~3mm (1/8") gap for mounting to display bracket.

23

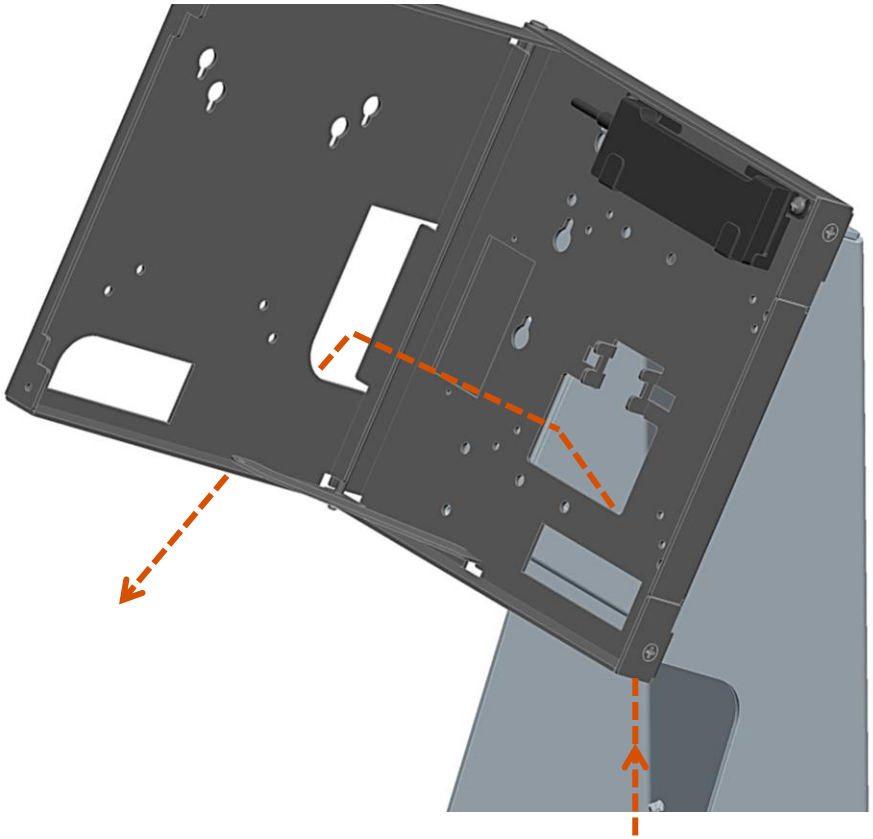

Route **power cable** from I-series through bottom of stand, through openings in the mount bracket as shown.

© Copyright 2021 Elo Touch Solutions, Inc.

24

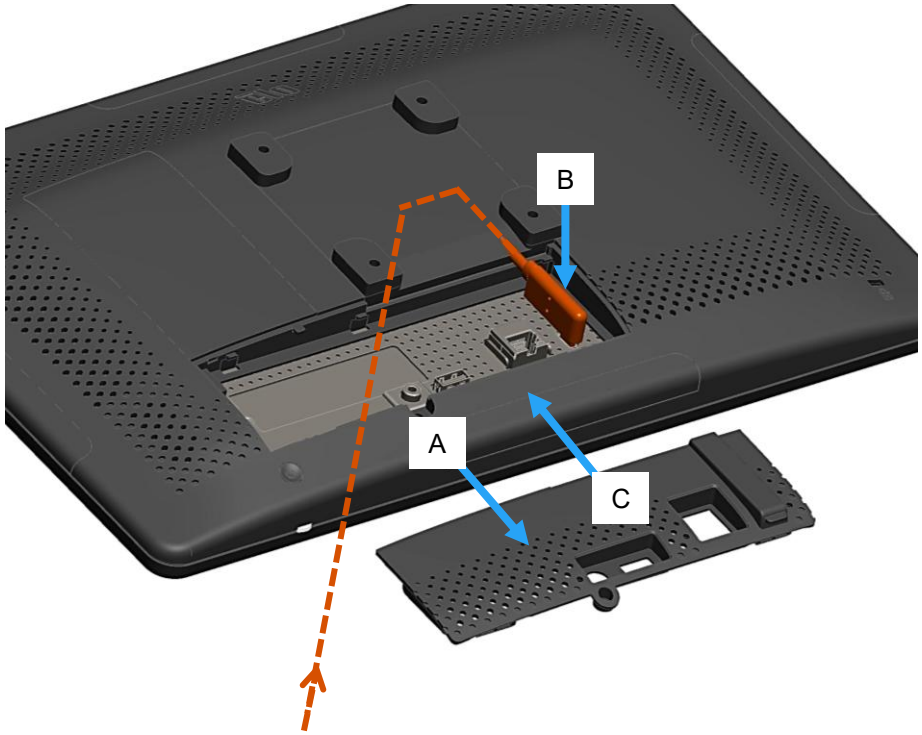

Place I-Series on surface near stand head, within reach of cable. Remove cable door (A), plug in power cable (B) and replace cable door (C) as shown.

25

Mount I-Series, then add bottom VESA screws:

15": add (2) screws from bag "M" to bottom 75mm VESA positions.
22": add (2) screws from bag "N" to bottom 100mm VESA positions.

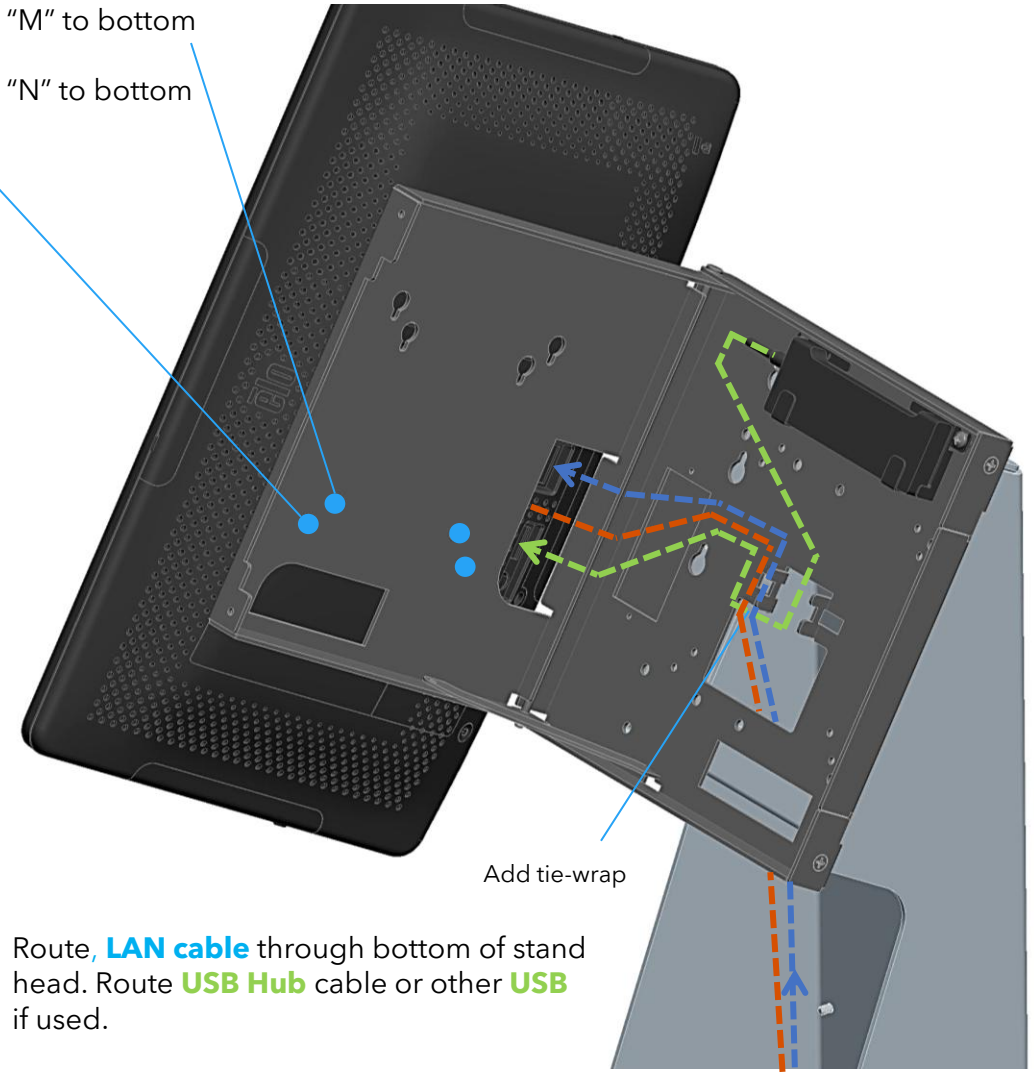

Route, **LAN cable** through bottom of stand head. Route **USB Hub** cable or other **USB** if used.

© Copyright 2021 Elo Touch Solutions, Inc.

26

If no printer, skip to step **30.**

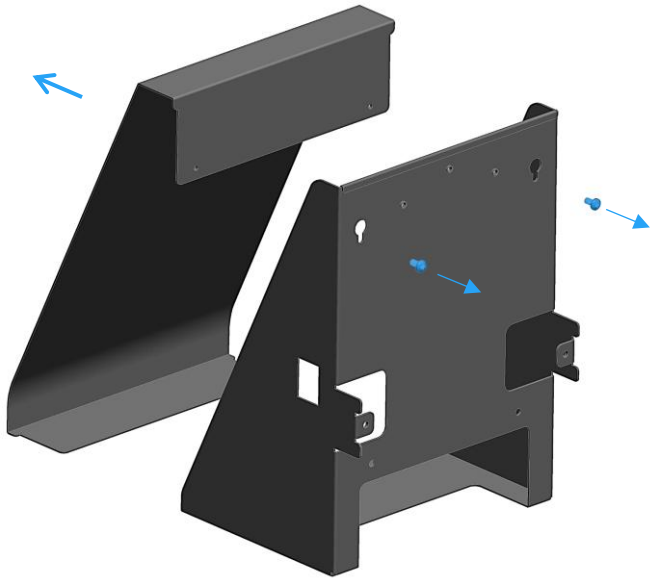

If using printer, remove cover to add printer.

Continue to step **26** for **Star** printers
For **Epson TM-T88, Bixolon SRP350 ,** skip to step **29** and printers .

27

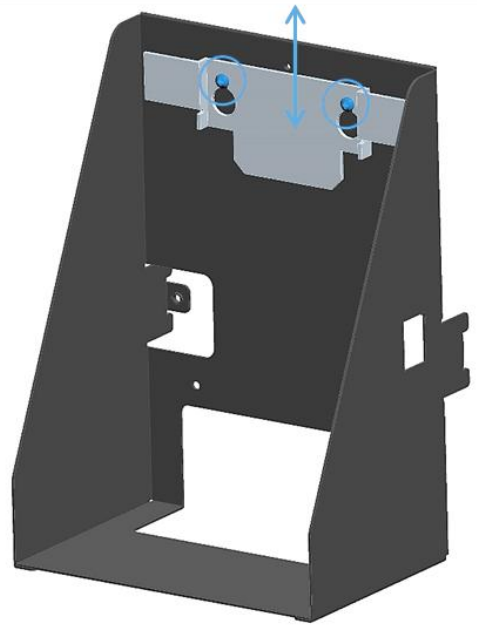

Add (2) screws from bag "C" to printer tray; use Star printer bracket to set depth of screws than remove Star bracket.

© Copyright 2021 Elo Touch Solutions, Inc.

28 Add Star printer bracket to printer; refer to Star instructions.

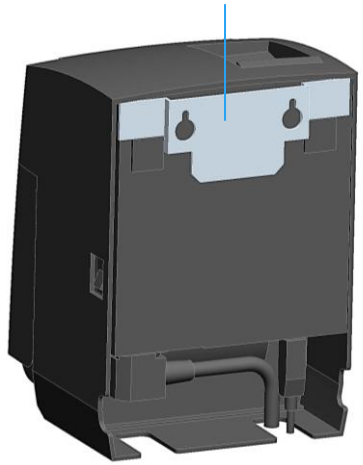

29 Add Star printer with bracket to printer tray. Secure printer to printer tray using third screw from bag "C".

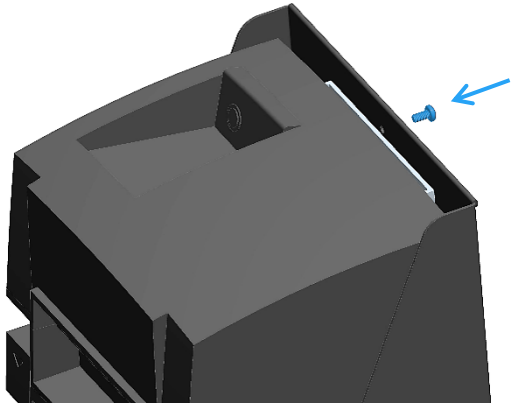

Skip to step **30**

30 Add (4) screws from bag "D" to attach printer to the tray.

Epson TM-T88

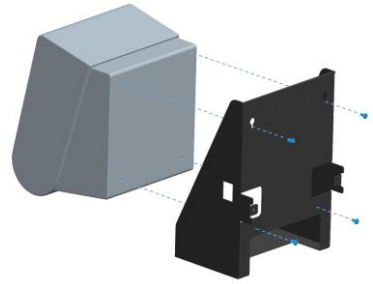

SRP-350plusIII

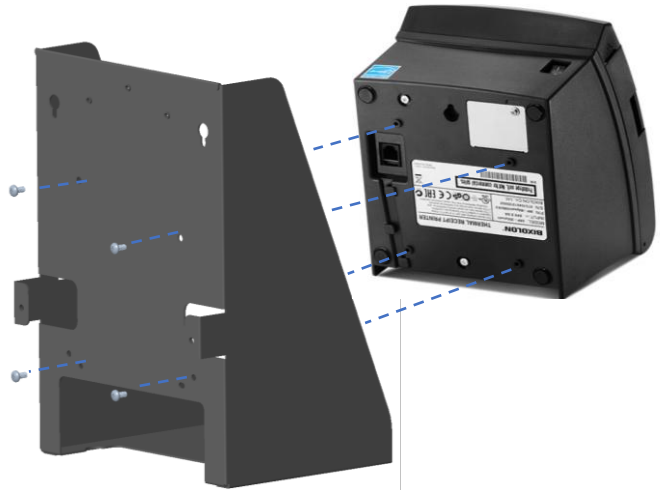

© Copyright 2021 Elo Touch Solutions, Inc.

31 Add Star printer bracket to printer; refer to Star instructions.

TPS100IV Printer

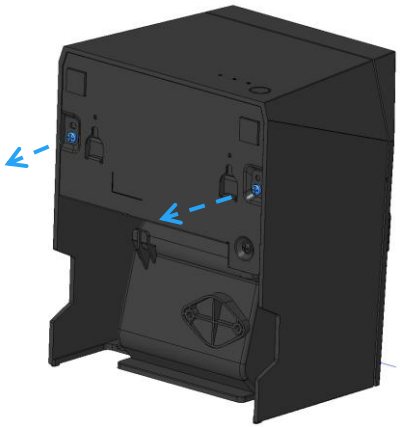

Remove the M3 Screw from TPS100IV Printer

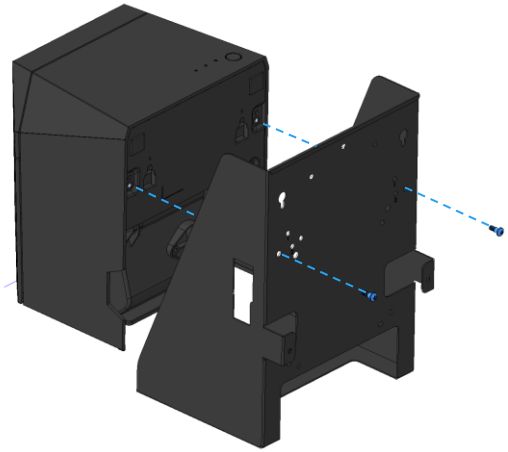

Install (2) the screws from bag "Y" to attach printer to the tray.

© Copyright 2021 Elo Touch Solutions, Inc.

32

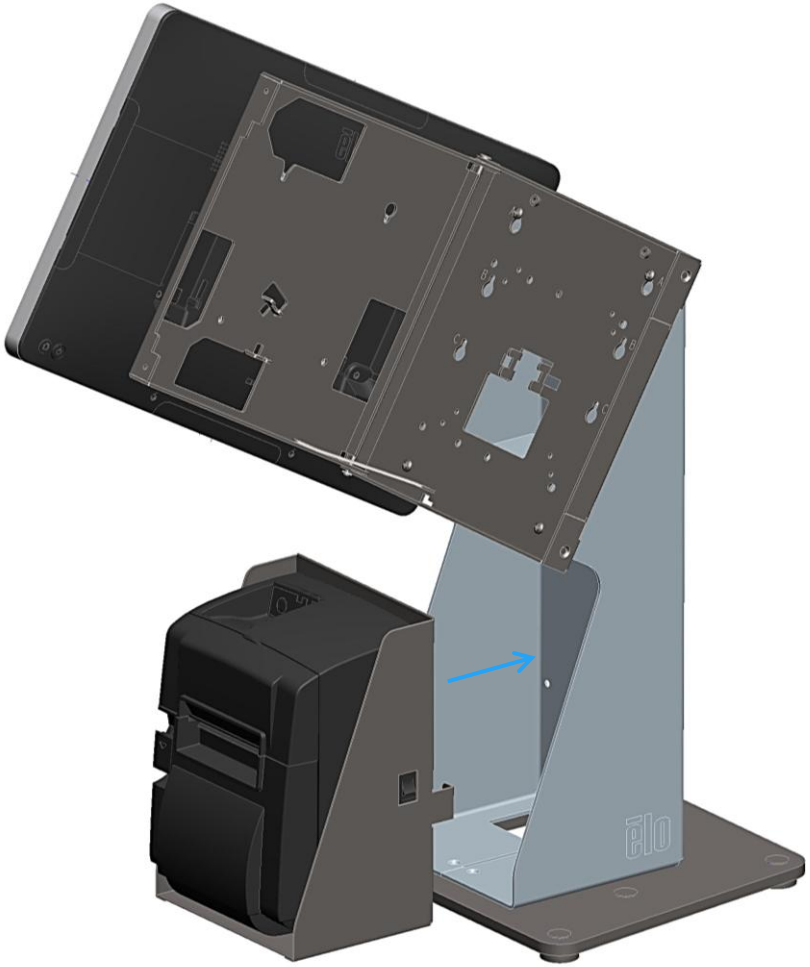

Route cables from/to printer as needed, slide in printer tray assembly (or printer tray with cover if no printer).

33

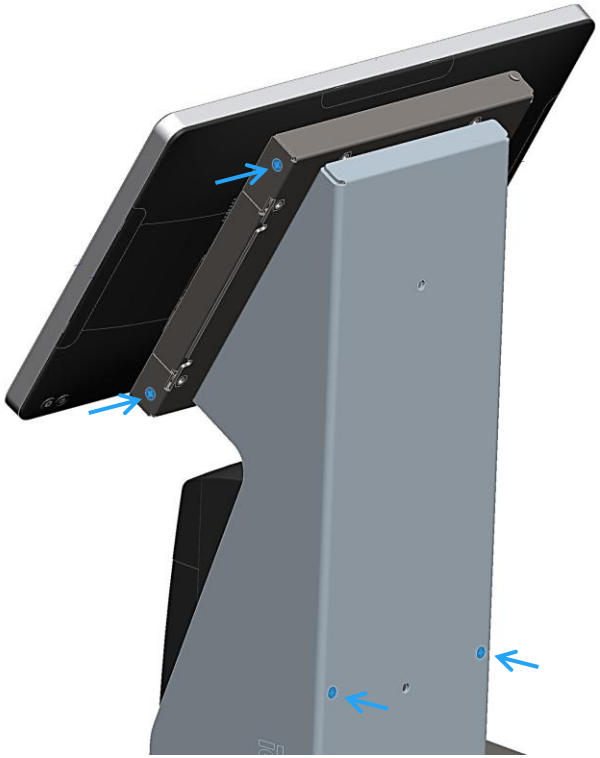

- Close Display Bracket and add (2) screws saved from step 7.
- Secure printer assembly with (2) screws saved from step 3.

© Copyright 2021 Elo Touch Solutions, Inc.

34

If installing an EMV Cradle with display in landscape orientation, finish by adding (1) screw from bag “S”.

- KIT-EMV-ING-IPP320/350/315-4
- KIT-EMV-VF-MX915/M400-ING-ISC250-SQ-4
- KIT-EMV-ING-LANE3000-4
- EMV-SELF-SERV-VF-MX925
- EMV-SELF-SERV-VF-P400

EMV-SELF-SERV-ING-RP757

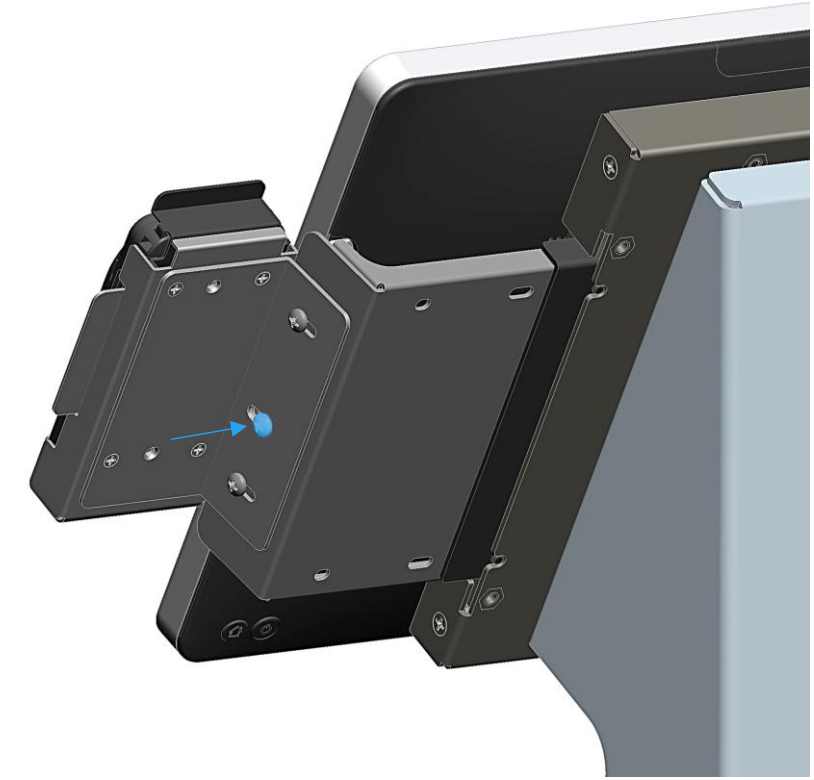

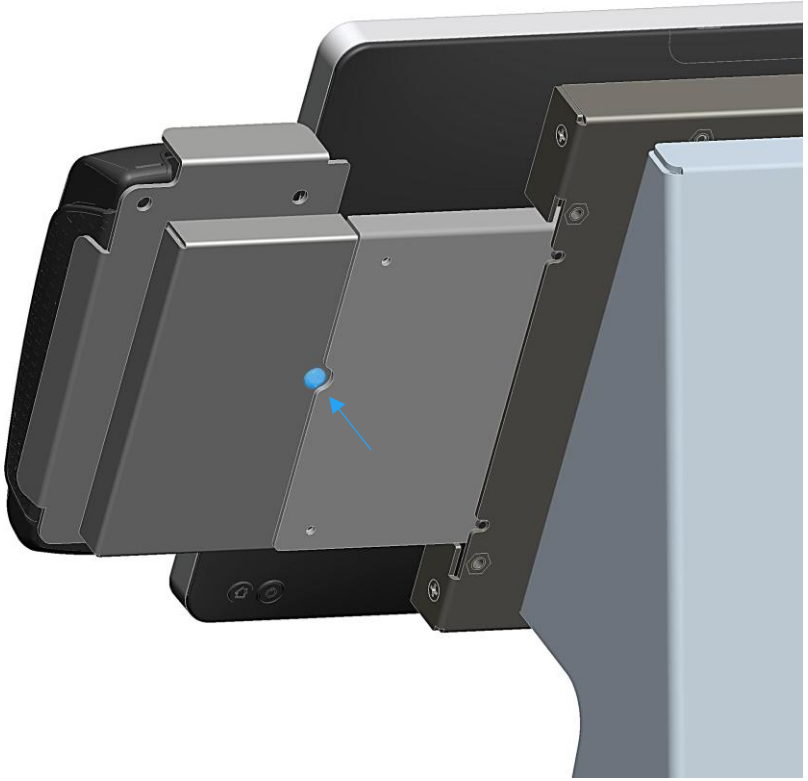

© Copyright 2021 Elo Touch Solutions, Inc.

Learn more about Elo at **EloTouch.com**.

Americas
Tel +1 408 597 8000
EloSales.NA@elotouch.com

Europe (EMEA)
Tel +32 16 930 136
EMEA.sales@elotouch.com

Asia Pacific
Tel +86 (21) 3329 1385
EloAsia@elotouch.com

The information in this document is subject to change without notice. Elo Touch Solutions, Inc. and its Affiliates (collectively "Elo") makes no representations or warranties with respect to the contents herein, and specifically disclaims any implied warranties of merchantability or fitness for a particular purpose. Elo reserves the right to revise this publication and to make changes from time to time in the content hereof without obligation of Elo to notify any person of such revisions or changes.

No part of this publication may be reproduced, transmitted, transcribed, stored in a retrieval system, or translated into any language or computer language, in any form or by any means, including, but not limited to, electronic, magnetic, optical, chemical, manual, or otherwise without prior written permission of Elo Touch Solutions, Inc.

Elo, the Elo logo and Wallaby are either trademarks or registered trademarks of Elo Touch Solutions, Inc.