Smart Interactive Whiteboard

Quick Start Guide

ZHEJIANG DAHUA VISION TECHNOLOGY CO., LTD. V1.0.1

Foreword

General

This manual introduces the functions and operations of the smart interactive whiteboard (hereinafter referred to as "the device"). Read carefully before using the whiteboard, and keep the manual safe for future reference.

Symbols

The following symbols might appear in the manual.

Symbol	Description
DANGER	Indicates a high potential hazard which, if not avoided, will result in death or serious injury.
WARNING	Indicates a medium or low potential hazard which, if not avoided, could result in slight or moderate injury.
CAUTION	Indicates a potential risk which, if not avoided, could result in property damage, data loss, reductions in performance, or unpredictable results.
TIPS	Provides methods to help you solve a problem or save time.
NOTE	Provides additional information as a supplement to the text.

Revision History

Version	Revision Content	Release Time
V1.0.1	Updated the bottom panel.	May 2026
V1.0.0	First release.	April 2026

Privacy Protection Notice

As the device user, you might collect the personal data of individuals such as their names, email addresses, face images, audio and fingerprints. You shall be fully responsible for any activities associated with processing personal data. You commit to comply with your local privacy protection laws and regulations to protect the legitimate rights and interests of individuals, and shall implement measures which are required by applicable law, including but not limited to, providing clear and comprehensive information to individuals before processing their personal data, obtaining consent from individuals when necessary, informing individuals of the existence of the surveillance area, and providing required contact information.

Intelligent Product Usage Statement

Intelligent products utilize AI technology to effectively enhance security. The intelligent recognition and alarm functions of the product might be affected by factors such as environmental lighting,

camera angles, object obstructions, and network delays, potentially leading to false alarms, missed alerts, or response delays. This intelligent product is solely intended to be used as a security assistance tool. The results from performing identification are for reference only and do not constitute absolute guarantee of personal or property safety. Users need to combine these products with necessary physical security measures to enhance overall protection. Except as otherwise provided by laws or in the event of intentional or gross negligence on the part of the company, the company shall not be liable for any losses caused by the aforementioned factors not attributable to the company.

About the Manual

- This manual is provided for general reference only. Discrepancies might exist between the product and this manual, including but not limited to printed, electronic, or any other editions.
- The manual will be updated according to the latest laws and regulations of related jurisdictions. Specifications and documentation are subject to change without prior notice. For the latest versions, as well as legal notices, consult the printed manual, the product webpage, our official website, or scan the QR code to access the electronic edition.
- The manual will be updated as necessary to reflect product changes and applicable legal requirements. These updates will not diminish your statutory rights, nor will they remove or weaken the safety information or essential instructions provided at the time of purchase.
- Although we make every effort to ensure accuracy, errors or deviations in descriptions of functions, operations, or technical data might occur. If there is any uncertainty or controversy, we reserve the right of final explanation.
- All trademarks, registered trademarks and company names referenced in this manual are the property of their respective owners.

Important Safeguards and Warnings

This section introduces content covering the proper handling of the device, hazard prevention, and prevention of property damage. Read carefully before using the device, and comply with the guidelines when using it.

Transportation Requirements

Transport the device under allowed humidity and temperature conditions.

Storage Requirements

Store the device under allowed humidity and temperature conditions.

Installation Requirements

DANGER

Stability Hazard

Possible result: The device might fall down and cause serious personal injury.

Preventive measures (including but not limited to):

- Only use cabinets and brackets specified for the device.
- Only use furniture and structures that can safely support the device.
- Do not place the device on the edge of the furniture or structure that is supporting it.
- Always educate children about the dangers of climbing furniture to reach the device and its controller.
- Carefully arrange the cables connected to the device to avoid people tripping over them and pulling on them.
- Make sure that the device is installed on a stable surface.
- Do not put the device on tall furniture, such as cabinets and bookcases, without first ensuring that the supporting structure is stable enough to bear the device.
- Do not place the device on fabric and other similar material.
- Do not place items, such as toys and remote controls, that may entice children to climb on top of the device or furniture on which the device is placed.

WARNING

- Do not connect the power adapter to the device while the adapter is powered on.
- Strictly comply with the local electrical safety code and standards. Make sure that the ambient voltage is stable and meets the power supply requirements of the device.
- Do not connect the device to two or more kinds of power supplies, to avoid safety risks and damage to the device.
- Please follow the electrical requirements to power the device.

- Following are the requirements for selecting a power adapter.
  - The power supply must conform to the requirements of IEC 60950-1 and IEC 62368-1 standards.
  - The voltage must meet the SELV (Safety Extra Low Voltage) requirements and not exceed ES-1 standards.
  - When the power of the device does not exceed 100 W, the power supply must meet LPS requirements and be no higher than PS2.
- We recommend using the power adapter provided with the device.
- When selecting the power adapter, the power supply requirements (such as rated voltage) are subject to the device label.

- Personnel working at heights must take all necessary measures to ensure personal safety including wearing a helmet and safety belts.
- Do not install the device in a place exposed to sunlight or near heat sources.
- Keep the device away from dampness, dust, and soot.
- Install the device in a well-ventilated place, and do not block its ventilation.
- The screen must not face the air outlet of the air conditioner at a close distance.
- The device is a class I electrical appliance. Make sure that the power supply of the device is connected to a power socket with protective earthing.
- The device must be installed in a location that only professionals can access. Non-professionals are not allowed to enter the installation area.
- When installing the device, make sure that the power plug can be easily reached to cut off the power.
- Do not place an open flame on the device, such as a lit candle.
- Prevent liquid from dripping or splashing on the device. Do not put any objects filled with liquid, such as a vase, on top of the device.
- The housing or bracket of the product must be reliably connected to the protective ground of the installation site.
- Affix the device securely to the building before use.
- The system of the product must be correctly installed according to the instructions.

Operation Requirements

WARNING

- High voltage inside the device. Do not disassemble the device without a qualified professional present to avoid the risk of being exposed to danger.
- Improper use of the battery might result in a fire or explosion.
- Replace unwanted batteries with new batteries of the same type and model.
- Make sure all cables are connected correctly before plugging the device into the power. Do not overload the power socket or pull the power cord. Otherwise, it might cause fire or electric shock.
- Do not ingest battery. Chemical Burn Hazard. This product contains a coin cell battery. If the coin cell battery is swallowed, it can cause severe internal burns in just 2 hours and can lead to death.

DANGER

- The device or remote control contains button batteries. Do not swallow the batteries due to the risk of chemical burns.

Possible result: The swallowed button battery can cause serious internal burns and death within 2 hours.

Preventive measures (including but not limited to):

- ◇ Keep new and used batteries out of reach of children.
- ◇ If the battery compartment is not securely closed, stop using the product immediately and keep out of reach of children.
- ◇ Seek immediate medical attention if a battery is believed to be swallowed or inserted inside any part of the body.

- Battery Pack Precautions

Preventive measures (including but not limited to):

- ◇ Do not transport, store or use the batteries in high altitudes with low pressure and environments with extremely high and low temperatures.
- ◇ Do not dispose the batteries in fire or a hot oven, or mechanically crush or cut the batteries to avoid an explosion.
- ◇ Do not leave the batteries in environments with extremely high temperatures to avoid explosions and leakage of flammable liquid or gas.

WARNING

- There is high pressure in the device. To avoid the risk of electric shock, non-professionals should not open the back cover.
- Ground the device to protective ground before you power it on.

- The device can run continuously for up to 16 hours each day. Please do not keep it running for longer than this time, otherwise the life of the screen will be affected.
- Do not drop or splash liquid onto the device, and make sure that there is no object filled with liquid on the device to prevent liquid from flowing into it.
- Operate the device within the rated range of power input and output.
- Do not disassemble the device without professional instruction.
- Use the device under allowed humidity (10%–90% (RH)) and temperature (0 °C to +40 °C, or +32 °F to +104 °F) conditions.
- The device is a class I electrical appliance. Make sure that the power supply of the device is connected to a power socket with protective earthing.
- The appliance coupler is a disconnection device. Keep it at a convenient angle when using it.

Maintenance Requirements

DANGER

Replacing unwanted batteries with the wrong type of new batteries might result in explosion.

Preventive measures (including but not limited to):

- Replace unwanted batteries with new batteries of the same type and model to avoid the risk of fire and explosion.
- Dispose of the old batteries as instructed.

- Power off the device before maintenance. Do not use the liquid cleaner or spray cleaner when cleaning the device.

- Use the clean and soft cloth or use the special lens wiping cloth when cleaning the surface of display screen. Do not use the wet cloth to clean the display screen. Otherwise, it may do harm to the screen.
- The appliance coupler is a disconnection device. Keep it at a convenient angle when using it.

Table of Contents

Foreword I
Important Safeguards and Warnings III
1 Introduction 1
2 Packing List 2
3 Installation 3
3.1 Device Dimensions 3
3.2 Preparation 5
3.3 Installation Accessories 6
3.4 Installation Procedure 6
4 Appearance 10
Appendix 1 Security Commitment and Recommendation 14

1 Introduction

The smart interactive whiteboard is an integrated multimedia device consisting of a large HD screen, a computer, an electronic whiteboard, an audio amplifier, applications, and a central control system.

The device supports the following functions and features.

- 4K HD LCD display.
- Android and Windows system switching (for Windows, you need to install the computer module).
- One-tap projection of devices such as mobile phones and tablets.
- Electronic whiteboard.
- Various software such as Microsoft Office and audio and video players.
- Supports video conference.

2 Packing List

Check whether there is any obvious damage on the packing box. Unpack the box and check whether the components are complete according to the packing list.

Table 2-1 Packing list

Item	Quantity	Item	Quantity
Smart interactive whiteboard	1	Power cord	1
Stylus pen	2	Quick start guide	1
Wall-mount bracket	1	Remote control	1
Legal and regulatory information	1	Wall-mount screw package	1
Wireless plug-in module	1	—	—

3 Installation

3.1 Device Dimensions

65-Inch series device

Figure 3-1 Installation dimensions (mm [inch])

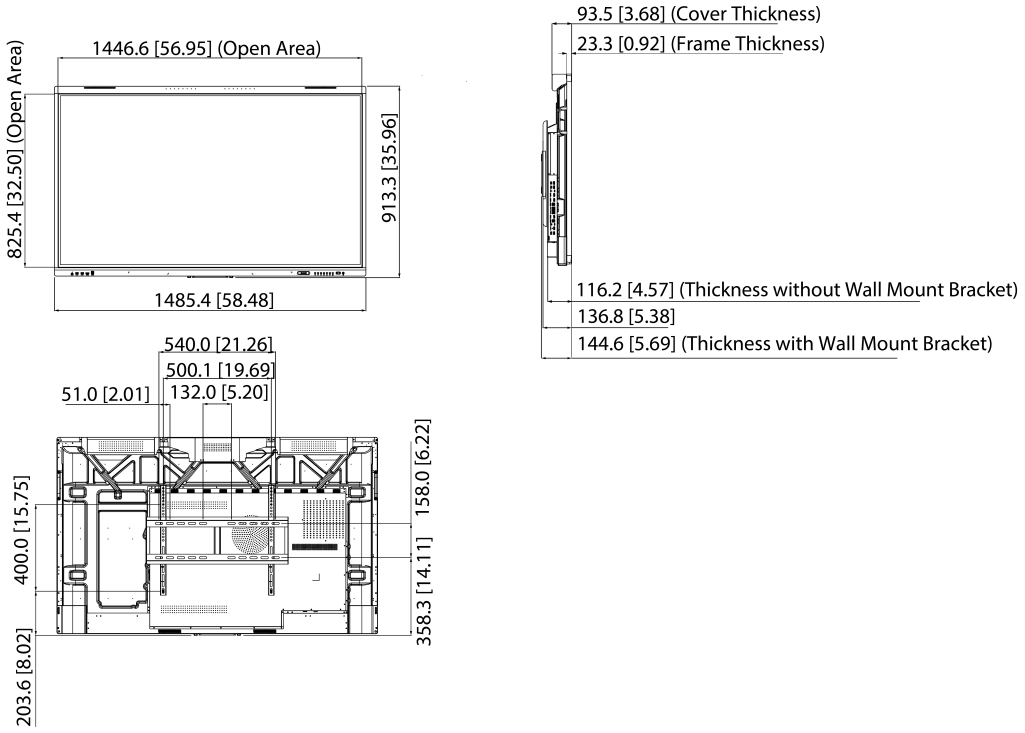

75-Inch series device

Figure 3-2 Installation dimensions (mm [inch])

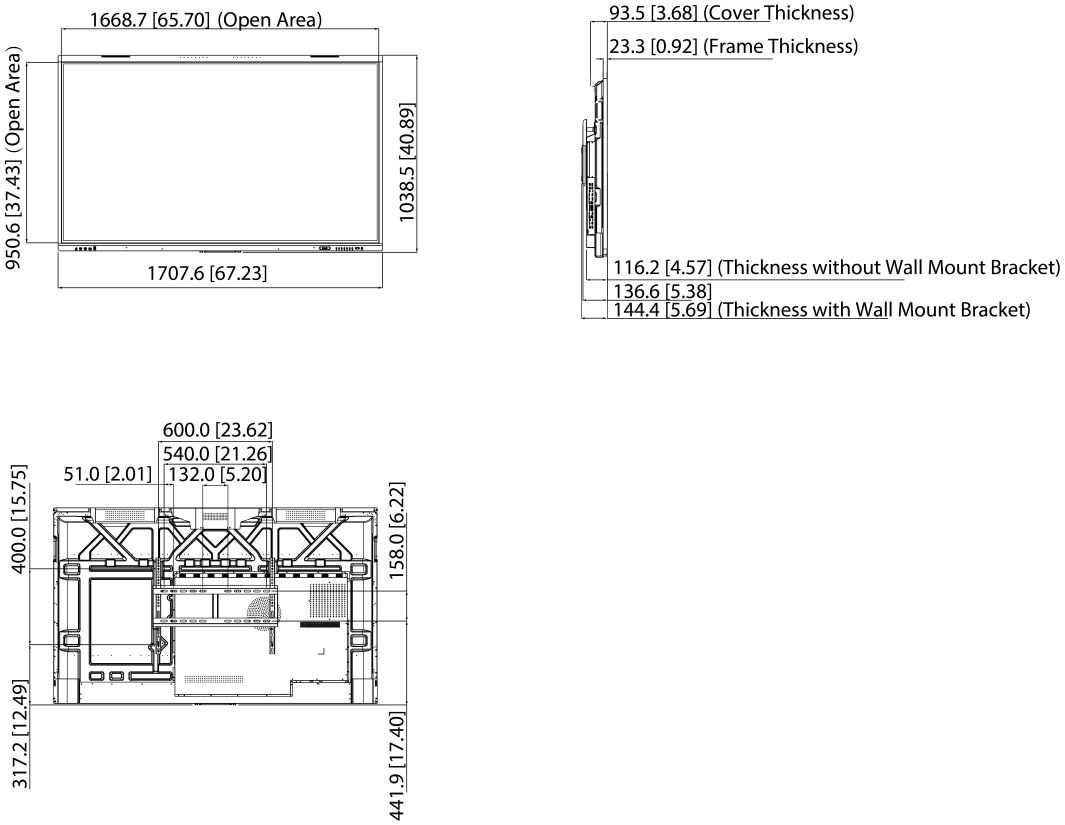

86-Inch series device

Figure 3-3 Installation dimensions (mm [inch])

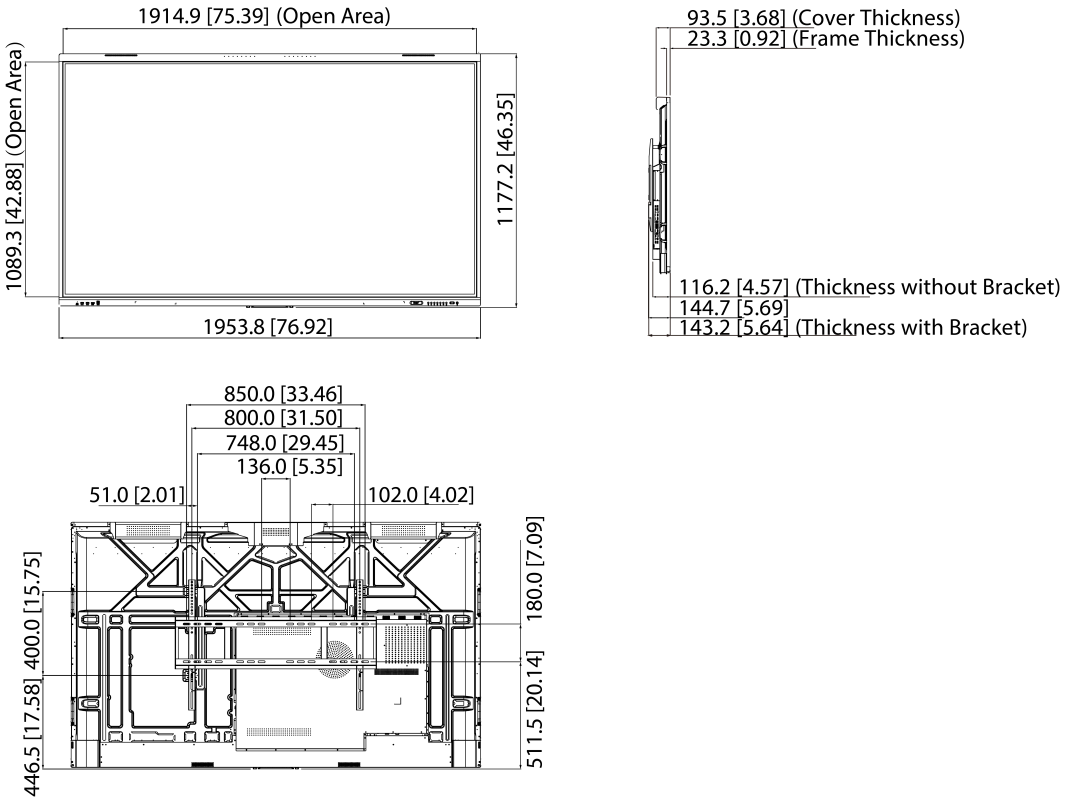

3.2 Preparation

To ensure proper functioning and installation safety, verify that the site conditions meet the installation requirements before proceeding.

Table 3-1 Preparation

Items	Description
Grounding	Because the device uses infrared touch technology, it has specific grounding requirements. The on-site grounding environment must meet the following standards. ● Live wire to neutral wire. Normally between 210–240 VAC. ● Live wire to ground wire. Normally between 210–240 VAC. ● Neutral wire to ground wire. Normally close to 0 VAC.
Power supply	The power supply circuit for the device should be independent from lighting and other circuits to avoid power frequency interference.
Wall	Make sure that the wall load-bearing requirement is not less than 160 kg.

Items	Description
Space	Make sure that there is enough space for the device. The ideal reserved space is 10 mm greater than the length and height of the device. If you want to embed the device into the wall, make sure that there is enough space to use the ports and buttons on the 2 sides of the device.
Tools	Prepare the installation tools. ● To install the device onto a brick or concrete wall, you need to prepare tools such as an electric screwdriver, impact driver, hammer, open-ended spanner, laser level or spirit level, crosshead screwdriver, and work gloves. ● To install the device onto a wooden wall, you need to prepare tools such as an electric screwdriver, hammer, self-tapping screws, laser level or spirit level, crosshead screwdriver, and work gloves.

3.3 Installation Accessories

Figure 3-4 Installation accessories

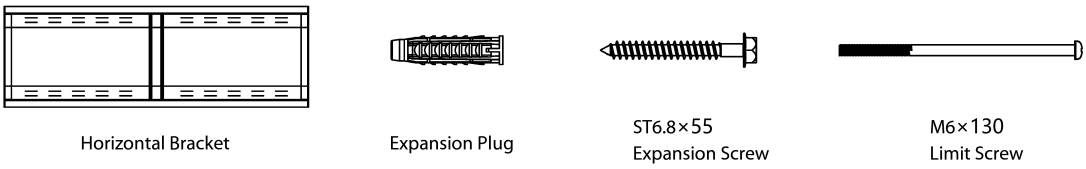

Table 3-2 Number of installation accessories

Name	65-Inch Series	75-Inch Series	86-Inch Series
Horizontal bracket The vertical beam bracket has been pre-installed on the device.	1	1	1
Expansion plug	8	8	8
ST6.8 × 55 expansion screw	8	8	8
M6 × 130 limit screw	2	2	2

3.4 Installation Procedure

Procedure

Step 1 Secure the device to the vertical beam bracket using the pre-installed M6×130 limit screws, with an insertion depth of 2 mm to 10 mm.

Step 2 Mark screw locations on the wall, and then drill holes.

1. Identify a suitable installation position, and then mark the screw locations.

   The recommended installation height above the ground is 80 cm–85 cm (31.5 inches–33.5 inches).

2. Drill holes at the marked locations.

Figure 3-5 Required hole diameter and depth

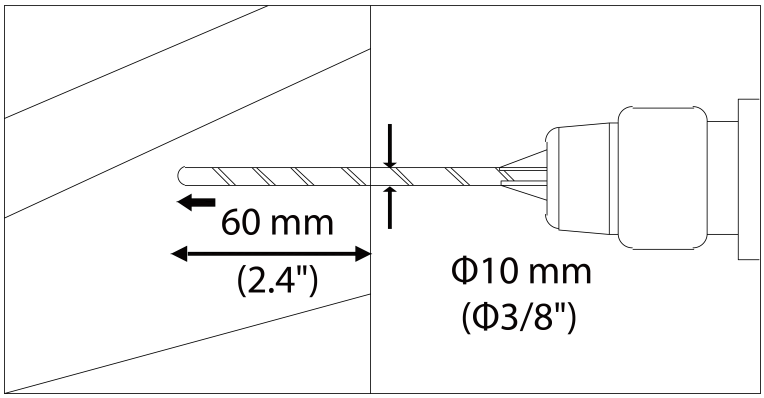

Step 3 Use the ST6.8 × 55 expansion screws to attach the horizontal bracket onto the wall and keep it horizontal.

Figure 3-6 Install the horizontal bracket

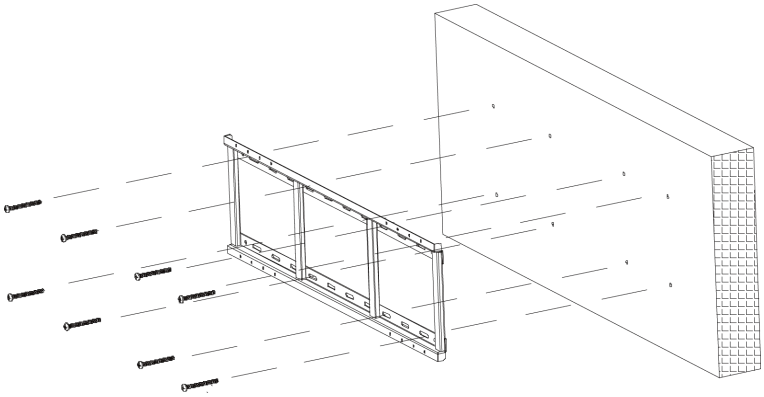

Step 4 Mount the device onto the wall using the vertical beam bracket installed on the device.

You can use the holes on the vertical brackets to adjust the height of the device.

- For 65-inch series and 75-inch series, you can use the first to the sixth hole from up to down, with the maximum adjustment range of 75 mm.
- For 86-inch series, you can use the first to the eleventh hole from up to down, with the maximum adjustment range of 150 mm.

Step 5 Tighten the screws at the bottom of the vertical brackets to secure the brackets.

Make sure that the appropriate screwdriver is used.

Figure 3-7 Wall-mounting installation

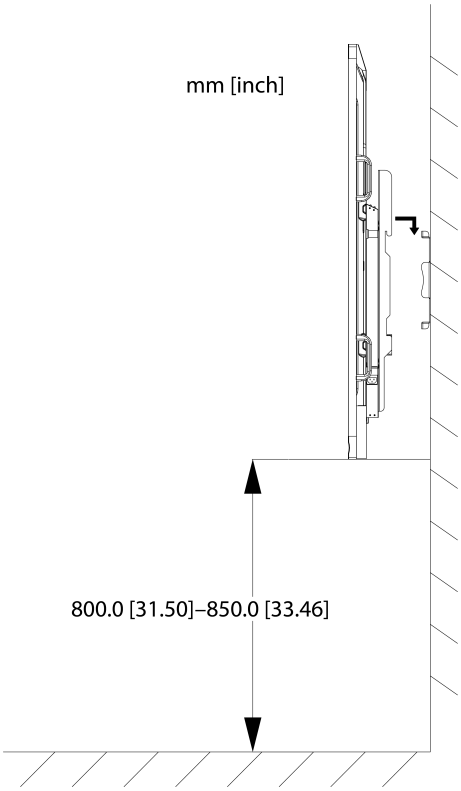

Figure 3-8 Floor-standing installation

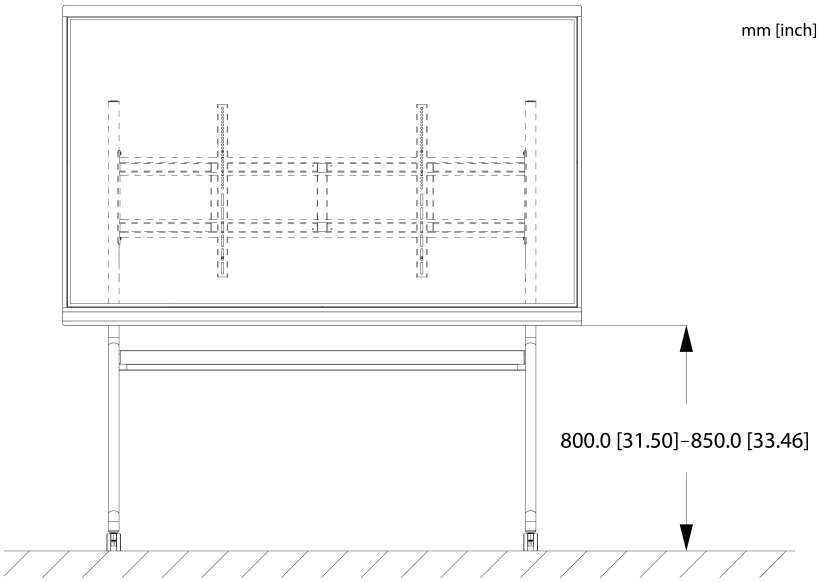

Step 6 Insert the wireless plug-in module into the groove at the bottom of the device.

Make sure that the arrow on the module is facing forward, and then listen for a click sound to confirm it is securely attached.

Figure 3-9 Insert the wireless plug-in module

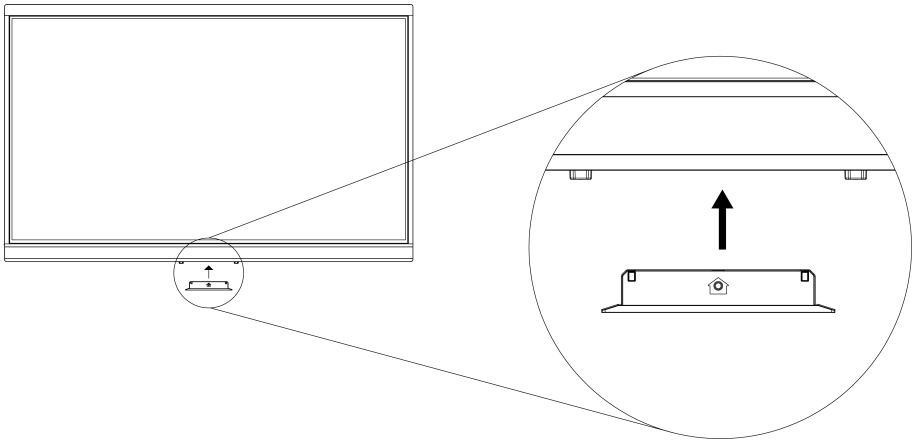

4 Appearance

Figure 4-1 Appearance

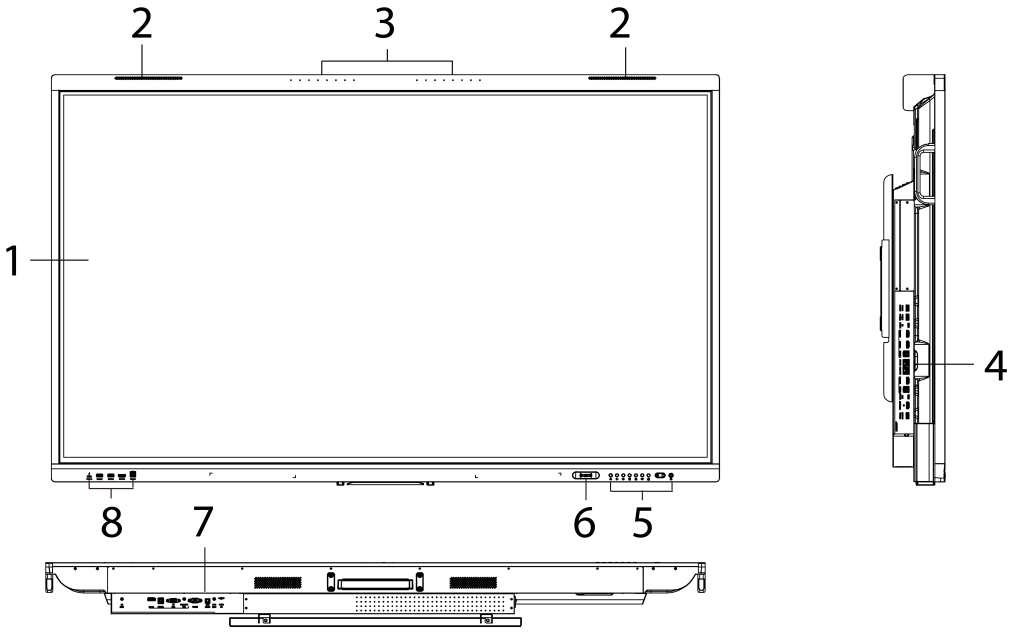

Table 4-1 Appearance description

No.	Description
1	LCD.
2	Speaker holes. Play multimedia audio.
3	Microphones. Pick up live audio.
4	Ports on the side panel. For details, see Table 4-3 .
5	Function buttons on the front panel.
6	NFC module. You can touch this area with a mobile phone that supports NFC to unlock the screen on the Android system.
7	Ports on the bottom panel. For details, see Table 4-4 .
8	Ports on the front panel. For details, see Table 4-2 .

Figure 4-2 Ports and buttons on the front panel

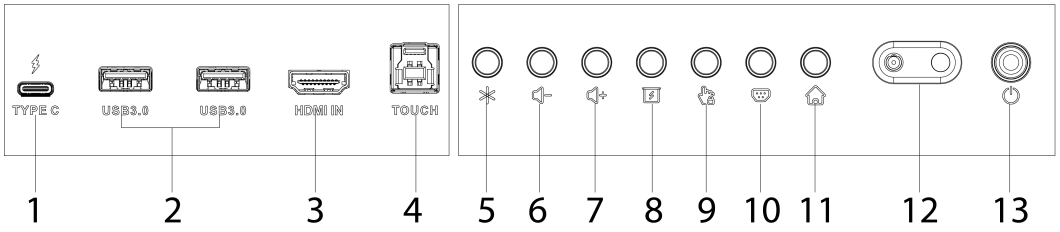

Table 4-2 Description of ports on the front panel

No.	Description
1	Full-feature Type-C port. Connect devices such as laptops to enable screen mirroring, touch control of the laptop through the device, charging external devices like laptops, and more.
2	USB 3.0 port.
3	HD audio and video signal input port. Connects to the computer, set-top box, and other video devices with HDMI output ports.
4	Touch port. Supports reverse control. We recommend using this port together with the HDMI IN port next to it to enable synchronized video input and touch functionality.
5	Custom button. User-definable function.
6	Volume down button.
7	Volume up button.
8	Curtain control button. Press this button to activate the curtain mode.
9	Touch lock button. You can turn the touch lock on or off.
10	Input source selection button. Used to choose the input source for device connection.
11	Home button. Press to return to the home screen.
12	• Light sensor. The device recognizes the ambient brightness through the light sensor and automatically adjusts the backlight according to the ambient brightness. • IR sensor. Receives signals from the remote control.
13	Power button. Press and hold for 5 seconds to turn off, short press to turn on, wake or sleep the screen.

Figure 4-3 Ports on the side panel

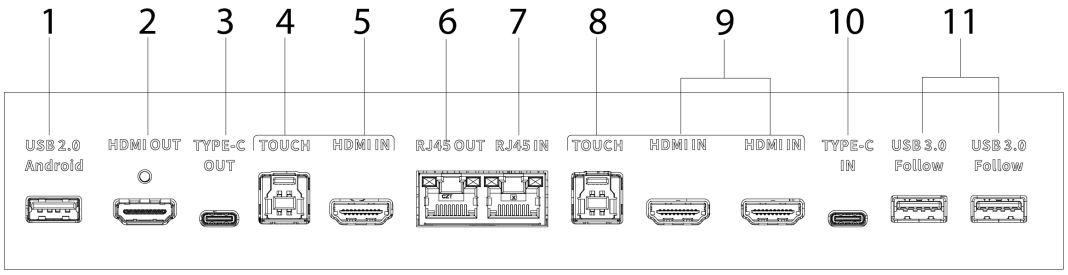

Table 4-3 Description of ports on the side panel

No.	Description
1	USB 2.0 Android. The USB devices are accessible only in Android system.
2	HD audio and video signal output port. Transmits uncompressed HD video and multi-channel audio data.
3	Type-C OUT port. Supports connecting USB 3.0 Flash drive and delivering video output up to 4K@60 Hz.

No.	Description
4	Touch port. Supports reverse control. We recommend using this port together with the HDMI IN port next to it to enable synchronized video input and touch functionality.
5	HD audio and video signal input port. Connects to the computer, set-top box, and other video devices with HDMI output ports.
6	• RJ45 OUT port. Used for cascading other devices to share the network. • RJ45 IN port. Connects an Ethernet cable to access the network.
7	
8	Touch port. Supports reverse control. We recommend using this port together with the HDMI IN port next to it to enable synchronized video input and touch functionality.
9	HD audio and video signal input port. Connects to the computer, set-top box, and other video devices with HDMI output ports.
10	Type-C IN port. Used to connect devices like laptops to the device for screen mirroring.
11	USB 3.0 Follow port. The USB devices can follow and connect to Android and OPS signal sources.

Figure 4-4 Ports on the bottom panel

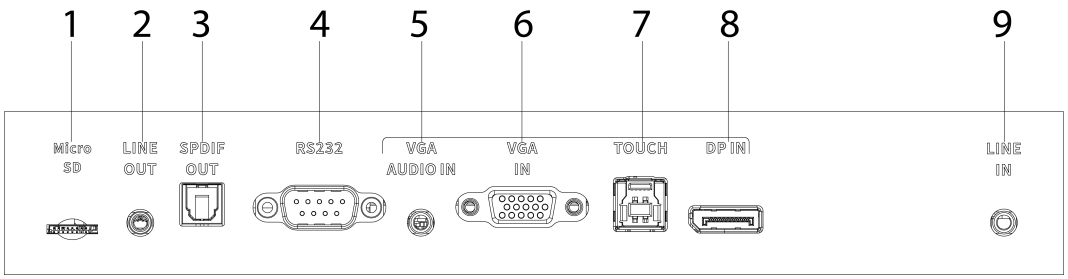

Table 4-4 Description of ports on the bottom panel

No.	Description
1	MicroSD card slot. Used for inserting microSD cards.
2	LINE OUT port. An audio output port that connects to the speakers.
3	SPDIF digital audio output port. Connects external speakers.
4	RS-232 debugging serial port. Connect to control devices with RS-232 port for serial data transmission.
5	VGA audio input port. Used to connect audio from other devices to the device for playback.
6	VGA input port. Connects to VGA signal sources such as computers, set-top boxes, or other video devices with VGA output ports.
7	Touch port. Supports reverse control. We recommend using this port together with the VGA IN or DP IN port to enable synchronized video input and touch functionality.
8	DP input port. Used to connect computers and other video devices with DP output ports.

No.	Description
9	Audio input port. Used with the Android system.

Appendix 1 Security Commitment and Recommendation

Zhejiang Dahua Vision Technology Co., Ltd. (hereinafter referred to as "Dahua") attaches great importance to cybersecurity and privacy protection, and continues to invest special funds to comprehensively improve the security awareness and capabilities of Dahua employees and provide adequate security for products. Dahua has established a professional security team to provide full life cycle security empowerment and control for product design, development, testing, production, delivery and maintenance. While adhering to the principle of minimizing data collection, minimizing services, prohibiting backdoor implantation, and removing unnecessary and insecure services (such as Telnet), Dahua products continue to introduce innovative security technologies, and strive to improve the product security assurance capabilities, providing global users with security alarm and 24/7 security incident response services to better protect users' security rights and interests. At the same time, Dahua encourages users, partners, suppliers, government agencies, industry organizations and independent researchers to report any potential risks or vulnerabilities discovered on Dahua devices to Dahua PSIRT, for specific reporting methods, please refer to the cyber security section of Dahua official website.

Product security requires not only the continuous attention and efforts of manufacturers in R&D, production, and delivery, but also the active participation of users that can help improve the environment and methods of product usage, so as to better ensure the security of products after they are put into use. For this reason, we recommend that users safely use the device, including but not limited to:

Account Management

1. **Use complex passwords**

   Please refer to the following suggestions to set passwords:

   - The length should not be less than 8 characters;
   - Include at least two types of characters: upper and lower case letters, numbers and symbols;
   - Do not contain the account name or the account name in reverse order;
   - Do not use continuous characters, such as 123, abc, etc.;
   - Do not use repeating characters, such as 111, aaa, etc.
2. **Change passwords periodically**

   It is recommended to periodically change the device password to reduce the risk of being guessed or cracked.
3. **Allocate accounts and permissions appropriately**

   Appropriately add users based on service and management requirements and assign minimum permission sets to users.
4. **Enable account lockout function**

   The account lockout function is enabled by default. You are advised to keep it enabled to protect account security. After multiple failed password attempts, the corresponding account and source IP address will be locked.
5. **Set and update password reset information in a timely manner**

   Dahua device supports password reset function. To reduce the risk of this function being used by threat actors, if there is any change in the information, please modify it in time. When setting security questions, it is recommended not to use easily guessed answers.

Service Configuration

1. **Enable HTTPS**

   It is recommended that you enable HTTPS to access Web services through secure channels.
2. **Encrypted transmission of audio and video**

   If your audio and video data contents are very important or sensitive, we recommend you to use encrypted transmission function in order to reduce the risk of your audio and video data being eavesdropped during transmission.
3. **Turn off non-essential services and use safe mode**

   If not needed, it is recommended to turn off some services such as SSH, SNMP, SMTP, UPnP, AP hotspot etc., to reduce the attack surfaces.

   If necessary, it is highly recommended to choose safe modes, including but not limited to the following services:

   - SNMP: Choose SNMP v3, and set up strong encryption and authentication passwords.
   - SMTP: Choose TLS to access mailbox server.
   - FTP: Choose SFTP, and set up complex passwords.
   - AP hotspot: Choose WPA2-PSK encryption mode, and set up complex passwords.
4. **Change HTTP and other default service ports**

   It is recommended that you change the default port of HTTP and other services to any port between 1024 and 65535 to reduce the risk of being guessed by threat actors.

Network Configuration

1. **Enable Allowlist**

   It is recommended that you turn on the allowlist function, and only allow IP in the allowlist to access the device. Therefore, please be sure to add your computer IP address and supporting device IP address to the allowlist.
2. **MAC address binding**

   It is recommended that you bind the IP address of the gateway to the MAC address on the device to reduce the risk of ARP spoofing.
3. **Build a secure network environment**

   In order to better ensure the security of devices and reduce potential cyber risks, the following are recommended:

   - Disable the port mapping function of the router to avoid direct access to the intranet devices from external network;
   - According to the actual network needs, partition the network: if there is no communication demand between the two subnets, it is recommended to use VLAN, gateway and other methods to partition the network to achieve network isolation;
   - Establish 802.1x access authentication system to reduce the risk of illegal terminal access to the private network.

Security Auditing

1. **Check online users**

   It is recommended to check online users regularly to identify illegal users.
2. **Check device log**

By viewing logs, you can learn about the IP addresses that attempt to log in to the device and key operations of the logged users.

3. **Configure network log**

   Due to the limited storage capacity of devices, the stored log is limited. If you need to save the log for a long time, it is recommended to enable the network log function to ensure that the critical logs are synchronized to the network log server for tracing.

Software Security

1. **Update firmware in time**

   According to the industry standard operating specifications, the firmware of devices needs to be updated to the latest version in time in order to ensure that the device has the latest functions and security. If the device is connected to the public network, it is recommended to enable the online upgrade automatic detection function, so as to obtain the firmware update information released by the manufacturer in a timely manner.

2. **Update client software in time**

   We recommend you to download and use the latest client software.

Physical Protection

It is recommended that you carry out physical protection for devices (especially storage devices), such as placing the device in a dedicated machine room and cabinet, and having access control and key management in place to prevent unauthorized personnel from damaging hardware and other peripheral equipment (e.g. USB flash disk, serial port).

ENABLING A SMARTER SOCIETY AND BETTER LIVING

ZHEJIANG DAHUA VISION TECHNOLOGY CO., LTD.
Address: No. 1399, Binxing Road, Binjiang District, Hangzhou, P. R. China | Website: www.dahuasecurity.com | Postcode: 310053
Email: dhoverseas@dhvisiontech.com | Tel: +86-571-87688888 28933188