Smart Interactive Whiteboard

Quick Start Guide

ZHEJIANG DAHUA VISION TECHNOLOGY CO., LTD. V1.0.0

Foreword

General

This manual introduces the functions and operations of the smart interactive whiteboard (hereinafter referred to as "the whiteboard"). Read carefully before using the whiteboard, and keep the manual safe for future reference.

Safety Instructions

The following signal words might appear in the manual.

Signal Words	Meaning
WARNING	Indicates a medium or low potential hazard which, if not avoided, could result in slight or moderate injury.
CAUTION	Indicates a potential risk which, if not avoided, could result in property damage, data loss, reductions in performance, or unpredictable result.
NOTE	Provides additional information as a supplement to the text.

Revision History

Version	Revision Content	Release Time
V1.0.0	First release.	November 2024

Privacy Protection Notice

As the device user or data controller, you might collect the personal data of others such as their face, audio, fingerprints, and license plate number. You need to be in compliance with your local privacy protection laws and regulations to protect the legitimate rights and interests of other people by implementing measures which include but are not limited: Providing clear and visible identification to inform people of the existence of the surveillance area and provide required contact information.

About the Manual

- The manual is for reference only. Slight differences might be found between the manual and the product.
- We are not liable for losses incurred due to operating the product in ways that are not in compliance with the manual.
- The manual will be updated according to the latest laws and regulations of related jurisdictions. For detailed information, see the paper user's manual, use our CD-ROM, scan the QR code or visit our official website. The manual is for reference only. Slight differences might be found between the electronic version and the paper version.

- All designs and software are subject to change without prior written notice. Product updates might result in some differences appearing between the actual product and the manual. Please contact customer service for the latest program and supplementary documentation.
- There might be errors in the print or deviations in the description of the functions, operations and technical data. If there is any doubt or dispute, we reserve the right of final explanation.
- Upgrade the reader software or try other mainstream reader software if the manual (in PDF format) cannot be opened.
- All trademarks, registered trademarks and company names in the manual are properties of their respective owners.
- Please visit our website, contact the supplier or customer service if any problems occur while using the device.
- If there is any uncertainty or controversy, we reserve the right of final explanation.

Important Safeguards and Warnings

This section introduces content covering the proper handling of the whiteboard, hazard prevention, and prevention of property damage. Read carefully before using the whiteboard, and comply with the guidelines when using it.

Storage Requirements

- Stably put the whiteboard onto a support platform that is strong enough to prevent the whiteboard from falling.
- Do not place the whiteboard in a place exposed to sunlight or near heat sources.
- Store the whiteboard under allowed humidity (10%–90% (RH)) and temperature (–20 °C to +60 °C, or –4 °F to +140 °F) conditions.

Installation Requirements

DANGER

- Ensure all the cables are correctly connected before you power on the device. Do not overload the power socket or pull the power cord to avoid electric shock and fires breaking out.
- Stability Hazard

  Possible result: The device might fall down and cause serious personal injury.

  Preventive measures (including but not limited to):

  - Only use cabinets and brackets specified for the device.
  - Only use furniture and structures that can safely support the device.
  - Do not place the device on the edge of the furniture or structure that is supporting it.
  - Always educate children about the dangers of climbing furniture to reach the device and its controller.
  - Carefully arrange the cables connected to the device to avoid people tripping over them and pulling on them.
  - Make sure that the device is installed on a stable surface.
  - Do not put the device on tall furniture, such as cabinets and bookcases, without first ensuring that the supporting structure is stable enough to bare the device.
  - Do not place the device on fabric and other similar material.
  - Do not place items, such as toys and remote controls, that may entice children to climb on top of the device or furniture on which the device is placed.

WARNING

- Use the standard power adapter. We will assume no responsibility for any problems caused by the use of a nonstandard power adapter. Do not connect the power adapter to the device while the adapter is powered on.
- Use the wall mount bracket that is compatible with the product, and make sure that qualified professionals install it.
- Please follow the electrical requirements to power the device.
  - Following are the requirements for selecting a power adapter.

- The power supply must conform to the requirements of IEC 60950-1 and IEC 62368-1 standards.
- The voltage must meet the SELV (Safety Extra Low Voltage) requirements and not exceed ES-1 standards.
- When the power of the device does not exceed 100 W, the power supply must meet LPS requirements and be no higher than PS2.

◇ We recommend using the power adapter provided with the device.

◇ When selecting the power adapter, the power supply requirements (such as rated voltage) are subject to the device label.

- The screen must not face the air outlet of the air conditioner at a close distance.
- Do not install the device in a place exposed to sunlight or near heat sources.
- Keep the device away from dampness, dust, and soot.
- Install the device in a well-ventilated place, and do not block its ventilation.
- Install the device on a stable surface to prevent it from falling.
- The device is a class I electrical appliance. Make sure that the power supply of the device is connected to a power socket with protective earthing.
- Use the power cords that are recommended for the region and conform to the rated power specifications.
- When installing the device, make sure that the power plug can be easily reached to cut off the power.

Operation Requirements

DANGER

- The device or remote control contains button batteries. Do not swallow the batteries due to the risk of chemical burns.

  Possible result: The swallowed button battery can cause serious internal burns and death within 2 hours.

  Preventive measures (including but not limited to):

  ◇ Keep new and used batteries out of reach of children.

  ◇ If the battery compartment is not securely closed, stop using the product immediately and keep out of reach of children.

  ◇ Seek immediate medical attention if a battery is believed to be swallowed or inserted inside any part of the body.
- Battery Pack Precautions

  Preventive measures (including but not limited to):

  ◇ Do not transport, store or use the batteries in high altitudes with low pressure and environments with extremely high and low temperatures.

  ◇ Do not dispose the batteries in fire or a hot oven, or mechanically crush or cut the batteries to avoid an explosion.

  ◇ Do not leave the batteries in environments with extremely high temperatures to avoid explosions and leakage of flammable liquid or gas.

  ◇ Do not leave the batteries in environments with extremely high temperatures to avoid explosions and leakage of flammable liquid or gas.

WARNING

- There is high pressure in the device. To avoid the risk of electric shock, non-professionals should not open the back cover.
- Ground the device to protective ground before you power it on.

- Do not drop or splash liquid onto the device, and make sure that there is no object filled with liquid on the device to prevent liquid from flowing into it.
- Operate the device within the rated range of power input and output.
- Do not disassemble the device without professional instruction.
- Use the device under allowed humidity (10%–90% (RH)) and temperature (0 °C to +40 °C, or +32 °F to +104 °F) conditions.
- The device is a class I electrical appliance. Make sure that the power supply of the device is connected to a power socket with protective earthing.
- The appliance coupler is a disconnection device. Keep it at a convenient angle when using it.

Maintenance Requirements

DANGER

Replacing unwanted batteries with the wrong type of new batteries might result in explosion.

Preventive measures (including but not limited to):

- Replace unwanted batteries with new batteries of the same type and model to avoid the risk of fire and explosion.
- Dispose of the old batteries as instructed.

- Power off the device before maintenance. Do not use the liquid cleaner or spray cleaner when cleaning the device.
- Use the clean and soft cloth or use the special lens wiping cloth when cleaning the surface of display screen. Do not use the wet cloth to clean the display screen. Otherwise, it may do harm to the screen.
- The appliance coupler is a disconnection device. Keep it at a convenient angle when using it.

Table of Contents

Foreword I
Important Safeguards and Warnings III
1 Introduction 1
2 Packing List 2
3 Installation 3
3.1 Preparation 3
3.2 Installation Accessories 3
3.3 Installation Procedure 4
4 Appearance and Structure 8
Appendix 1 Touch Operation 11
Appendix 2 Security Commitment and Recommendation 12

1 Introduction

The smart interactive whiteboard is an integrated multimedia device, which integrates a large HD screen, a computer, an electronic whiteboard, an audio amplifier, applications, and a central control system.

The whiteboard supports the following functions and features:

- 4K HD LCD display.
- Switch between Android and Windows systems (for Windows, you need to install a computer module).
- One-tap projection of devices such as mobile phones and tablets.
- Electronic whiteboard.
- Various software such as WPS and audio and video players.
- Supports video conference.

2 Packing List

Check whether there is any obvious damage on the packing box. Unpack the box and check whether the components are complete according to the packing list.

Table 2-1 Packing list

Name	Quantity	Name	Quantity
Smart interactive whiteboard	1	Power cord	1
Stylus pen	2	Quick Start Guide	1
Wall mount bracket	1	Remote control	1
Legal and Regulatory Information	1	Wall-mount screw package	1
Wireless plug-in module	1	—	—

3 Installation

3.1 Preparation

To ensure correct function and safety, remember to check whether your site is ready for the installation in the first place.

Table 3-1 Preparation

Items	Description
Grounding	The IR touchscreen requires that the site should be safely grounded. Check the voltage between the live and neutral wires, between the live and ground wires, and between the neutral and ground wires. If the voltage is abnormal, report the issue to the technician. The specific voltage requirements might vary depending on your local standard.
Power supply	The power supply circuit for the whiteboard should be independent from lighting and other circuits to avoid interference in power frequency.
Wall	Make sure that the wall can bear a load of 160 kg or more.
Space	Make sure that there is enough space for the whiteboard. The ideal reserved space is 10 mm greater than the length and height of the whiteboard. If you want to embed the whiteboard into the wall, make sure that there is enough space to use the ports and buttons on the 2 sides of the whiteboard.
Tools	Prepare the installation tools. ● To install the whiteboard onto a brick or concrete wall, you need an electric screwdriver, impact driver, iron hammer, open-ended spanner, laser level or spirit level, crosshead screwdriver, work gloves, and other tools. ● To install the whiteboard onto a wooden wall, you need an electric screwdriver, iron hammer, self-tapping screws, laser level or spirit level, crosshead screwdriver, work gloves, and other tools.

3.2 Installation Accessories

Figure 3-1 Installation accessories

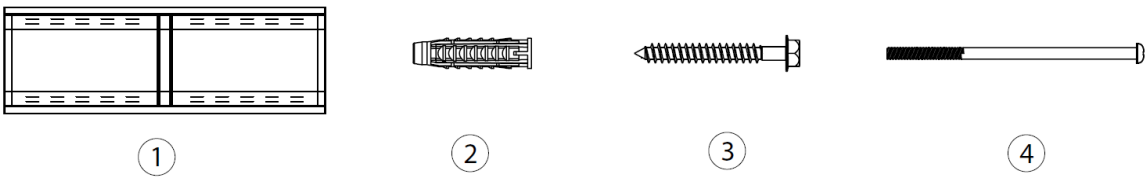

Table 3-2 Number of installation accessories

No.	Name	Quantity		
—	—	65-inch Series	75-inch Series	86-inch Series
①	Horizontal bracket Vertical bracket was installed on the whiteboard already	1	1	1
②	Expansion plug	8	8	8
③	ST6.8 × 55 expansion bolt	8	8	8
④	M6 × 130 adjusting screw	2	2	2

3.3 Installation Procedure

Procedure

Step 1 Use M6 × 130 adjusting screws to pre-tighten the vertical bracket on the whiteboard.

The tail of the screws cannot exceed the end of the vertical bracket.

Figure 3-2 Pre-tighten adjusting screws

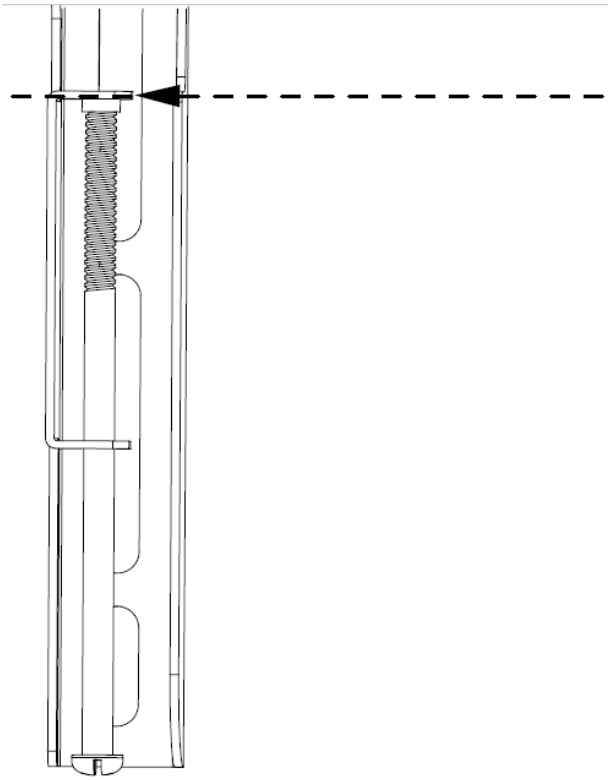

Step 2 Mark screw locations on the wall and then drill holes.

1. Identify a suitable installation position, and then mark the screw locations.

The recommended installation height above the ground is 80–85 cm.

Figure 3-3 Installation dimensions (65-inch series) (mm [inch])

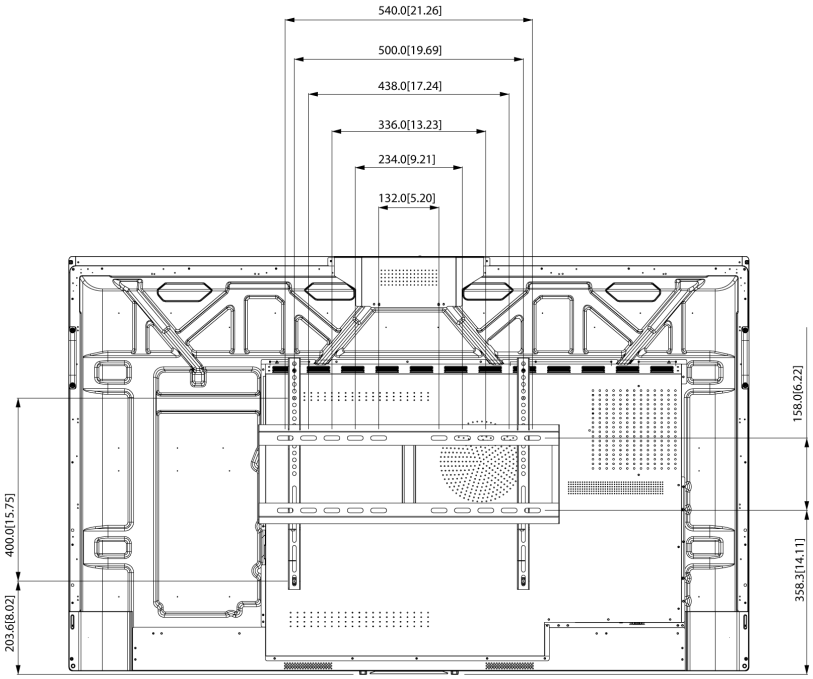

Figure 3-4 Installation dimensions (75-inch series) (mm [inch])

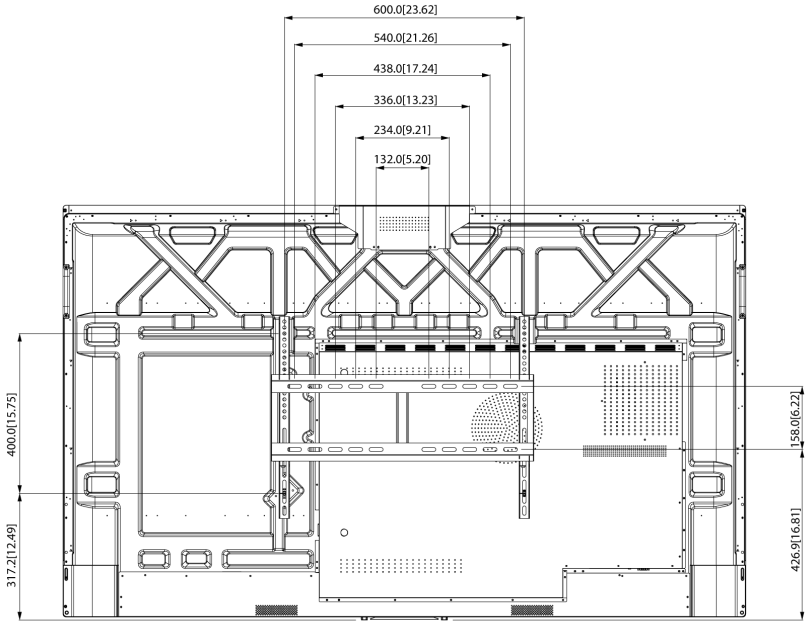

Figure 3-5 Installation dimensions (86-inch series) (mm [inch])

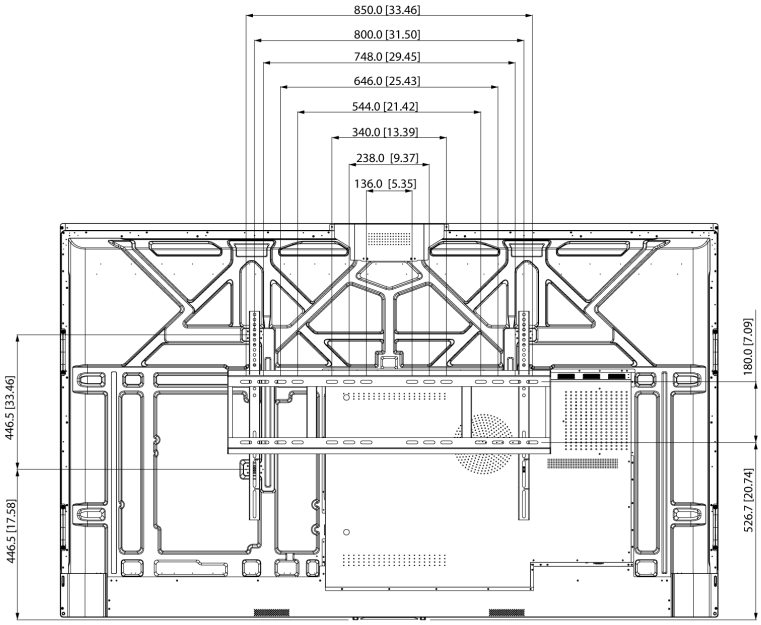

2. Drill holes at the marked locations.

Figure 3-6 Required hole diameter and depth

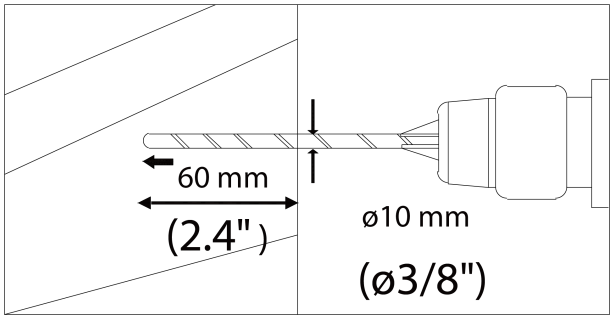

Step 3 Use ST6.8 × 55 expansion screws to attach the horizontal bracket onto the wall and keep it horizontal.

Figure 3-7 Install the horizontal bracket

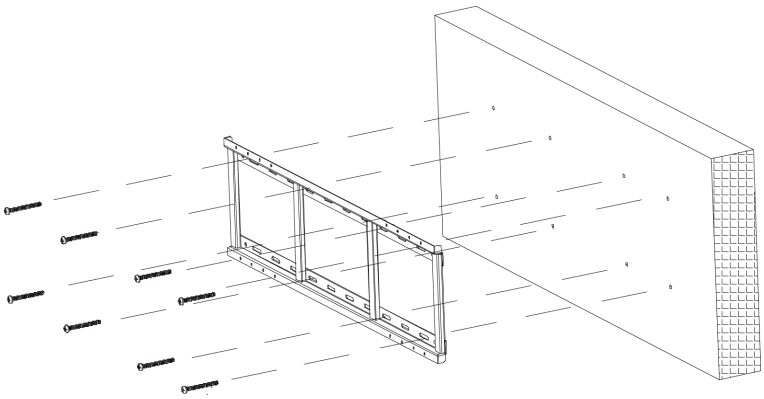

Step 4 Attach the vertical brackets onto the wall.

For 75-inch and 86-inch series, you can use the 1st to the 7th hole from up to down on the vertical brackets to adjust the height of the whiteboard, with the maximum adjustment range of 90 mm.

Step 5 Tighten the adjusting screws at the bottom of the vertical brackets to secure the brackets.

Make sure that the appropriate screwdriver is used.

Figure 3-8 Secure the vertical brackets

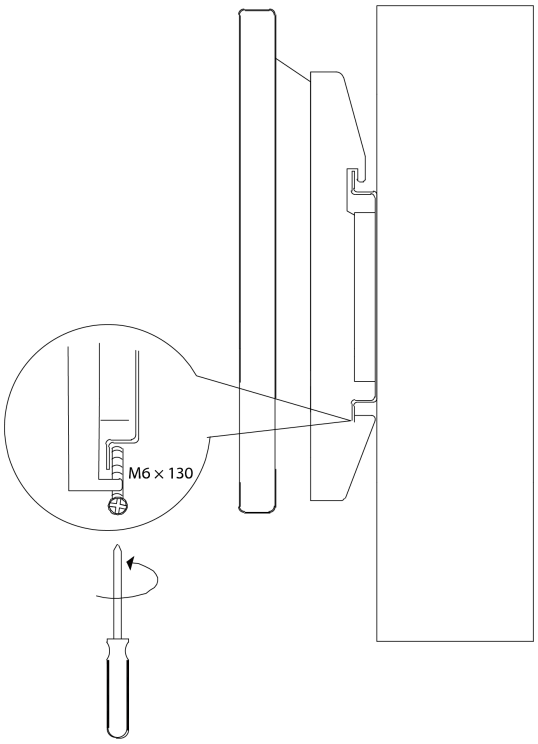

Step 6 Insert the wireless plug-in module into the groove between the two pads at the bottom of the device.

Make sure the arrow on the module is facing forward, and listen for a click sound to confirm it was securely attached.

Figure 3-9 Insert the wireless plug-in module

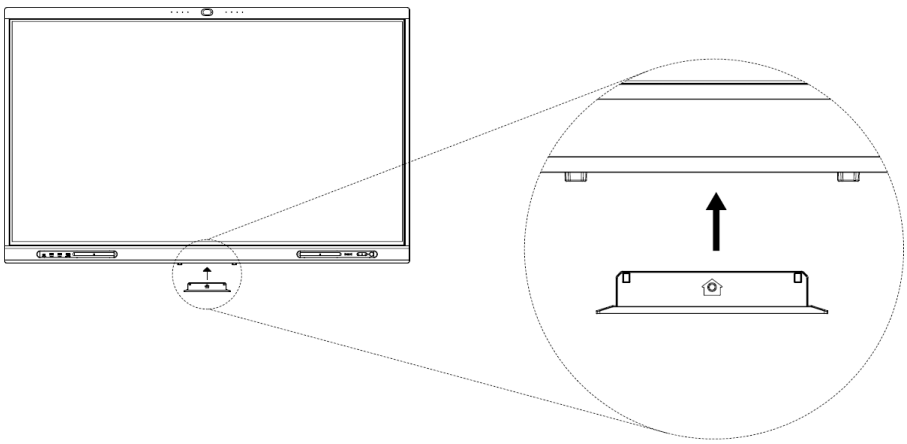

4 Appearance and Structure

Figure 4-1 Appearance

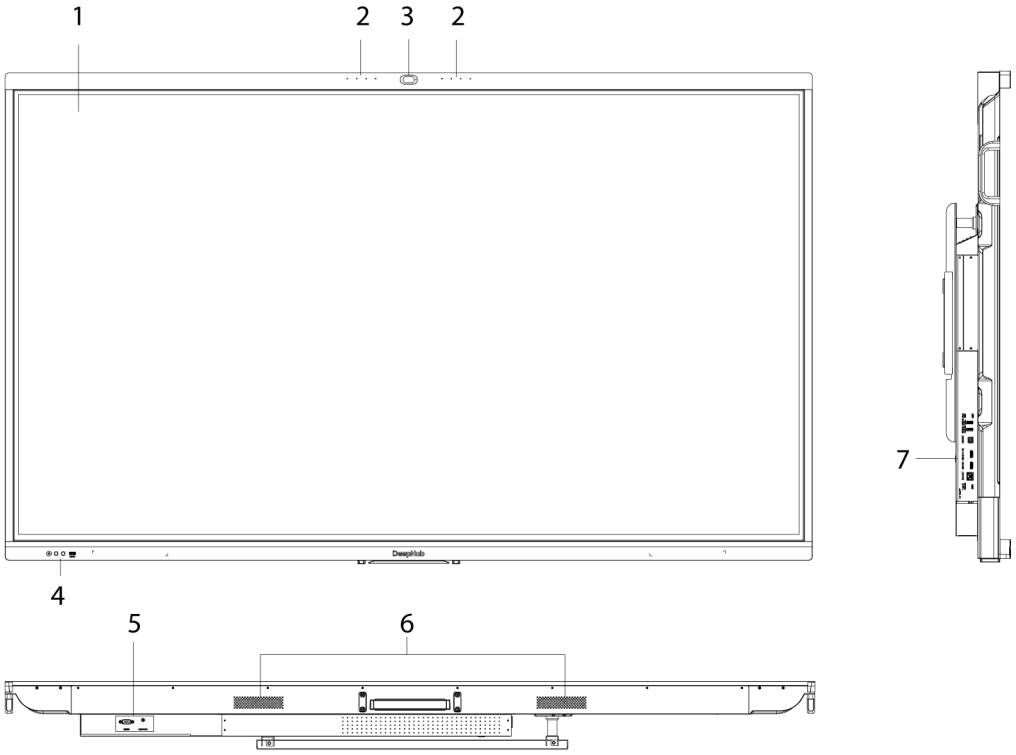

Table 4-1 Appearance description

NO.	Description
1	LCD.
2	Microphones. Pick up live audio.
3	Built-in HD camera.
4	Front panel.
5	Bottom panel.
6	Speaker. Plays multimedia sounds.
7	Left panel.

Front Panel

Figure 4-2 Front panel

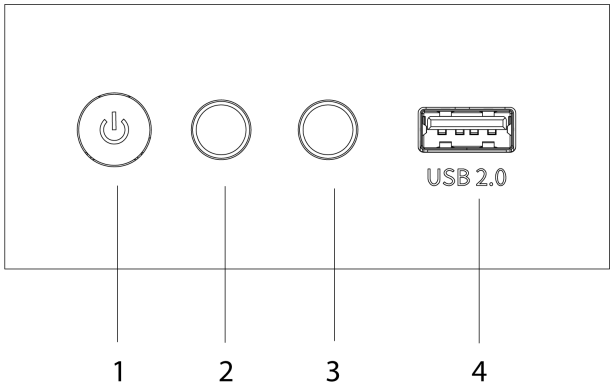

Table 4-2 Description of the front panel

No.	Name	Description
1	Power button	Press and hold it for five seconds to turn off the whiteword. Press it briefly to turn on the whiteword, turn on the screen or turn off the screen.
2	IR sensor	Receives signals from the remote control.
3	Light sensor	The whiteboard recognizes the ambient brightness through the light sensor and automatically adjusts the backlight brightness according to the ambient brightness.
4	USB 2.0	Connects external USB storage devices, mice and so on, and is applicable to the Android system and computer modules.

Left Panel

Figure 4-3 Left panel

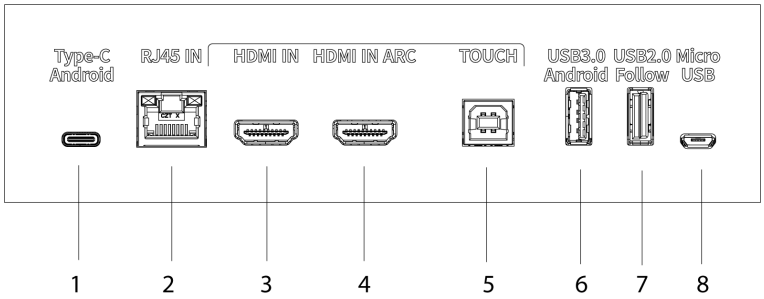

Table 4-3 Description of the left panel

No.	Name	Description
1	Type-C Android	Connects external Type-C USB 2.0 devices. It is applicable to the Android system and can be used to charge external devices such as mobile phones.
2	RJ-45 IN	Network input port. Connects to the network cable to access network.

No.	Name	Description
3	HDMI IN	HD audio and video signal input port. Connects to the computer, set-top box, and other video devices with HDMI output ports. HDMI IN ARC port also supports bidirectional audio communication over a single HDMI cable. To use the ARC function, you need to connect to devices that support ARC.
4	HDMI IN ARC	
5	TOUCH	Connects to a laptop, enabling touch control of the laptop through the whiteboard. It is used in combination with the HDMI IN interface next to it.
6	USB 3.0 Android	Connects external USB storage devices, mice and the like, and is applicable to the Android system.
7	USB 2.0 Follow	Connects external USB storage devices, mice and the like, and is applicable to both the Android system and computer modules.
8	Micro USB	Used to debug the Android system, and is only applicable to the Android system.

Bottom Panel

Figure 4-4 Bottom panel

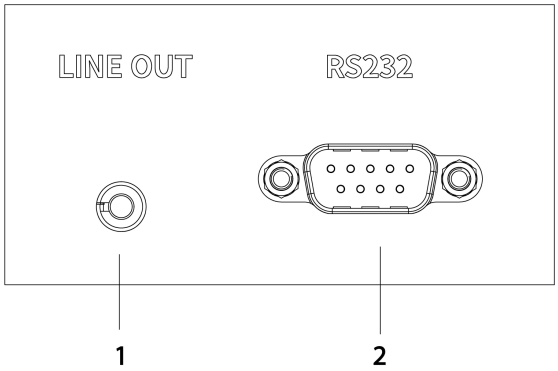

Table 4-4 Description of the bottom panel

No.	Name	Description
1	LINE OUT	An audio output port that connects to the speakers.
2	RS-232	Transmits data between devices. You can connect central control devices to the whiteboard with RS-232 port.

Appendix 1 Touch Operation

You can use the stylus pen or directly use your fingers to operate the device screen.

This section uses operation with stylus pen as an example.

Appendix Table 1-1Touch operations

Operation	Description
Tap	Tap the screen once with the stylus pen.
Double-tap	Tap the screen twice with the stylus pen (The time gap between the taps is around 0.5 s).
Context menu	Slightly touch the screen for 1 to 2 seconds with the stylus pen. Lift the stylus pen when there is a circle on the screen, and then the context menu is displayed.
Drag	Hold the icon that needs to be dragged with the stylus pen, and then move the stylus pen to the target place. Lift the stylus pen to drop the item.
Slide	Hold the screen (such as the slider that is used for the web browser) that you want to slide with the stylus pen, and then slide the stylus pen toward the direction you want. Lift the stylus pen to release the screen.
Zoom	Use the stylus pen to press and hold the window (such as the web pages and images), and then use another stylus pen to drag the window to zoom in and zoom out.

Appendix 2 Security Commitment and Recommendation

Dahua Vision Technology Co., Ltd. (hereinafter referred to as "Dahua") attaches great importance to cybersecurity and privacy protection, and continues to invest special funds to comprehensively improve the security awareness and capabilities of Dahua employees and provide adequate security for products. Dahua has established a professional security team to provide full life cycle security empowerment and control for product design, development, testing, production, delivery and maintenance. While adhering to the principle of minimizing data collection, minimizing services, prohibiting backdoor implantation, and removing unnecessary and insecure services (such as Telnet), Dahua products continue to introduce innovative security technologies, and strive to improve the product security assurance capabilities, providing global users with security alarm and 24/7 security incident response services to better protect users' security rights and interests. At the same time, Dahua encourages users, partners, suppliers, government agencies, industry organizations and independent researchers to report any potential risks or vulnerabilities discovered on Dahua devices to Dahua PSIRT, for specific reporting methods, please refer to the cyber security section of Dahua official website.

Product security requires not only the continuous attention and efforts of manufacturers in R&D, production, and delivery, but also the active participation of users that can help improve the environment and methods of product usage, so as to better ensure the security of products after they are put into use. For this reason, we recommend that users safely use the device, including but not limited to:

Account Management

1. **Use complex passwords**

   Please refer to the following suggestions to set passwords:

   - The length should not be less than 8 characters;
   - Include at least two types of characters: upper and lower case letters, numbers and symbols;
   - Do not contain the account name or the account name in reverse order;
   - Do not use continuous characters, such as 123, abc, etc.;
   - Do not use repeating characters, such as 111, aaa, etc.
2. **Change passwords periodically**

   It is recommended to periodically change the device password to reduce the risk of being guessed or cracked.
3. **Allocate accounts and permissions appropriately**

   Appropriately add users based on service and management requirements and assign minimum permission sets to users.
4. **Enable account lockout function**

   The account lockout function is enabled by default. You are advised to keep it enabled to protect account security. After multiple failed password attempts, the corresponding account and source IP address will be locked.
5. **Set and update password reset information in a timely manner**

   Dahua device supports password reset function. To reduce the risk of this function being used by threat actors, if there is any change in the information, please modify it in time. When setting security questions, it is recommended not to use easily guessed answers.

Service Configuration

1. **Enable HTTPS**

   It is recommended that you enable HTTPS to access Web services through secure channels.
2. **Encrypted transmission of audio and video**

   If your audio and video data contents are very important or sensitive, we recommend you to use encrypted transmission function in order to reduce the risk of your audio and video data being eavesdropped during transmission.
3. **Turn off non-essential services and use safe mode**

   If not needed, it is recommended to turn off some services such as SSH, SNMP, SMTP, UPnP, AP hotspot etc., to reduce the attack surfaces.

   If necessary, it is highly recommended to choose safe modes, including but not limited to the following services:

   - SNMP: Choose SNMP v3, and set up strong encryption and authentication passwords.
   - SMTP: Choose TLS to access mailbox server.
   - FTP: Choose SFTP, and set up complex passwords.
   - AP hotspot: Choose WPA2-PSK encryption mode, and set up complex passwords.
4. **Change HTTP and other default service ports**

   It is recommended that you change the default port of HTTP and other services to any port between 1024 and 65535 to reduce the risk of being guessed by threat actors.

Network Configuration

1. **Enable Allow list**

   It is recommended that you turn on the allow list function, and only allow IP in the allow list to access the device. Therefore, please be sure to add your computer IP address and supporting device IP address to the allow list.
2. **MAC address binding**

   It is recommended that you bind the IP address of the gateway to the MAC address on the device to reduce the risk of ARP spoofing.
3. **Build a secure network environment**

   In order to better ensure the security of devices and reduce potential cyber risks, the following are recommended:

   - Disable the port mapping function of the router to avoid direct access to the intranet devices from external network;
   - According to the actual network needs, partition the network: if there is no communication demand between the two subnets, it is recommended to use VLAN, gateway and other methods to partition the network to achieve network isolation;
   - Stablish 802.1x access authentication system to reduce the risk of illegal terminal access to the private network.

Security Auditing

1. **Check online users**

   It is recommended to check online users regularly to identify illegal users.
2. **Check device log**

By viewing logs, you can learn about the IP addresses that attempt to log in to the device and key operations of the logged users.

3. **Configure network log**

   Due to the limited storage capacity of devices, the stored log is limited. If you need to save the log for a long time, it is recommended to enable the network log function to ensure that the critical logs are synchronized to the network log server for tracing.

Software Security

1. **Update firmware in time**

   According to the industry standard operating specifications, the firmware of devices needs to be updated to the latest version in time in order to ensure that the device has the latest functions and security. If the device is connected to the public network, it is recommended to enable the online upgrade automatic detection function, so as to obtain the firmware update information released by the manufacturer in a timely manner.

2. **Update client software in time**

   We recommend you to download and use the latest client software.

Physical Protection

It is recommended that you carry out physical protection for devices (especially storage devices), such as placing the device in a dedicated machine room and cabinet, and having access control and key management in place to prevent unauthorized personnel from damaging hardware and other peripheral equipment (e.g. USB flash disk, serial port).

ENABLING A SMARTER SOCIETY AND BETTER LIVING

ZHEJIANG DAHUA VISION TECHNOLOGY CO., LTD.
Address: No. 1399, Binxing Road, Binjiang District, Hangzhou, P. R. China | Website: www.dahuasecurity.com | Postcode: 310053
Email: dhoverseas@dhvisiontech.com | Tel: +86-571-87688888 28933188