DHI-LPH86-ST470-C-S3

86 inch Smart interactive whiteboard

Series Overview

Dahua DeepHub Intelligent Interactive Tablet features a powerful multi-core CPU with various ROM storage capacities. It comes equipped with a 4K DLED LCD display and utilizes advanced infrared touch technology for precise interaction and a smooth writing experience. Additionally, it comes with a variety of functions such as wireless screen sharing and file management, offering a multimedia solution for modern teaching environments.

Technical Specification

Built-in System

Operating System	Android 16.0
CPU	Quad-core A53 + quad-core A72
CPU Frequency	Main frequency 2.2 GHz
GPU	Mali-G52 MC3
RAM	8 GB
ROM	128 GB

General

Operating System of External Module	Windows 11; Android
Power Supply	100–240 VAC, 50/60 Hz
Power Consumption	135 W (basic), 400 W (max)
Standby Power Consumption	≤0.5 W
Operating Temperature	0 °C to +40 °C (+32 °F to +104 °F)
Storage Temperature	–20 °C to +60 °C (–4 °F to +140 °F)

- Supports 4K ultra-high-definition display with a 4K UI.
- Equipped with 2 built-in mid-high frequency speakers; supports 2.0 sound channel audio output, with a total speaker power of 40 W.
- Produces vibrant and vivid visual effects through its high color gamut (90% NTSC high color gamut screen), high color accuracy (ΔE ≤ 1.5), and brightness of 400 cd/m².
- Supports one-click screen sharing from mobile phones, computers, tablets, etc., and multi-screen split display function.
- Supports various office software such as Office and audio/video file playback.
- Smooth writing: supports handwriting and stylus input, with fast writing response speed, and supports pen-tip pressure sensitivity for a realistic writing experience.
- Supports smart text and smart graphics.
- Supports smart pen pick-up detection, automatically wakes up annotations and whiteboard when the pen is lifted, enabling quick entry into writing mode.
- BYOM: Supports using the whiteboard camera and microphone via TYPE-C IN and screen mirroring device.
- Supports card swipe for unlocking and account login.
- Supports all-featured TYPE-C IN.
- Supports HDMI IN ARC.

Operating Humidity	0%–93%, 101 kPa
Storage Humidity	0%–93%, 101 kPa
Protection	IP20
Product Material	Metal casing
Glass	3 mm anti-dazzle tempered glass
Casing Color (Frame/Rear)	Black on the left and right, dark blue on the top and bottom
Product Dimensions	1,953.8 mm × 115.7 mm × 1,205.9 mm (76.92" × 4.56" × 47.48")
Frame Size	Top frame: 40.9 mm (1.61"); Left and right frame: 17.5 mm (0.69"); Bottom frame: 65.3 mm (2.57")
Packaging Dimensions	2,090.0 mm × 227.0 mm × 1,315.0 mm (82.28" × 8.94" × 51.77") (L × W × H)
Net Weight	61.7 kg (136.03 lb)
Gross Weight	74.0 kg (163.14 lb)
Holes Distance	800 mm × 400 mm (31.50" × 15.75")
Installation	Wall mount or mobile bracket

Packing List	1 × Smart Display 2 × Stylus Pen 1 × Wall Mount Bracket 1 × Global Laws and Regulations Manual 1 × Wireless Plug-in Module 1 × Power Cord 1 × Quick Start Guide 1 × Expansion Tube and Expansion Screw Set 1 × Remote Control

LCD Panel

Screen Size	86 inch
Backlight	DLED
Aspect Ratio	16:9
Brightness	400 cd/m²
Static Contrast Ratio	1500:1
Resolution	3840 (H) × 2160 (V)
Viewing Angle	178° (H)/178° (V)
Lifespan	≥30,000 hrs
Display Color	90% NTSC
Response Time	≤8 ms
Refresh Rate	60 Hz

Device Ports

Light Sensor	1
Front Button	8 buttons: Custom Volume - Volume + Curtain Touch lock Signal source Home Power supply
Front Ports	1 × TYPE-C port 2 × USB 3.0 port 1 × HDMI IN port 1 × Touch port
Rear Port	1 × HDMI OUT port 2 × HDMI IN ports 2 × Touch ports 1 × USB 2.0 port 2 × RJ-45 ports 1 × Type-C IN port 1 × DP IN port 2 × USB 3.0 port
SD Card Slot	1 × SD card slot, up to 512 GB
Others	1 × SPDIF OUT port 1 × RS-232 port 1 × LINE OUT port 1 × LINE IN port 1 × VGA AUDIO IN port 1 × VGA IN port 1 × Touch port
Wi-Fi	Yes
Wi-Fi Standard	802.11b/g/n/a/ac/ax
Wi-Fi Frequency Range	2400-2483.5 MHz，5150-5350 MHz，5470-5725 MHz，5725-5850 MHz
MAX Power Transmission (Wi-Fi)	≤20 dBm@2400-2483.5 MHz； ≤23 dBm@5150-5250 MHz； ≤20 dBm@5250-5350 MHz； ≤27 dBm@5470-5725 MHz； ≤14 dBm@5725-5850 MHz
Bluetooth	Yes
Bluetooth Standard	BR/EDR/BLE (Bluetooth mode), BT5.4
Bluetooth Frequency Range	2400-2483.5 MHz
MAX Power Transmission (Bluetooth)	≤20 dBm@2400-2483.5 MHz；
RFID Modulation Method	ASK
RFID Frequency Range	13.56 MHz
MAX Power Transmission (RFID)	13.56 MHz: 42 dBuA/m @10 m

Function

IR Receiver	1
NFC	1 × NFC
Wireless Access Point	Wi-Fi 6, 2.4 GHz/5 GHz; supports 802.11a/b/g/n/ac/ax

Touchscreen

Response Time	≤1.67 ms
Touch Technology	Infrared
Attachment Method	Zero Air Gap
Touch Points	Android: 50 points Windows: 50 points
Touch Accuracy	±0.5 mm (covers 90% of the area)
Valid Touch	1.5 mm (0.06")
Writing Mode	Finger and stylus pen (magnetic)
Communication Mode	USB
Anti-light Interference	Anti-dazzle tempered glass
Surface Hardness	≥9H
Touch Resolution	32767 × 32767

Speaker

Built-in Speaker	2 mid-high frequency speakers
Power	2.0 sound channel, front-end 2 × 20 W
Frequency	150 Hz–20 kHz

Microphone

Microphone	8 arrays
Pick-up Distance	0.5 m-8 m (1.64 ft–26.25 ft) pickup
AGC	Yes
Echo Cancellation	Yes
Polar Pattern	Omnidirectional
Intelligent Noise Filtering	Yes

Certification

Certifications	CE, CB, EDLA

Ordering Information

Type	Model	Description
Smart interactive whiteboard	DHI-LPH86-ST470-C-S3	86 inch Smart interactive whiteboard

Installation

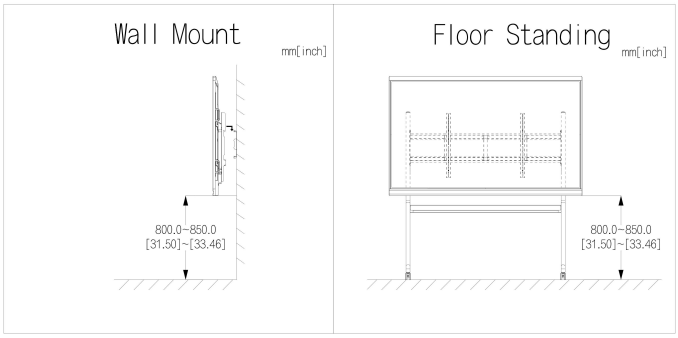

Dimensions (mm[inch])

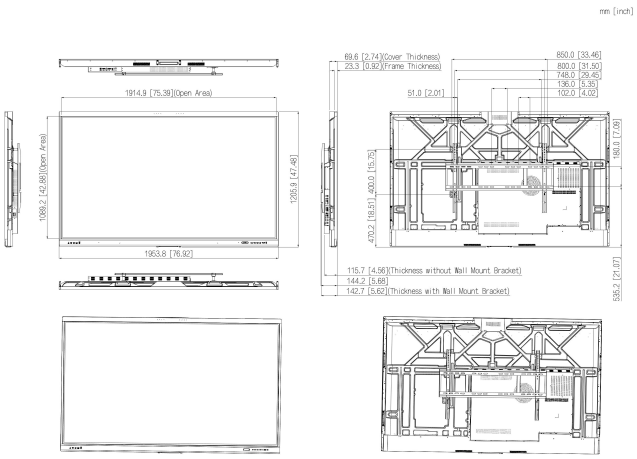

Panels

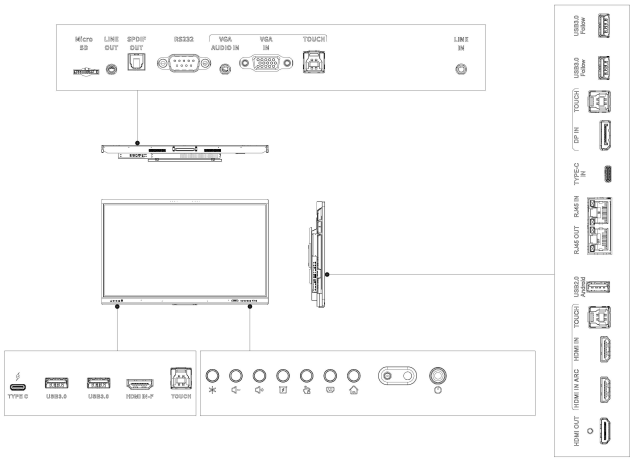

©Dahua. All rights reserved. Design and specifications are subject to change without notice.
Pictures in the document are for reference only, and the actual product shall prevail.