EASYCONNECT™

INSTALLATION AND SETUP GUIDE

MPX 250™

BYOM COLLABORATION SWITCHING SYSTEM

ACCESSORIES

The EasyConnect MPX 250 EXT 30 wall-side connection box is available for purchase separate from the MPX 250 (available July 2025).

- The EasyConnect MPX 250 EXT 30 comes with a 30ft (10 meter) USB-C active optic extension to connect the table-side MPX 250 with a wall-side system extension option.

PRODUCT INFORMATION SOURCES

- For product specifications for the MPX 250, MPX 250 EXT 30, MPX 250 DCS including USB port information, please see the product data sheets on biamp.com: biamp.com Downloads
- This guide covers installing and setting up the MPX 250 as well as the separately purchased MPX 250 EXT 30.
- Additional information on these products can be found on Biamp's Cornerstone technical support knowledge base: Cornerstone EasyConnect MPX 250s

INSTALLATION CONSIDERATIONS

- The MPX 250 is designed for table-side conference space installations with most of the system installed underneath the table.
- The MPX 250 mounting system's cable passthrough cylinder is designed for installation in a tabletop. This provides users access to USB-C connection cables running from the MPX 250 through the tabletop to users' laptops or other BYOM devices.
- The MPX 250 EXT accessory wall-side connection box is intended for wall-side installations
- MPX 250 Link accessory cable considerations (comes with the MPX 250 EXT).
  - The cable is uni-directional. Always use the included electronics module. The module maintains USB video signal integrity over the length of the cable.
  - Avoid unnecessary sharp bends in the cable's route (greater than a 50mm radius).
  - The Kevlar-reinforced cable supports a maximum pull forces of 156 Nm / 16 Kg.
- Do not exceed the maximum ambient operating temperature of 32-104° F (0-40° C).

REQUIRED INSTALLATION TOOLS

One qualified person can typically install these products by themselves.

- A pencil for marking the locations where the MPX 250 or MPX 250 EXT will be installed.
- A screwdriver or drill bit and drill.
- MPX 250 only: A drill with a 75mm diameter hole saw attachment for installing the touch controller in a tabletop or desktop.

NOT INCLUDED

- 14 screws or other fasteners appropriate for the surfaces you will be attaching the MPX 250 to.
- The MPX 250 EXT will require 6 fasteners to install.
- Very High Bond (VHB) tape may be used in place of screws to attach components to a hard table surface. For example, use VHB tape to attach a component to a granite table.

INCLUDED IN THE BOX

MPX 250 MAJOR COMPONENTS OVERVIEW

Standard MPX 250 kit

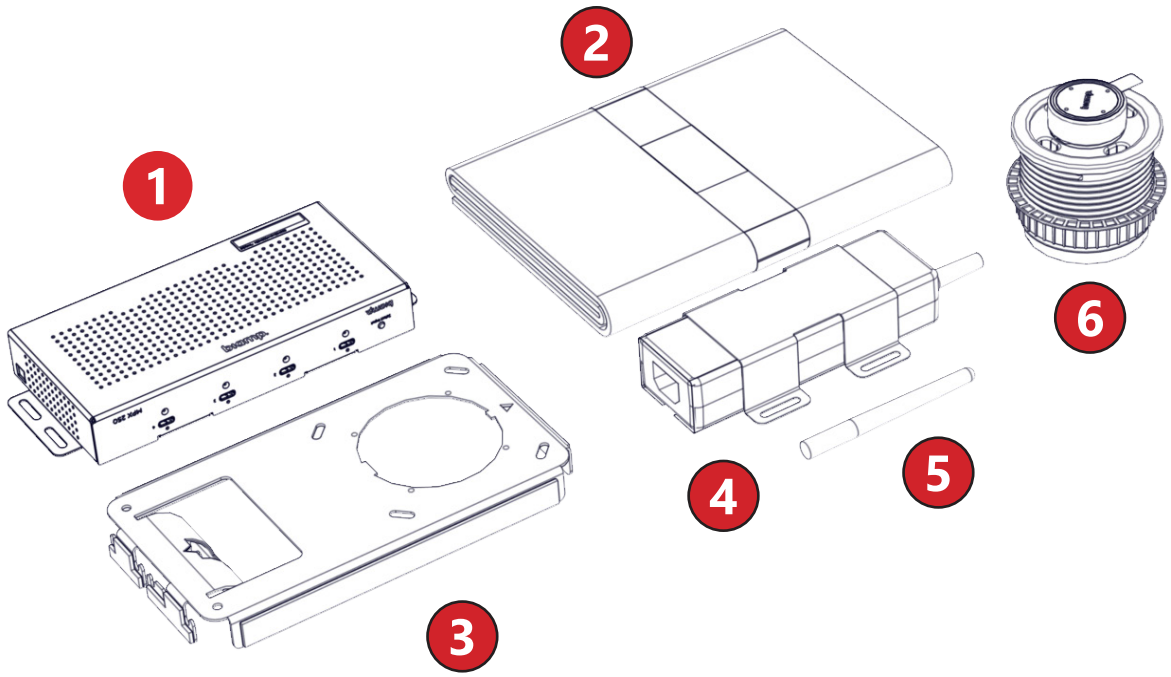

1. MPX 250
2. Mounting system cable management bag
3. Mounting system cable management bracket
4. Power supply and cable
5. WiFi antenna
6. Touch controller with mounting system cable pass-through cylinder

MPX 250 SUB-COMPONENTS

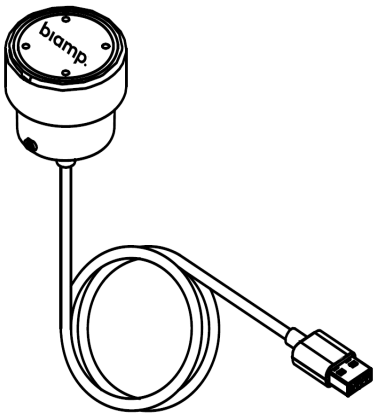

Touch controller

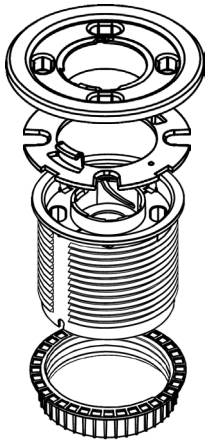

Mounting system pass-through cylinder

MPX 250 Sub-Components (Continued)

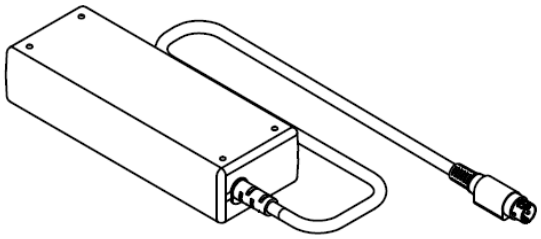

Power supply

Regional prower cord

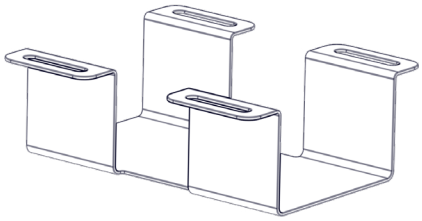

Power supply mounting bracket

Cable array balance weights

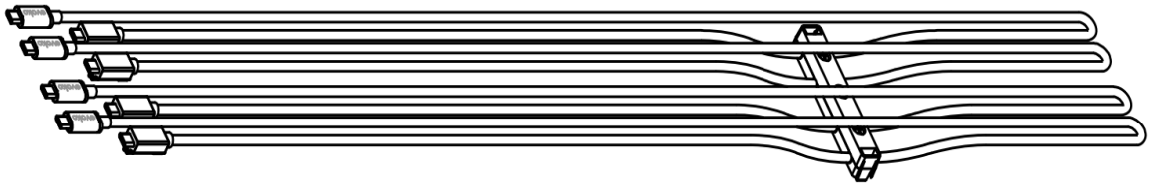

Cable array (4 USB-C to USC-C cables and management bracket)

MPX 250 EXT 30 MAJOR COMPONENTS OVERVIEW

MPX 250 EXT Link 30 accessory wall-side connection box

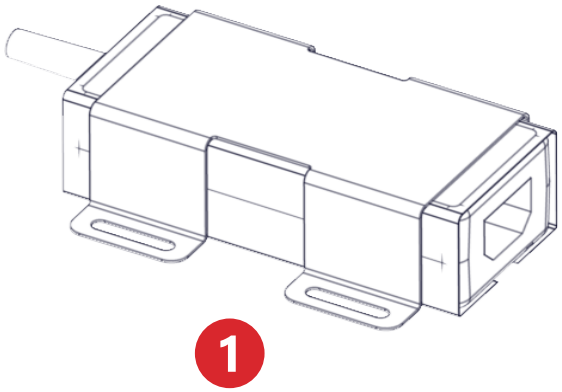

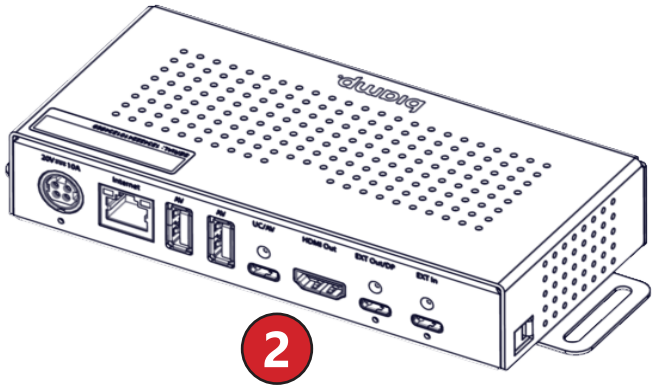

1. **Power Supply**
2. **MPX 250 EXT**
3. **MPX 250 Link 30 Active Optic Extension cable (USB-C to USB-C)**

MPX 250 EXT SUB-COMPONENTS

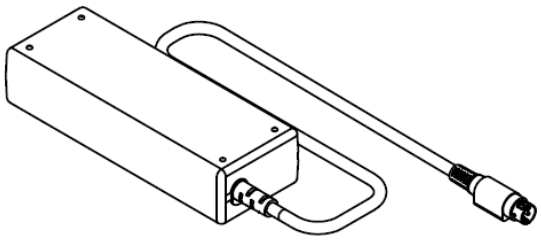

Power supply

Regional power cord

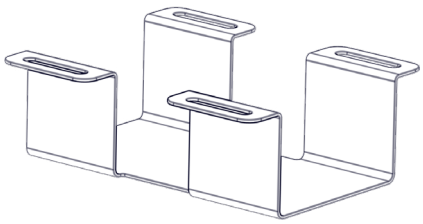

Power supply mounting bracket

MPX 250 DCS MAJOR COMPONENTS OVERVIEW

MPX 250 DCS kit

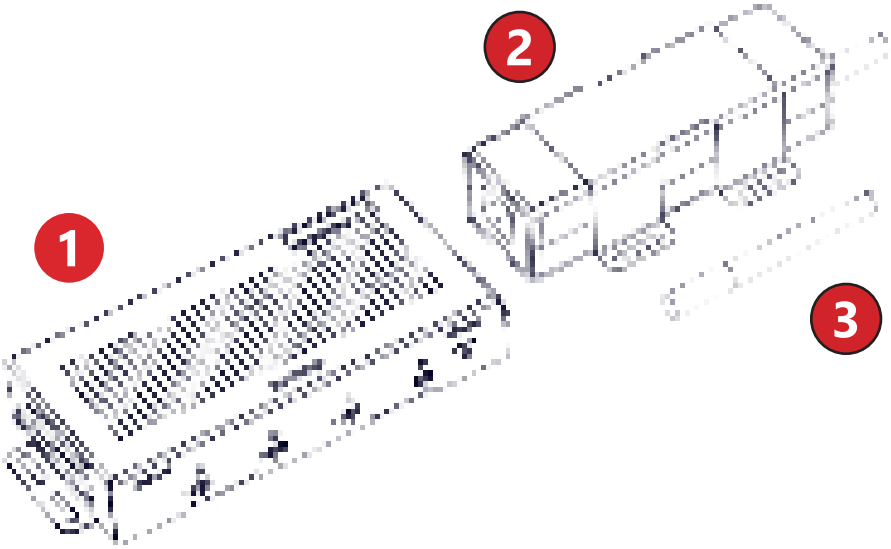

1. **MPX 250**
2. **Power supply and cable**
3. **WiFi antenna**

MPX 250 DCS SUB-COMPONENTS

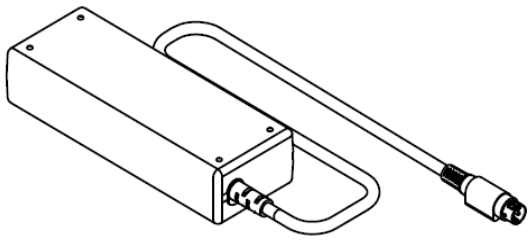

Power supply

Regional power cord

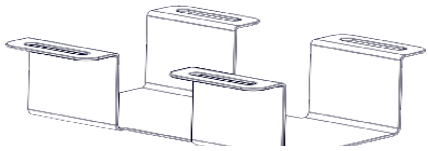

Power supply mounting bracket

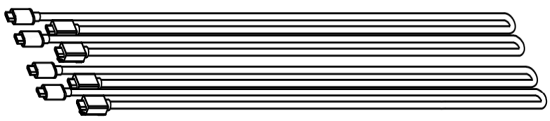

4 USB-C to USB-C cables

MPX 250 DEVICE LAYOUT

FRONT PANEL

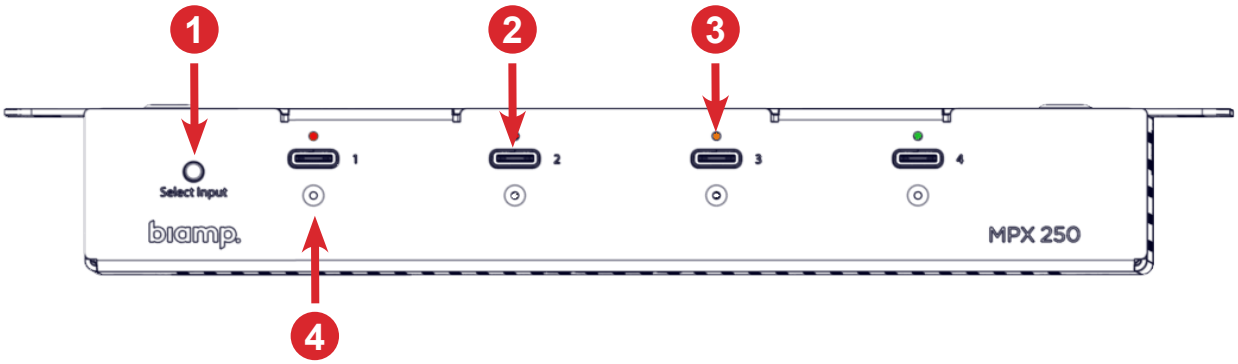

1. **Input select switch**
2. **x4 USB-C ports**
3. **x4 port status indicator LEDS**
4. **x4 M2 locking screws for securing connected USB-C cables**

Indicator LED colors

- Green: Port active. Green blinking, Configuration mode active
- Orange: Only video active. Orange blinking, only video active
- Red: Device connected and active

REAR PANEL

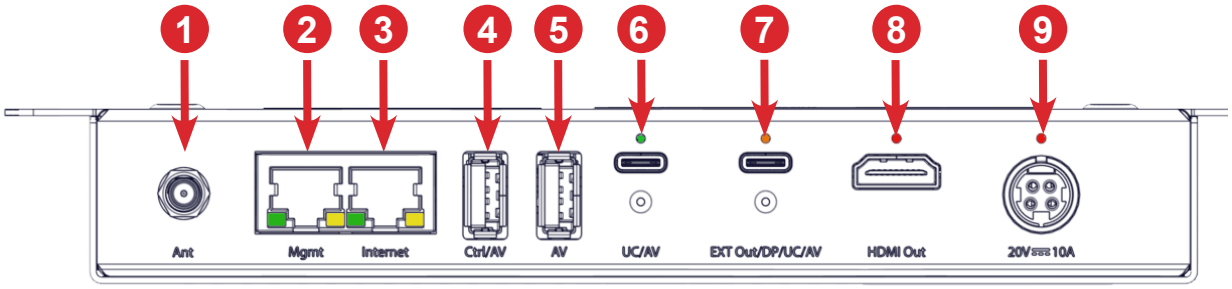

1. **WiFi antenna attachment point**
2. **Ethernet port - MPX 250 management**
3. **Ethernet port - USB-C LAN sharing**
4. **USB-A port - Control / Audiovisual***
5. **USB-A port - Audiovisual**
6. **USB-C UC / Audiovisual port with LED indicator and locking screw**
7. **USB-C Extension Out / DP / UC / AV port with LED indicator and locking screw****
8. **HDMI Video Out port**
9. **DC Power input port**

*The tabletop Touch Controller connects to this port in most setups.
**Use this port when connecting to an MPX 250 EXT with an MPX 250 Link 30 extension cable.

MPX 250 EXT DEVICE LAYOUT

FRONT PANEL

REAR PANEL

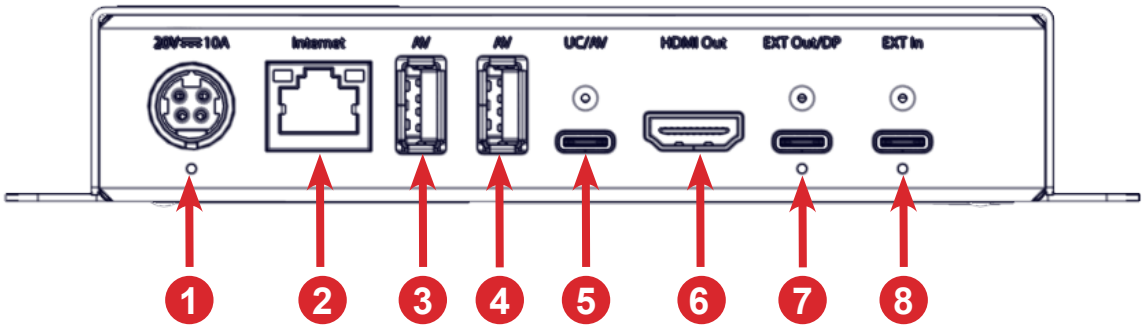

1. DC 20V, 10A power input port
2. RJ45 Ethernet port. Provides Ethernet sharing via USB-C ports
3. USB-A pass-through port
4. USB-A pass-through port
5. USB-C dual-role UC/AV port with locking screw and LED status indicator
6. HDMI Output port USB-C input port with M2 locking screw and LED status indicator
7. USB-C Extension Out / DP port with M2 locking screw and LED status indicator
8. USB-C Extension In port with M2 locking screw and LED status indicator*

*Use this port when connecting to an MPX 250 using the MPX 250 Link 30 extension cable.

MPX 250 EXT CABLE LAYOUT

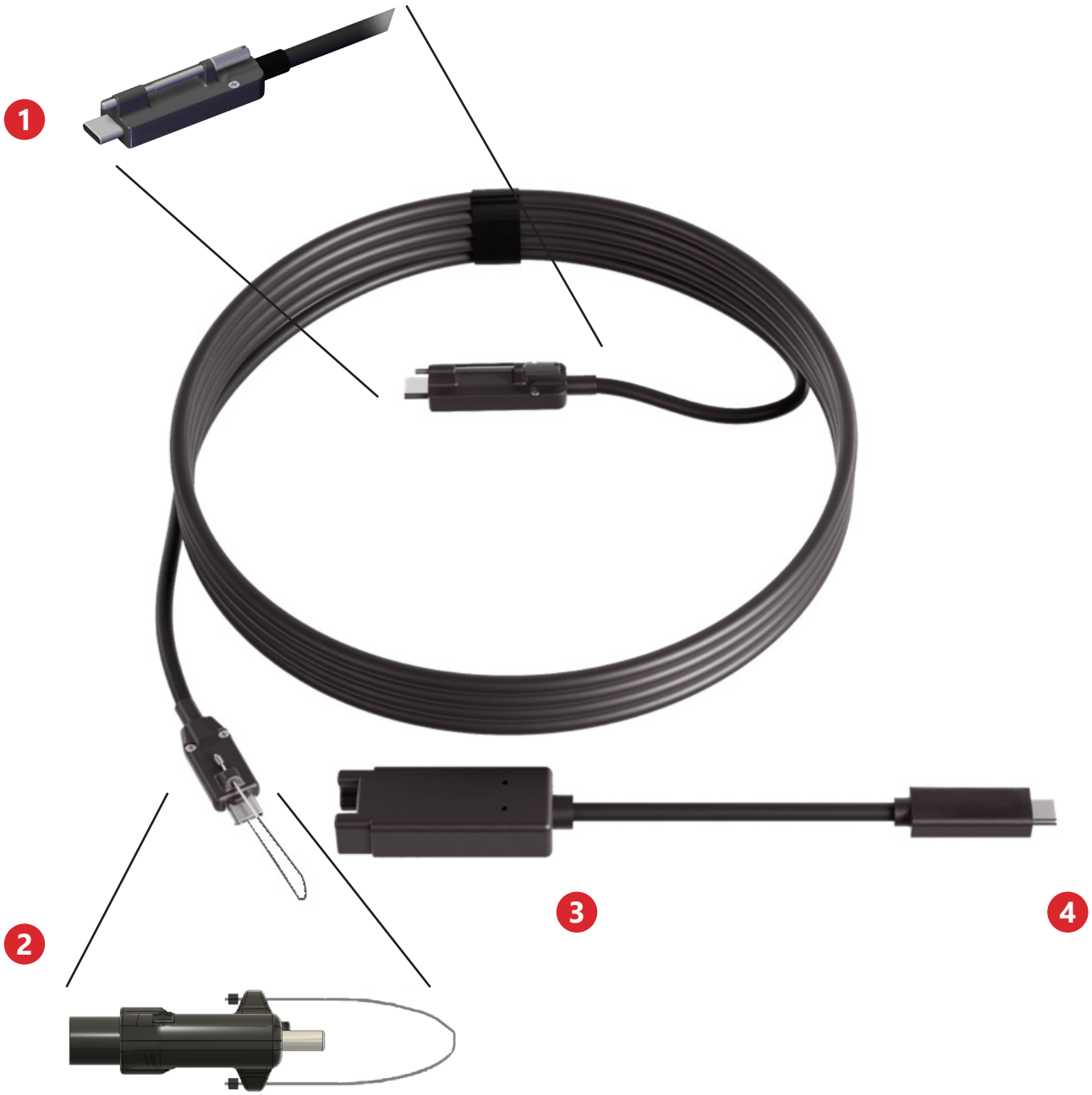

1. **MPX 250 Link 30 Cable - Secure End with M2 locking screw. Connects to the MPX 250 Extension Out USB-C port (EXT Out/DP/UC/AV).**
2. **MPX 250 Link 30 Cable - Pull End with pull cable attachment point. Connects to the Link 30 Electronic Module.**
3. **MPX 250 Link Electronic Module - Connects to the Pull End of the Link 30 cable.**
4. **MPX 250 Link Electronic Module - USB-C Connector End. Connects to the MPX 250 EXT Extension In USB-C port (EXT In).**

MPX 250 TABLETOP INSTALLATION

INSTALLATION OVERVIEW

An end-state example of an under-table installation of the MPX 250 and the accessories that come with it in the box.

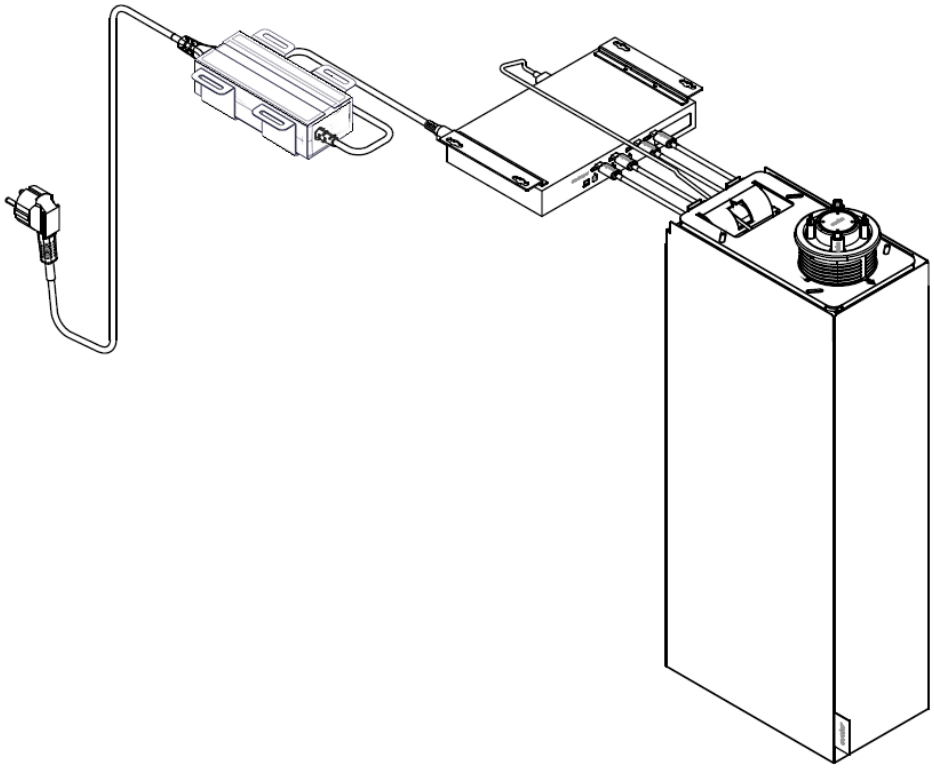

INSTALLATION PROCEDURE

1. Select, measure, and mark the position on the table or desktop where you will drill the 75 mm hole for installing the MPX 250 mounting system touch controller and cable passthrough cylinder in the table.

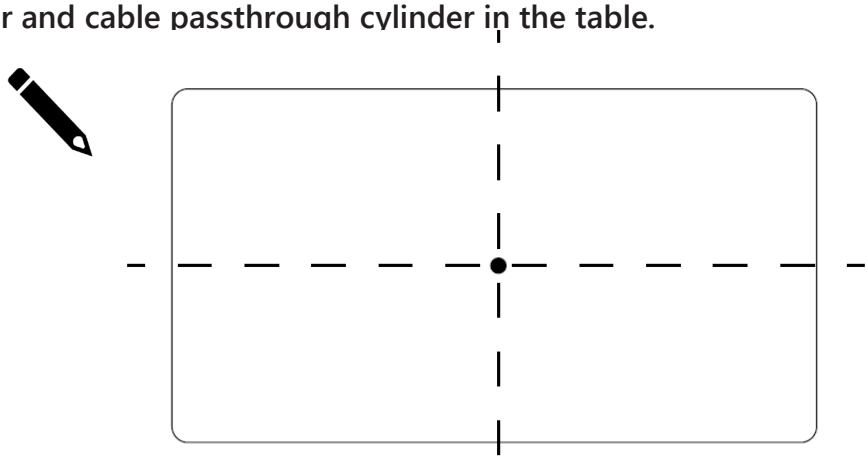

2. Verify there is sufficient free space beneath the table to install the mounting system's cable-management bracket.

- In this example, the selected site is blocked by a support on the bottom center of the table

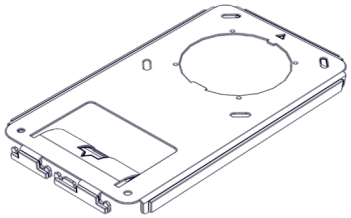

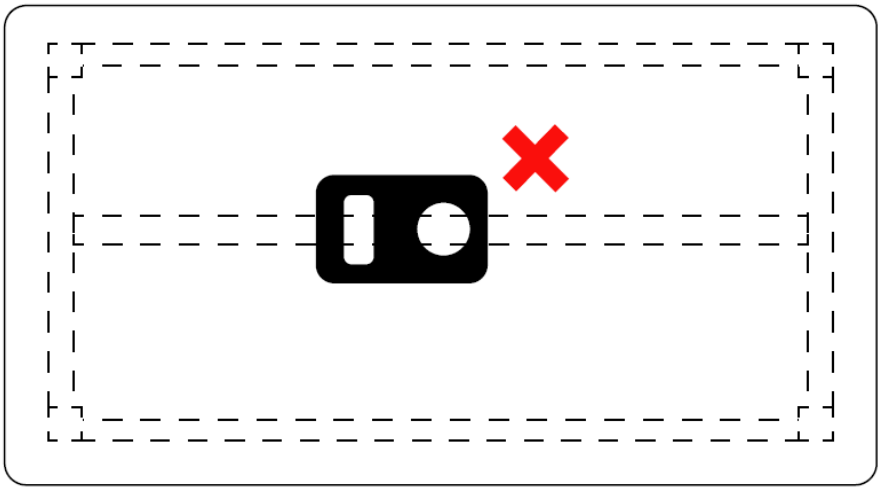

3. Drill through the tabletop using a 75mm hole saw.

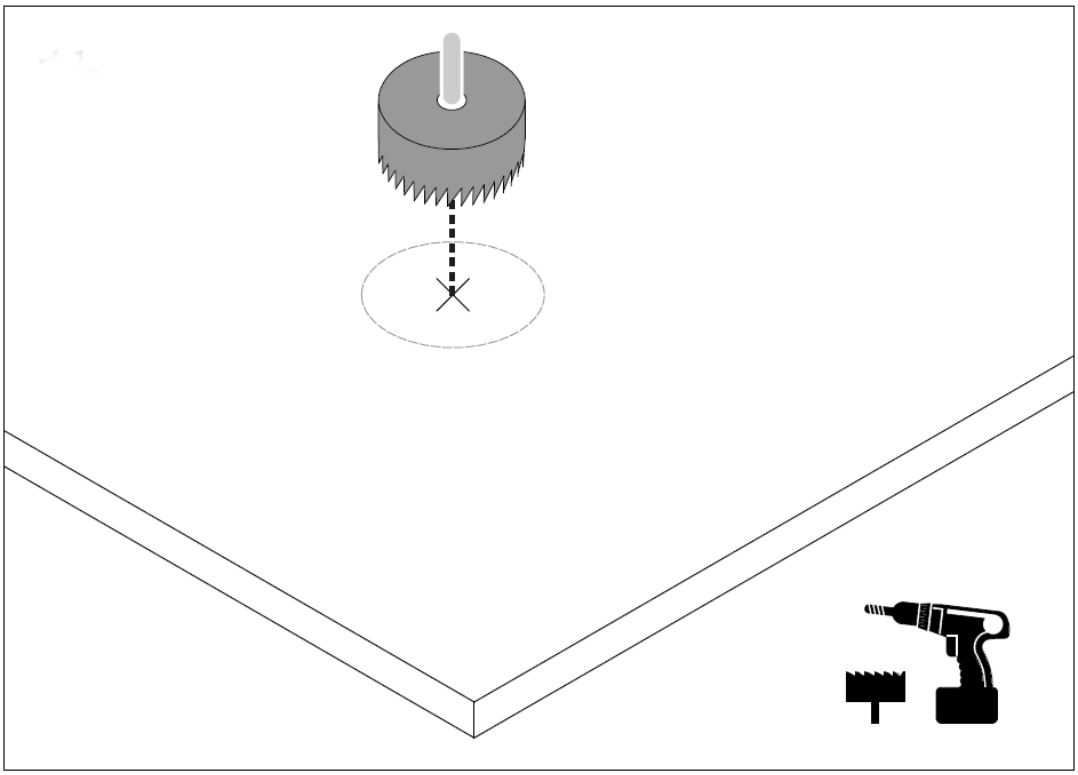

4. Remove the touch controller from the pass-through cylinder, then remove the 2 removable cable-management rings from the top of the cylinder and the locking washer from its bottom.

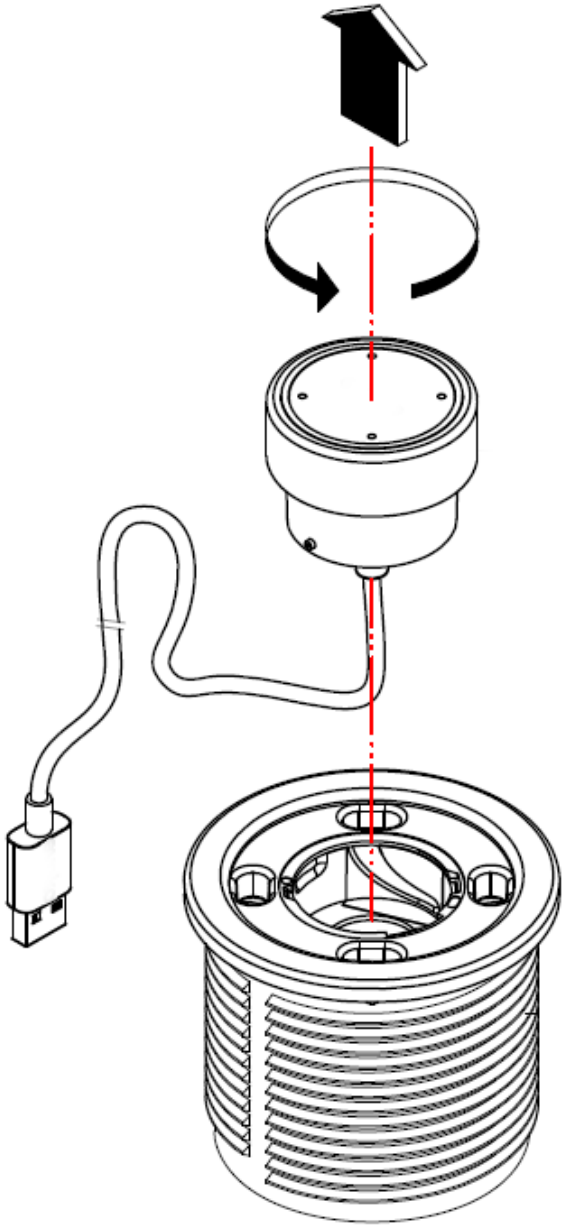

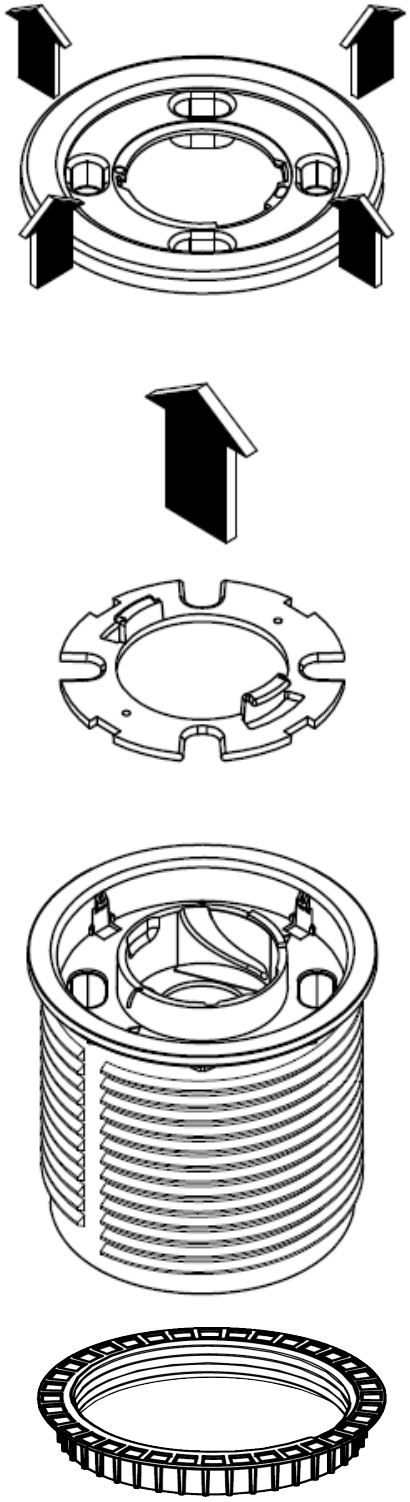

5. Insert the pass-through cylinder into the hole from the top of the table. Position the cylinder so that none of the USB-C cable pass-through holes are aligned toward the primary monitor or screen that meeting participants will view during meetings.

- The USB-C cables that will pass through these holes are intended to connect to meeting participants' laptops.
- Position the holes so the cables will run directly to seats that will best accommodate participants' lines of sight to the monitor or screen.

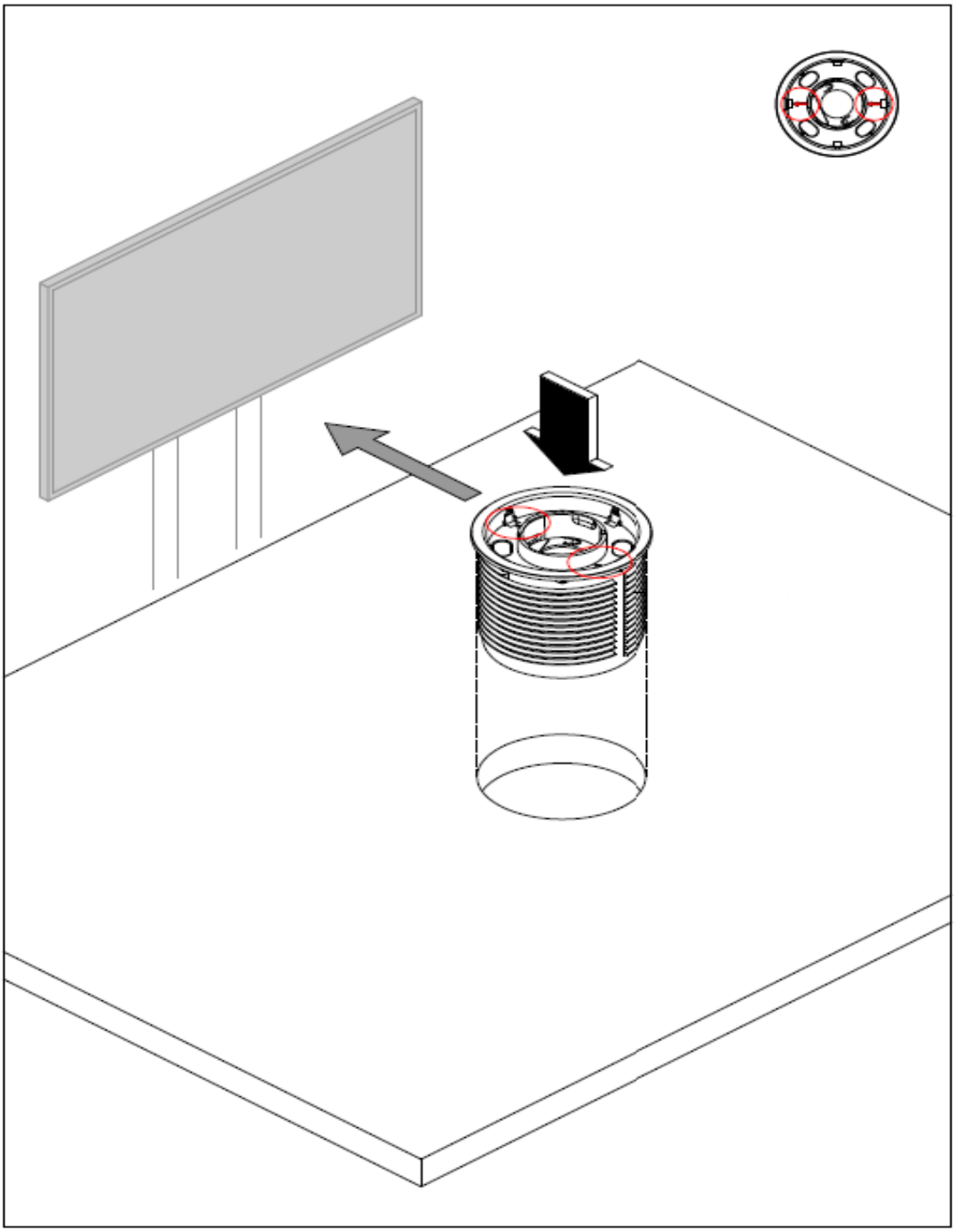

6. Position the cable management bracket on the bottom of the table with the pass-through cylinder in its hole on the bracket.

- Do not secure with screws at this time.

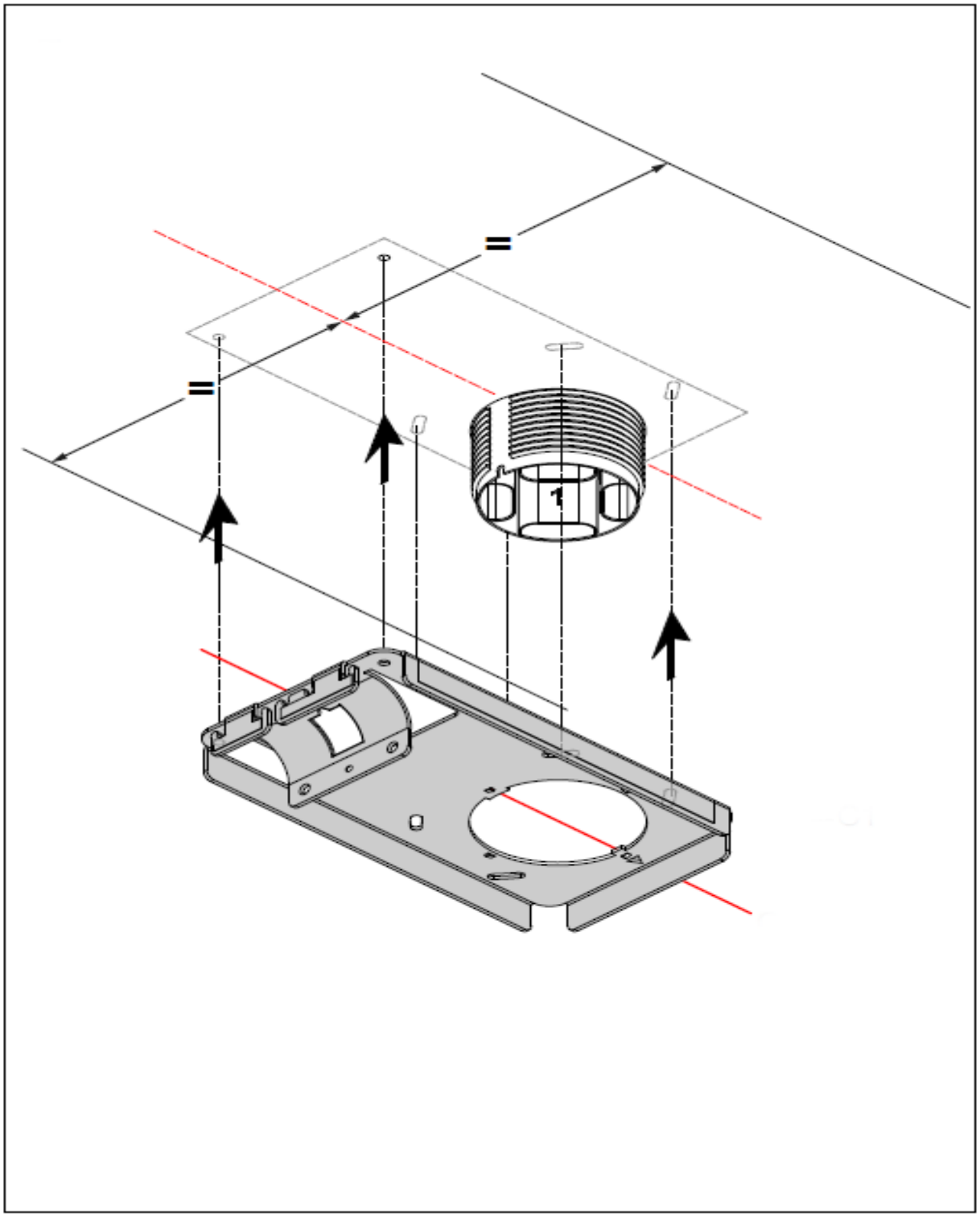

7. Secure the pass-through cylinder in place by screwing on the cylinder's locking washer ring.

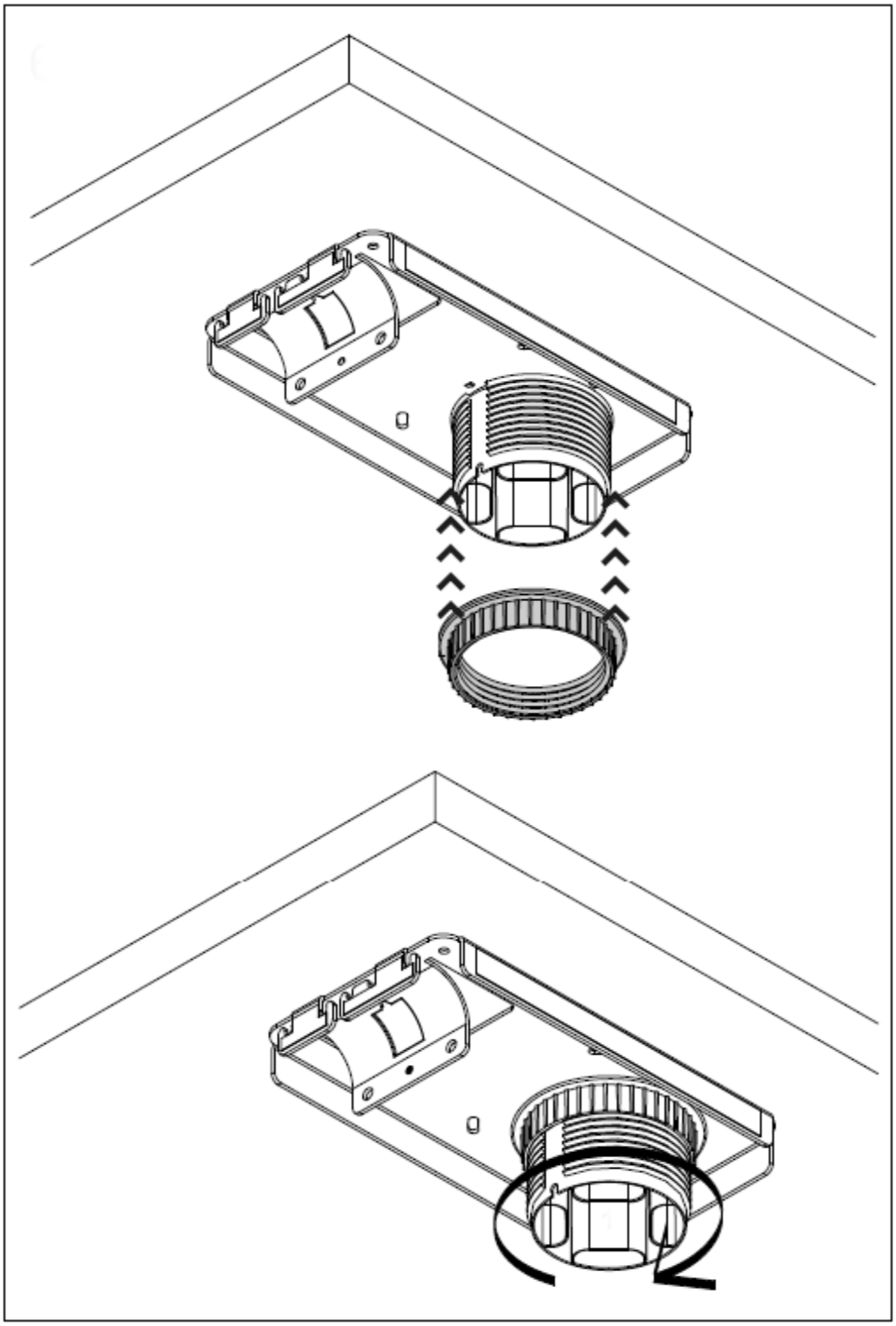

8. Secure the mounting bracket in place by using 6 screws or another fasteners appropriate to the table's material such as, VHB tape.

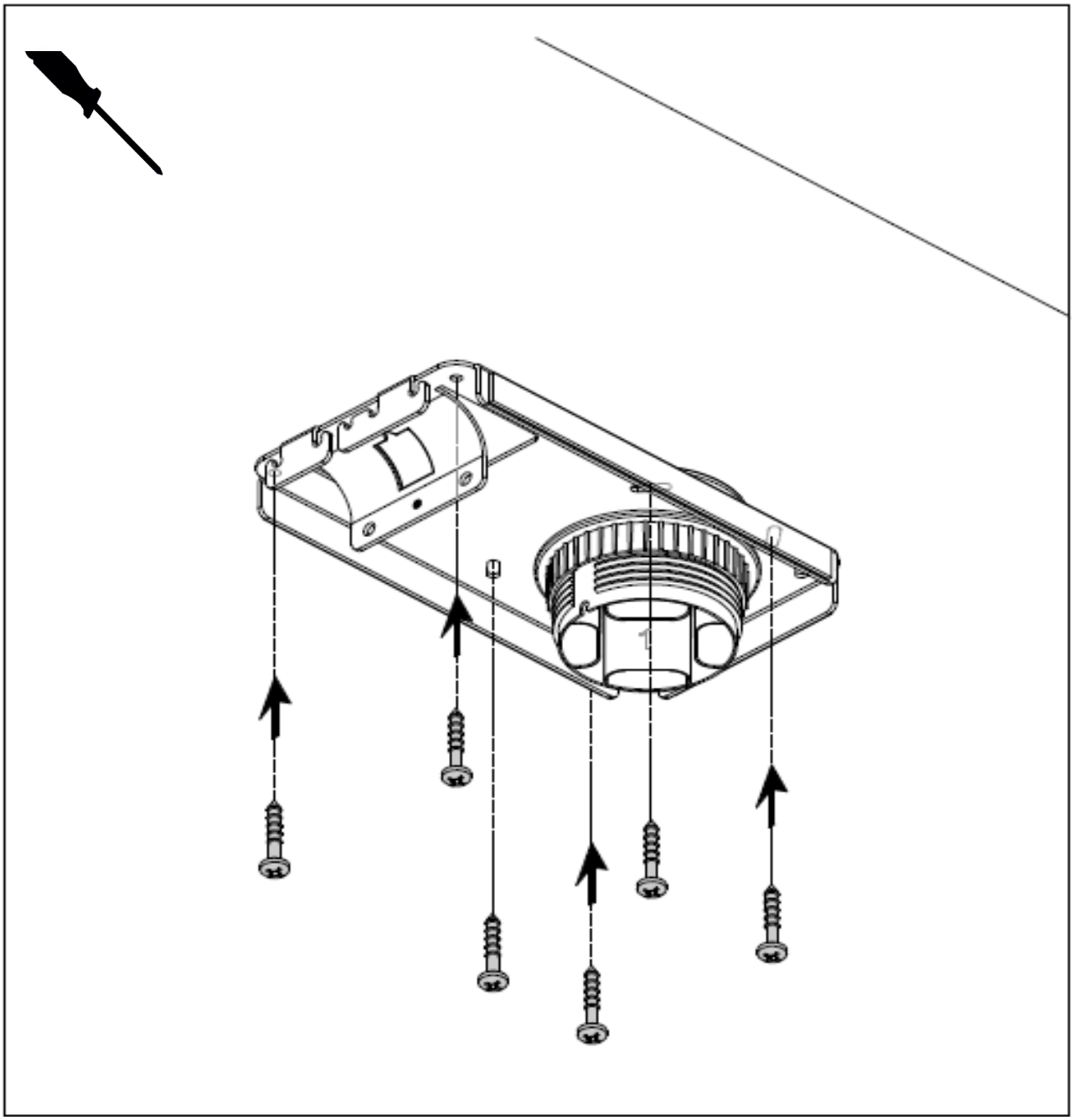

9. Attach the cable array bracket to the mounting system's cable-management bracket. Secure it using a screw in the middle of the cable array bracket.

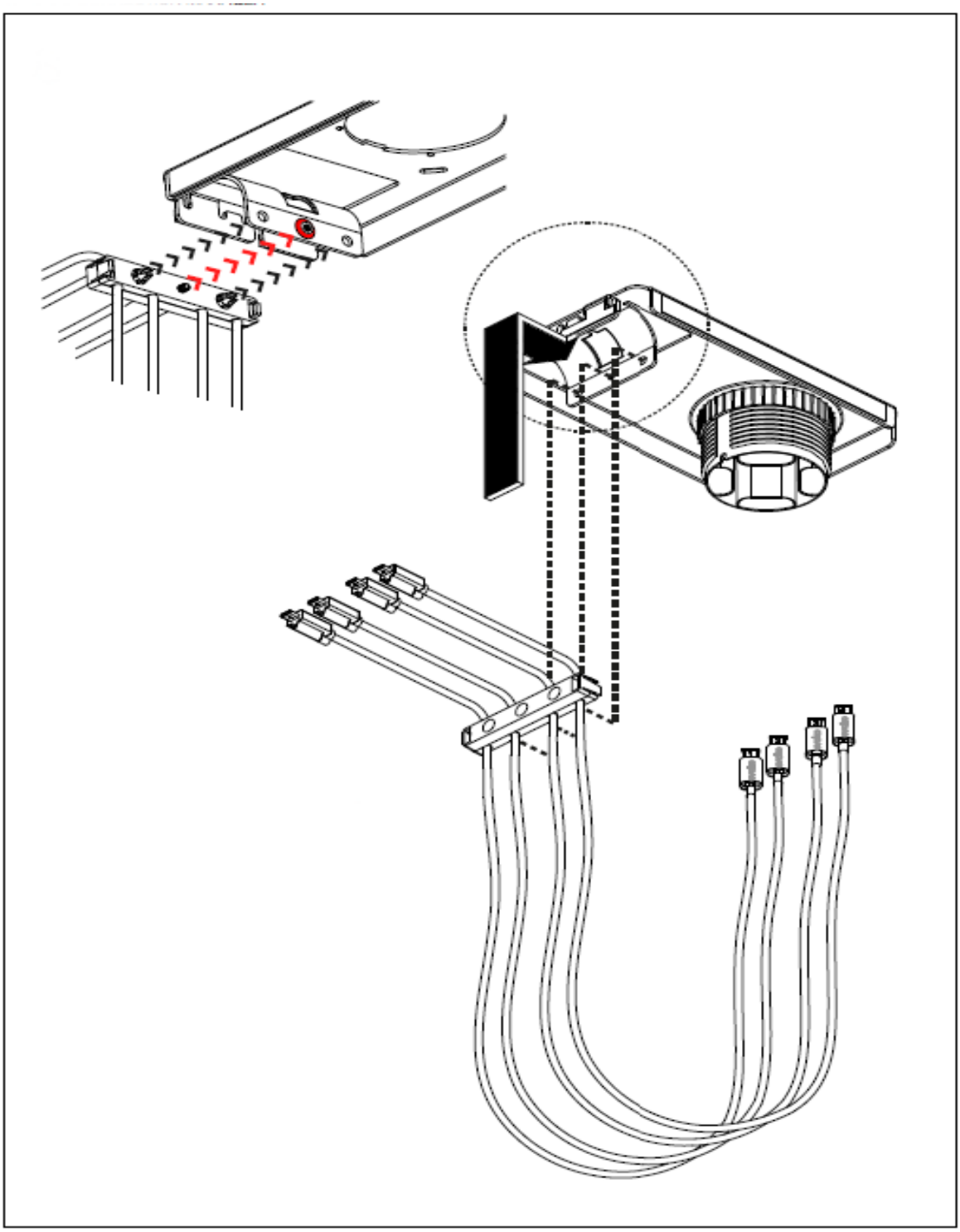

10. Hang 1 cable balance weight on each of the cable array's USB-C cables, then pull the cables through the mounting system cylinder's pass-through holes.

- The weights assist the cables in retracting smoothly below the table after a user disconnects them from their laptop.

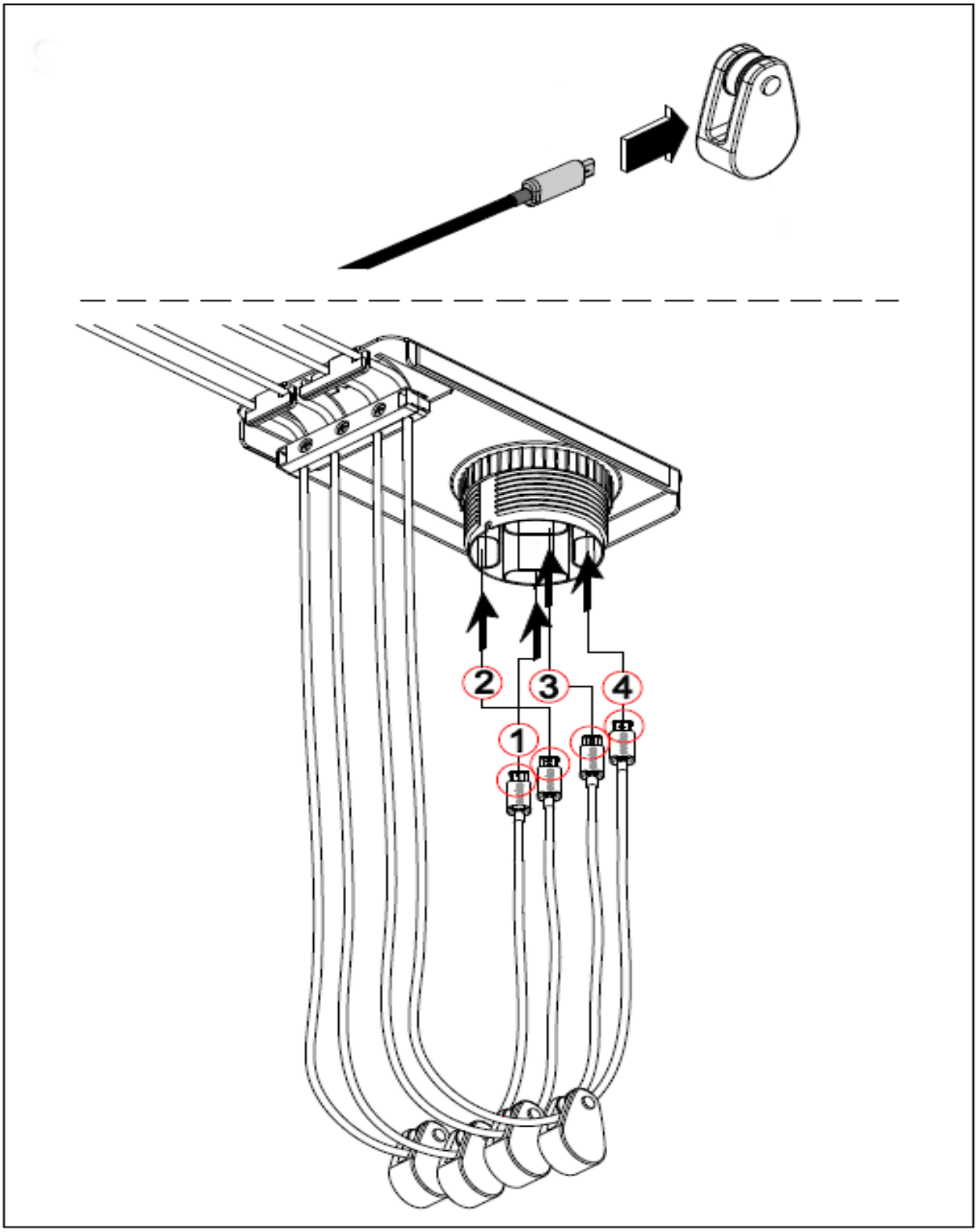

11. Secure the 4 USB-C cables in the pass-through cylinder by reinstalling the cylinder's inner cable-management ring.

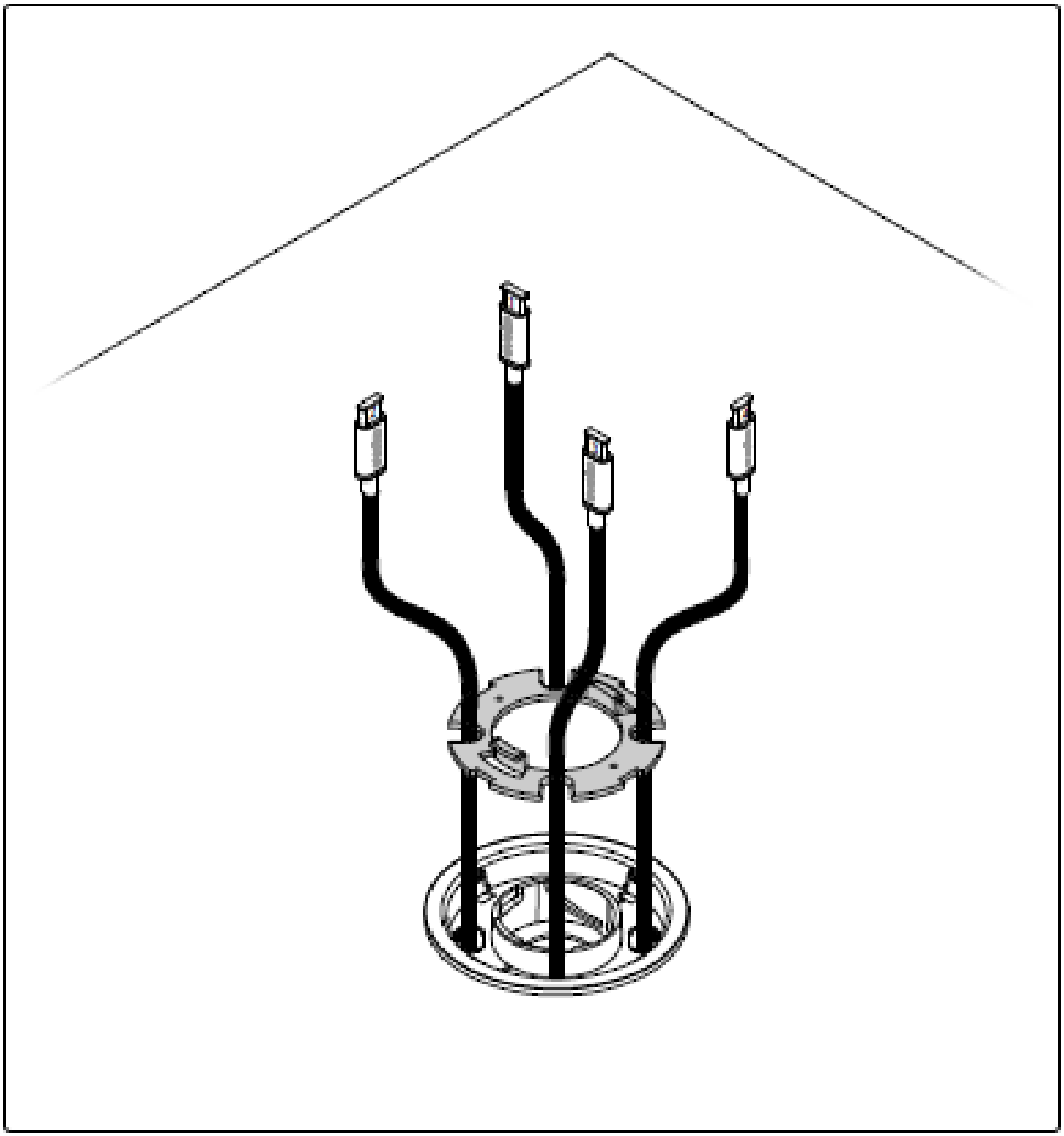

12. Reinstall the pass-through cylinder's outer cable-management ring.

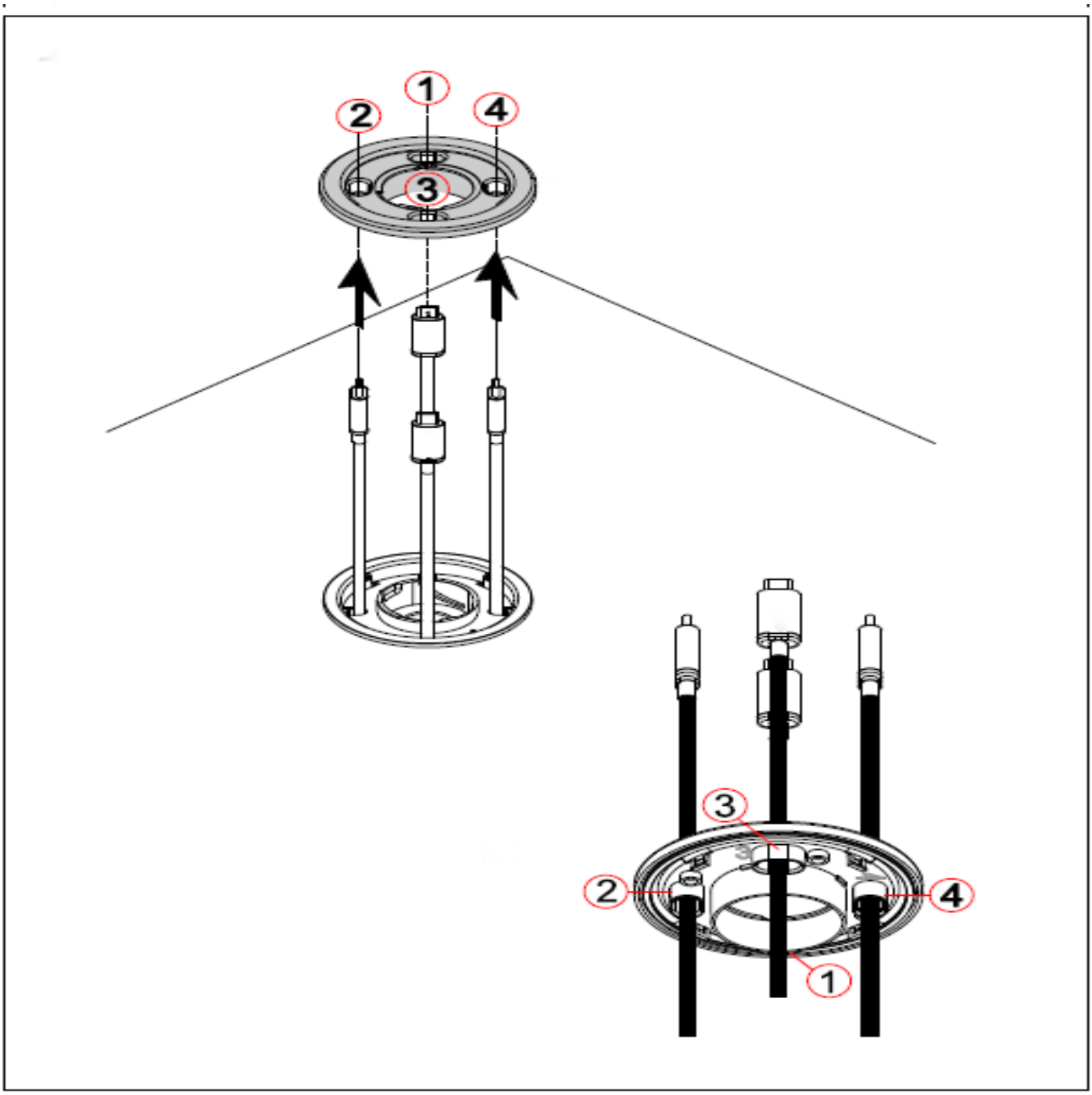

13. Pass the touch controller's USB-C cable through the center of the mounting system pass-through cylinder.

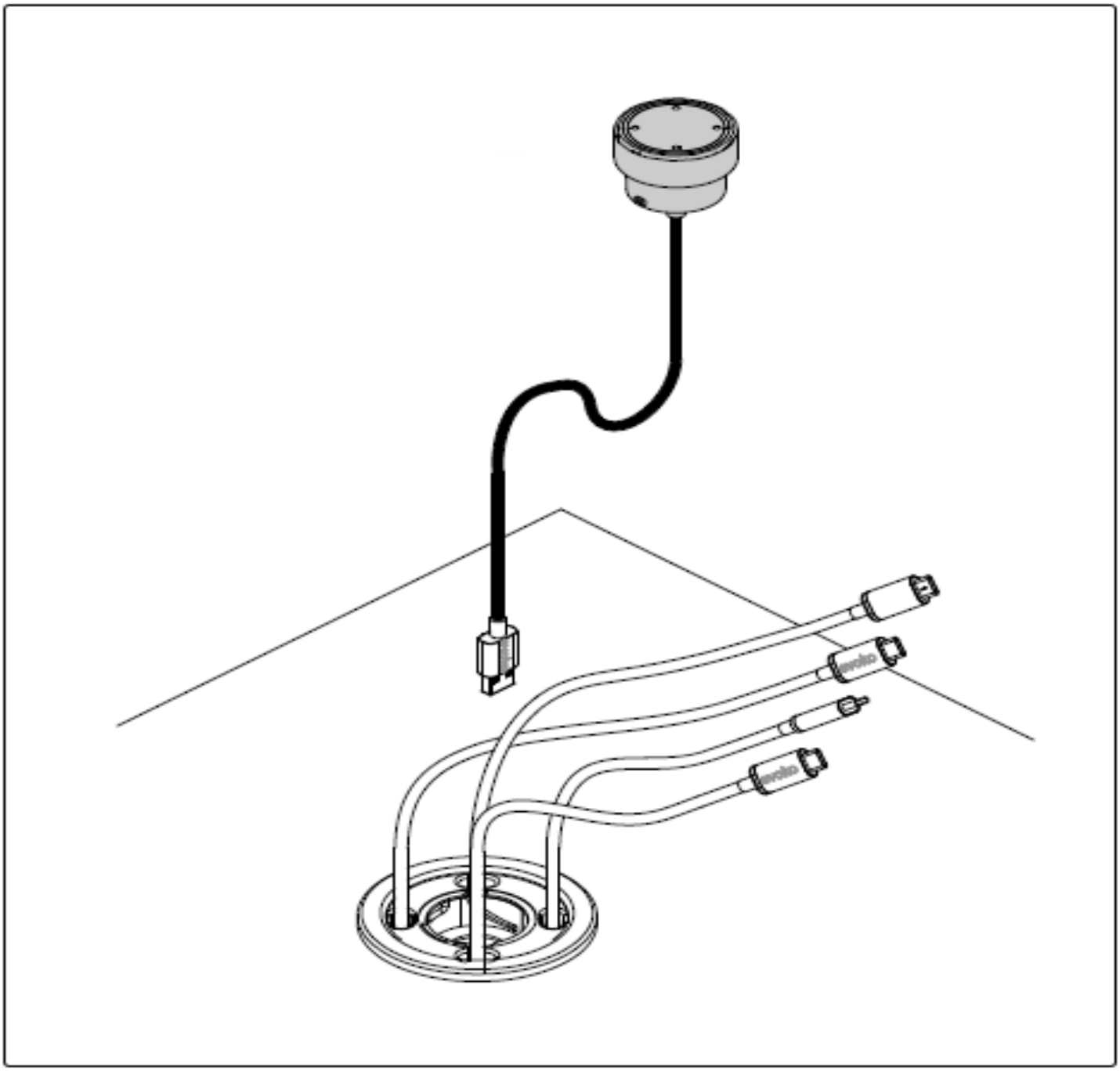

14. Insert the touch controller into the pass-through cylinder, then turn counterclockwise to secure it.

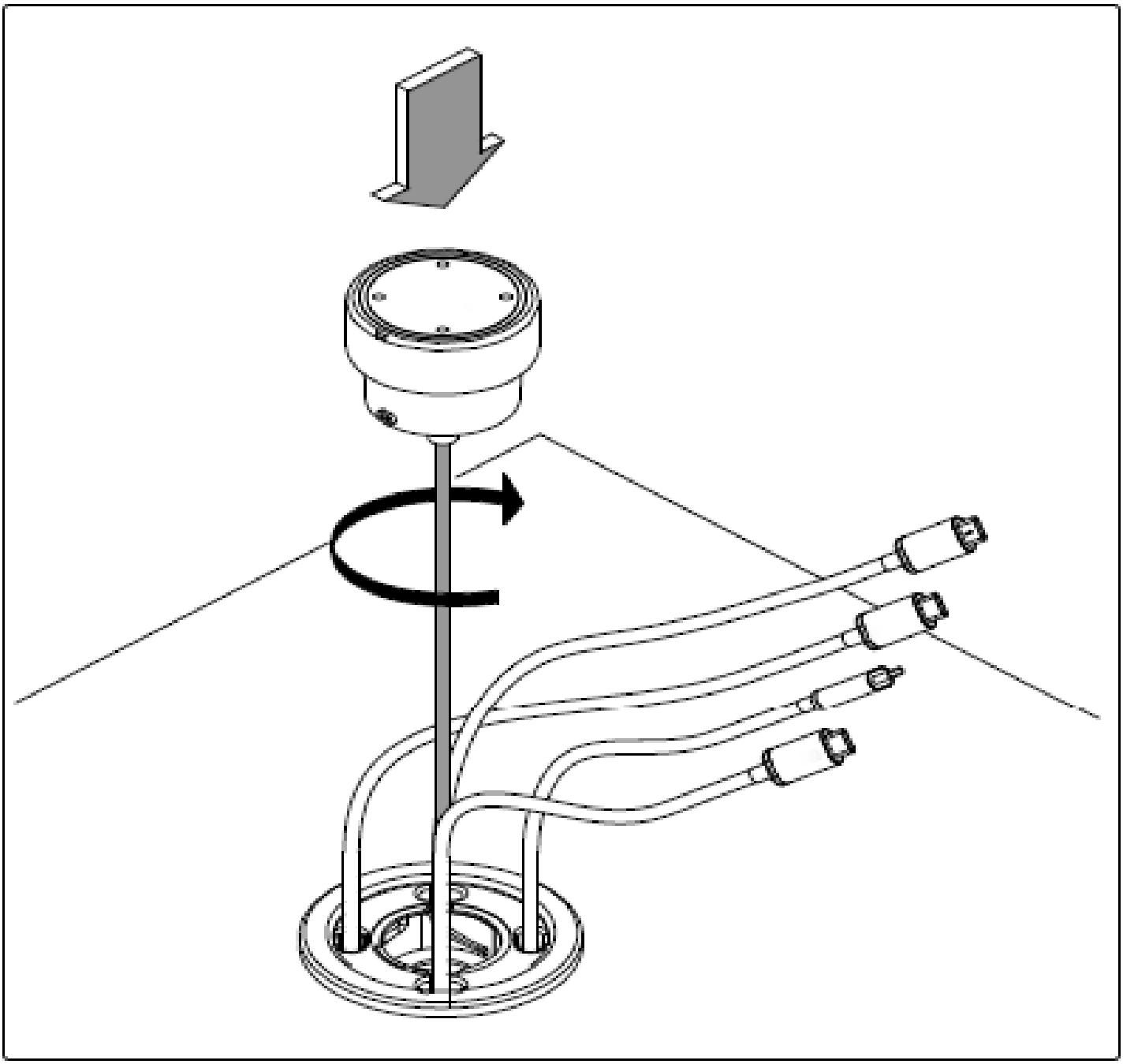

15. Place the MPX 250 on the bottom of the table with the front facing towards the cable management bracket (the side of the MPX with the 4 USB-C ports).

Use 4 fasteners, or VHB tape, to secure the bracket to the bottom of the table.

See the next page for the correct facing of the MPX 250 toward the bracket.

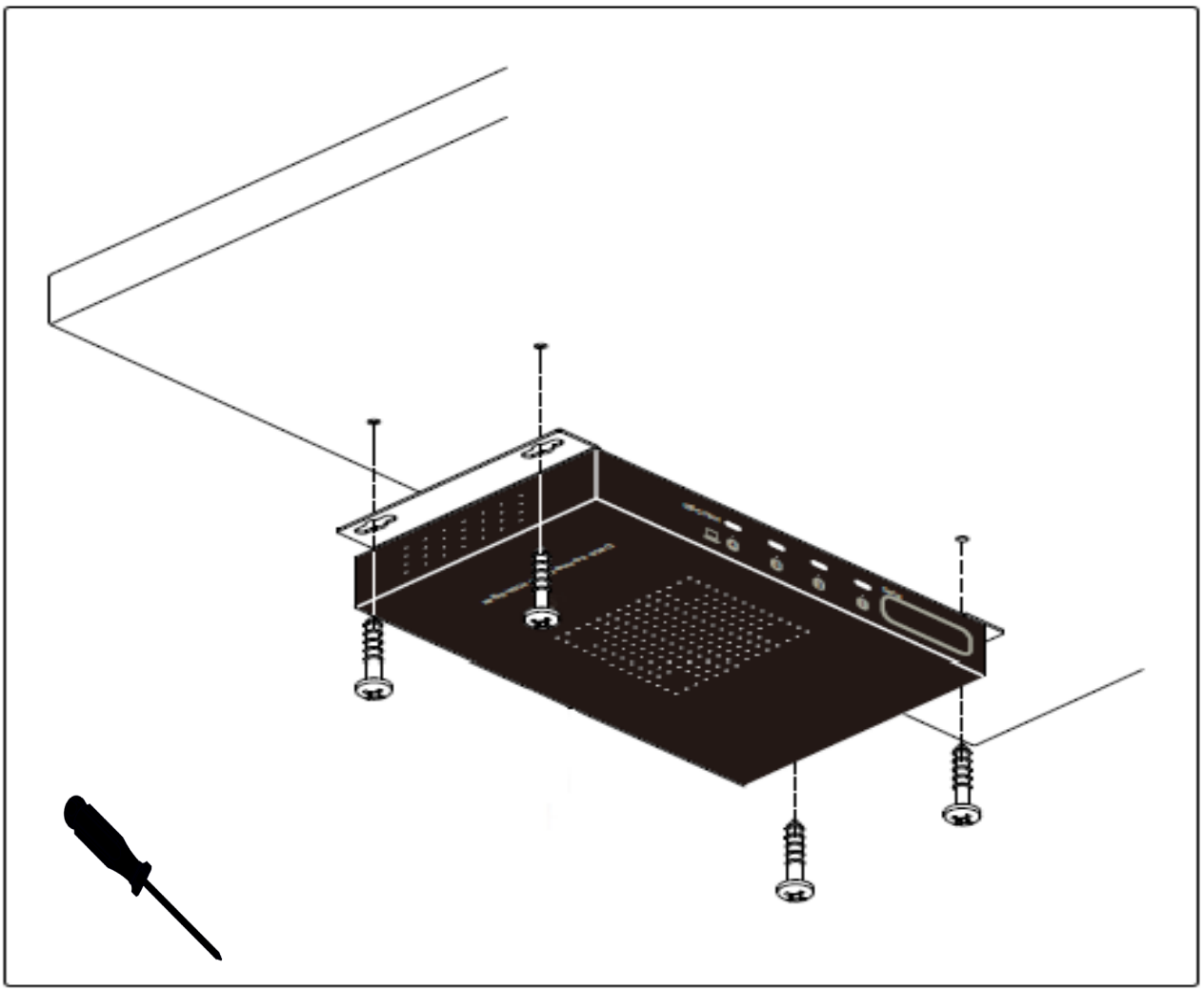

16. Connect the 4 USB-C cables of the cable array to the front panel MPX 250 USB-C ports.

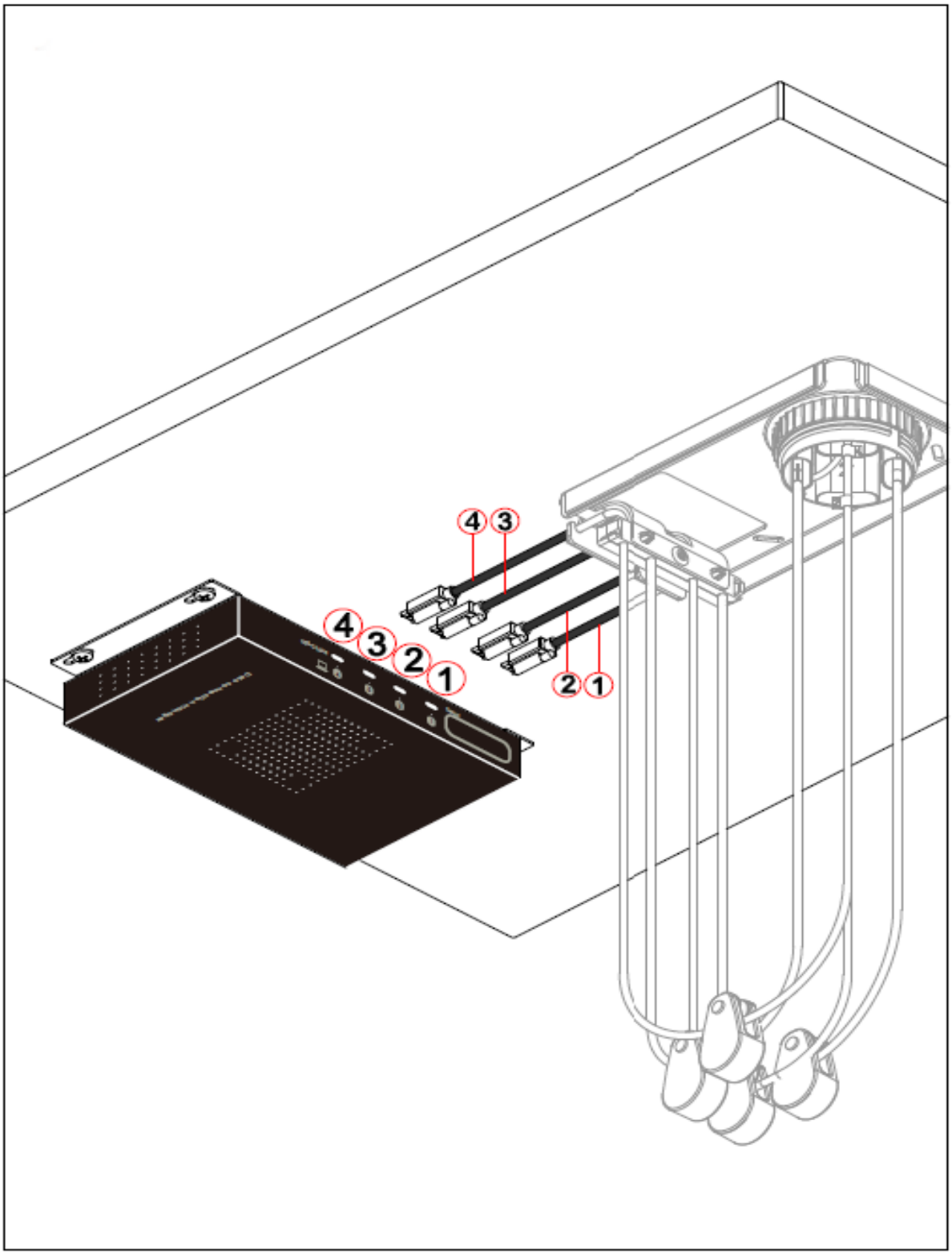

17. Connect the touch controller's USB-A cable to the "Ctrl/AV" USB-A port on the rear panel of the MPX 250.

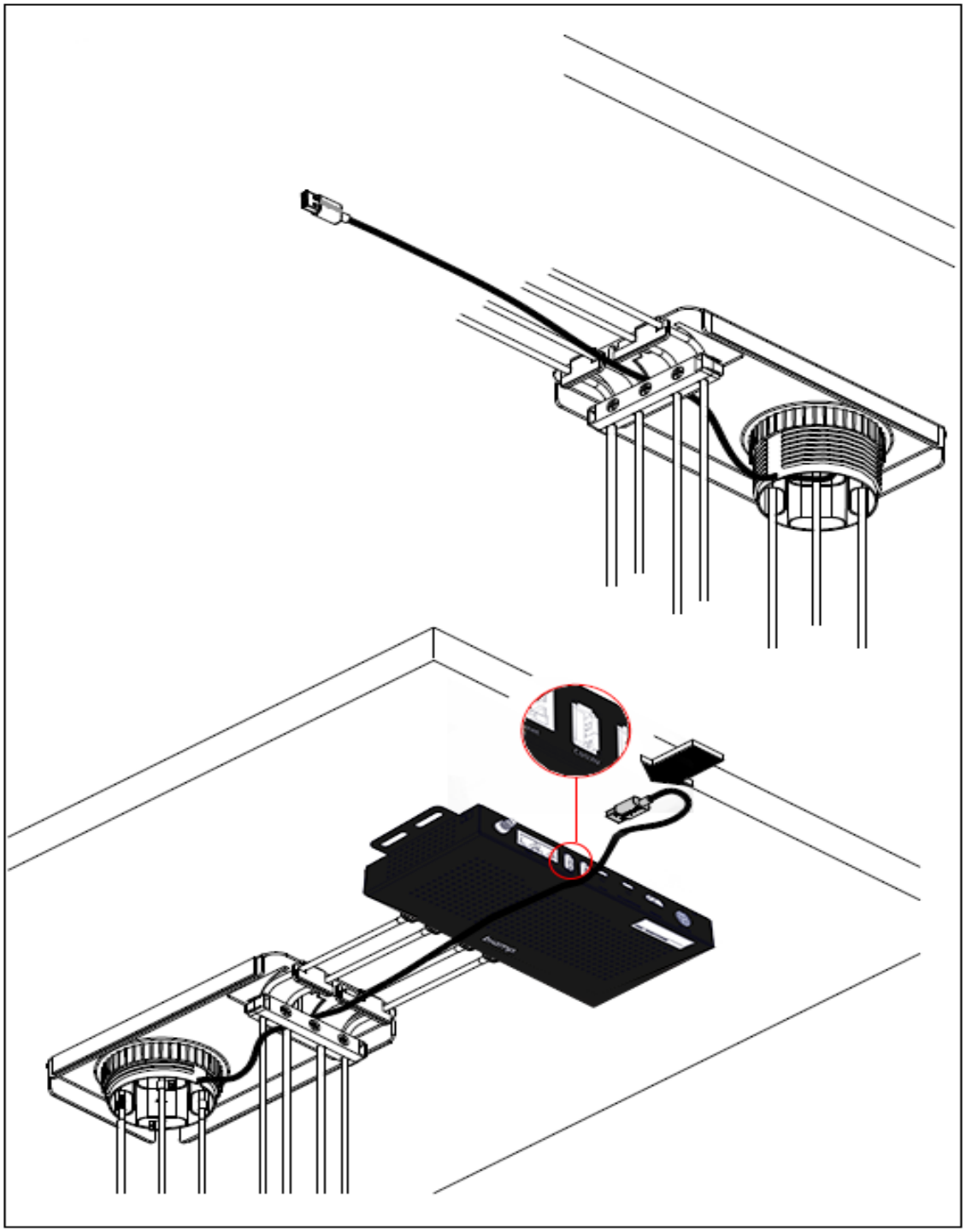

18. Use 4 fasteners, or VHB tape, to secure the power supply near the MPX 250.

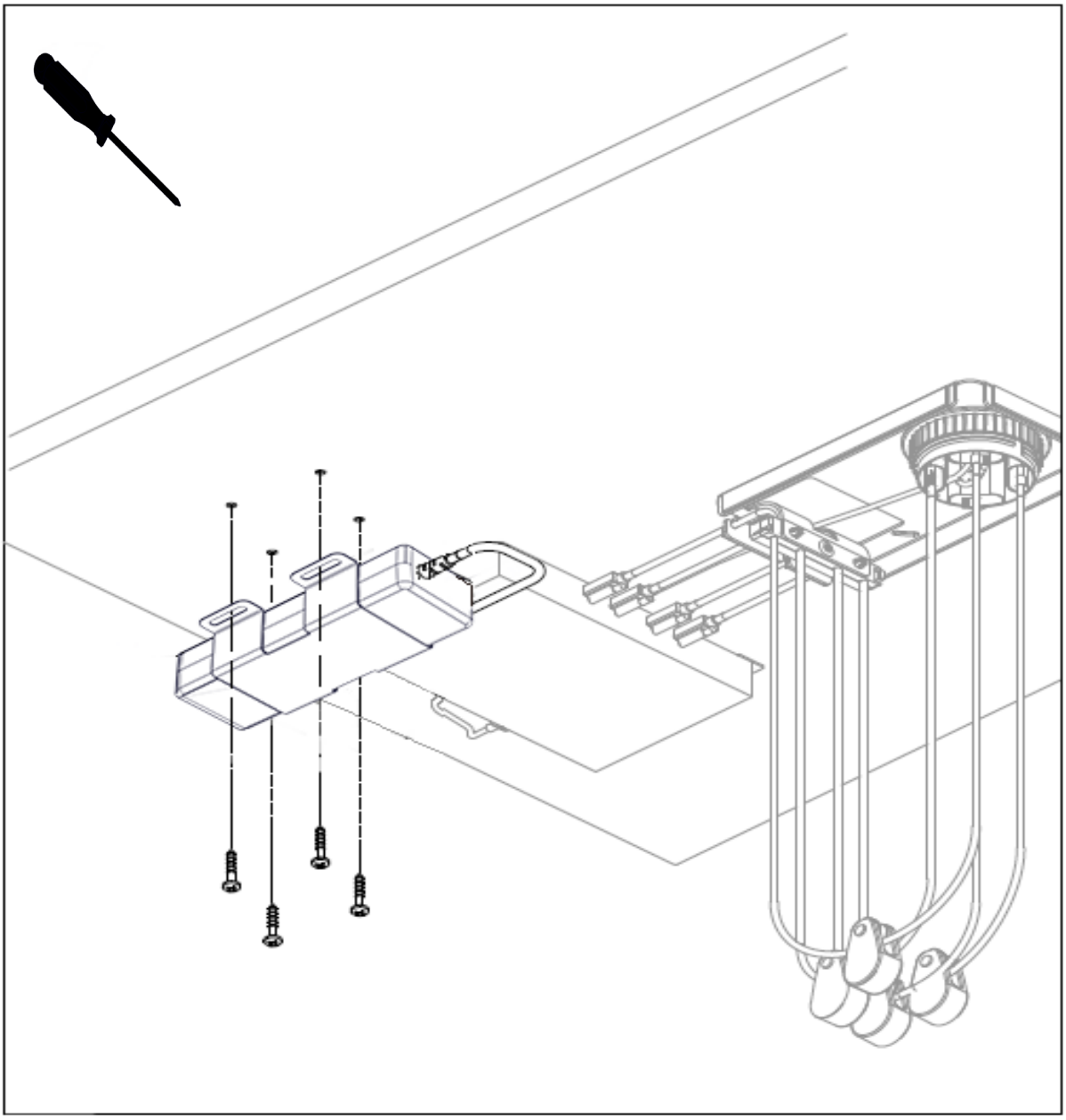

19. Connect the power supply to the DC Power in port on the back of the MPX 250. Then plug the power supply into a wall power supply.

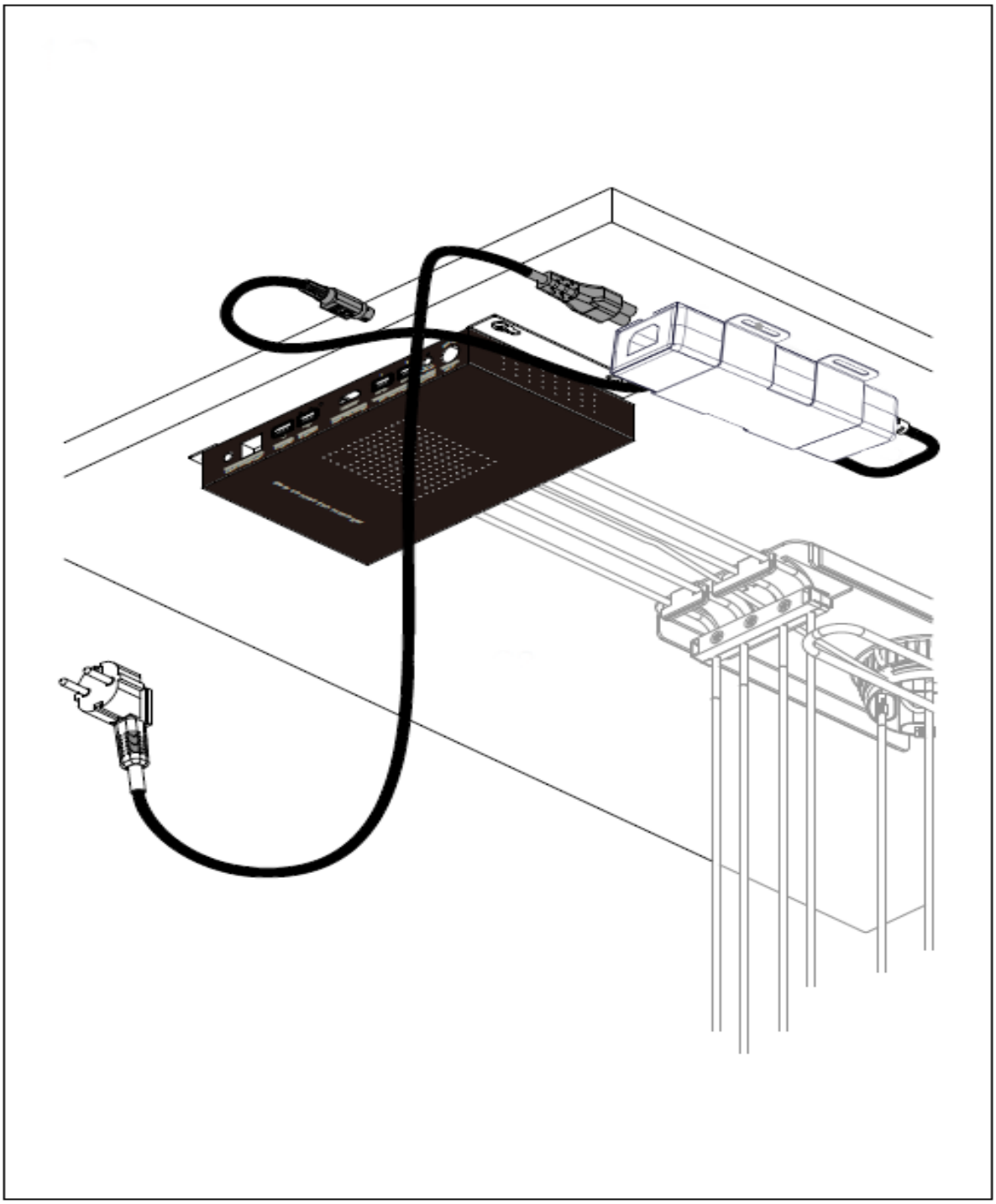

20. Hang 1 USB-C cable in each of the cable management bag's compartments to ensure the cables will not be entangled when in use.

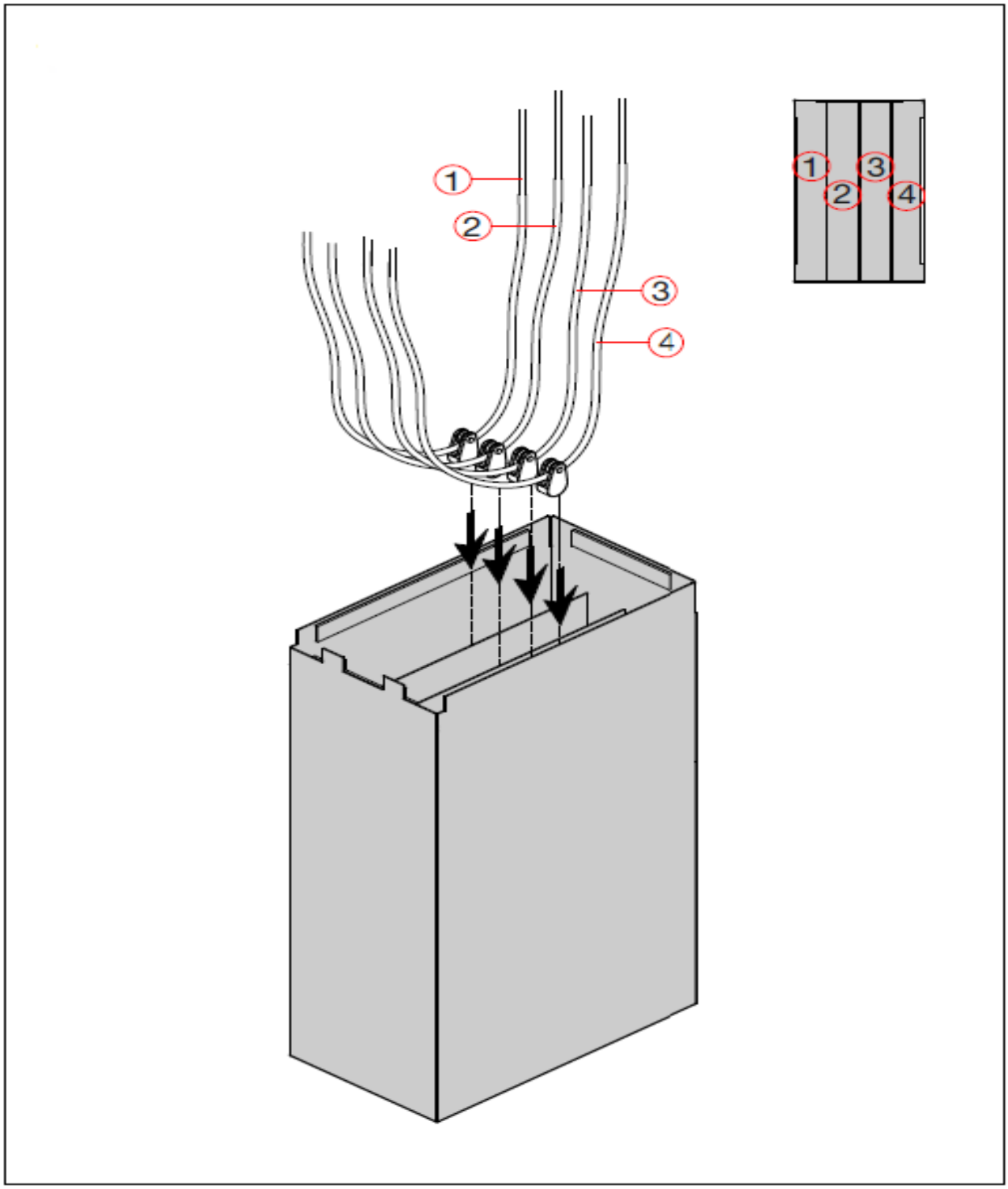

21. Hang the cable management bag on the cable management bracket.

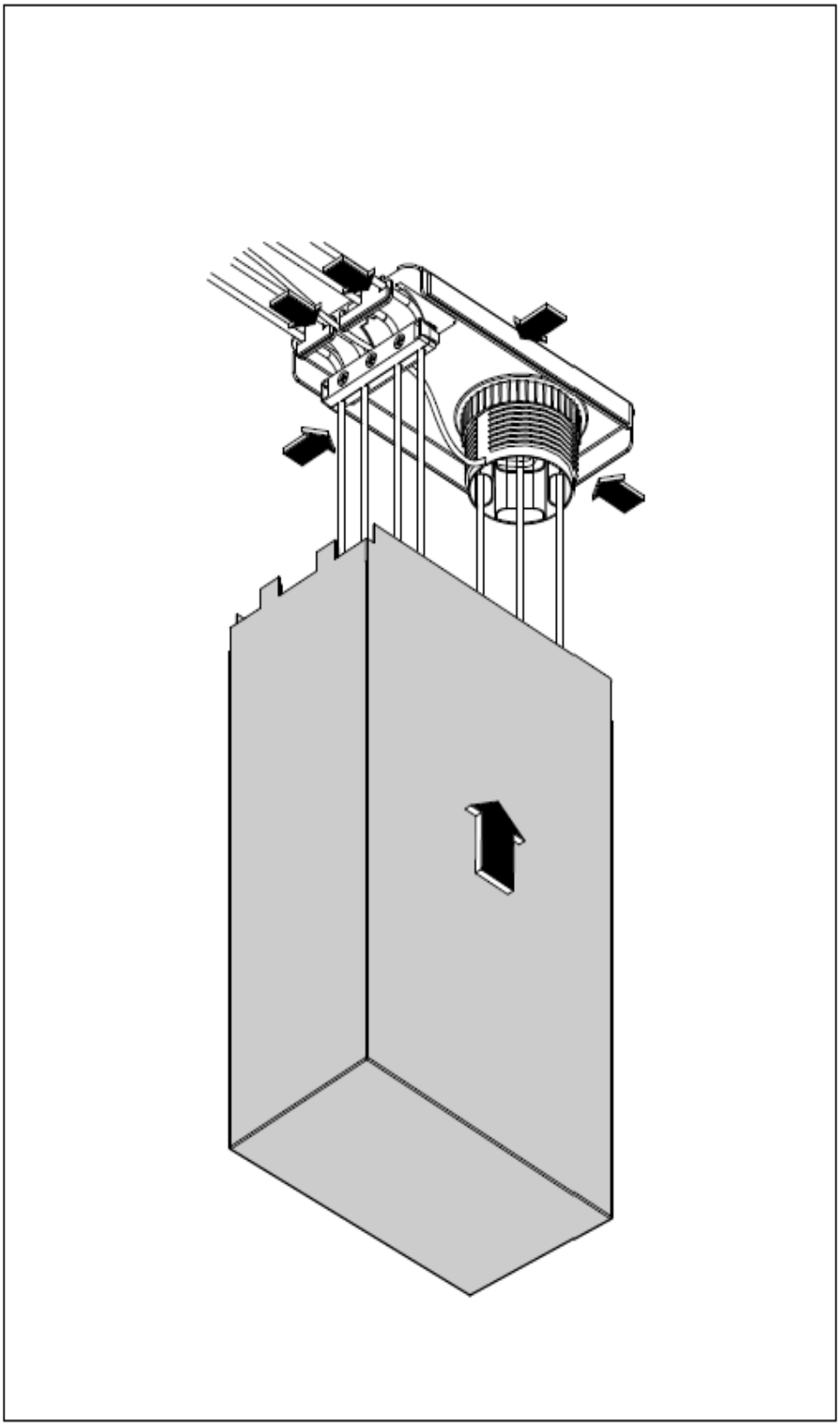

The MPX 250 is now installed.

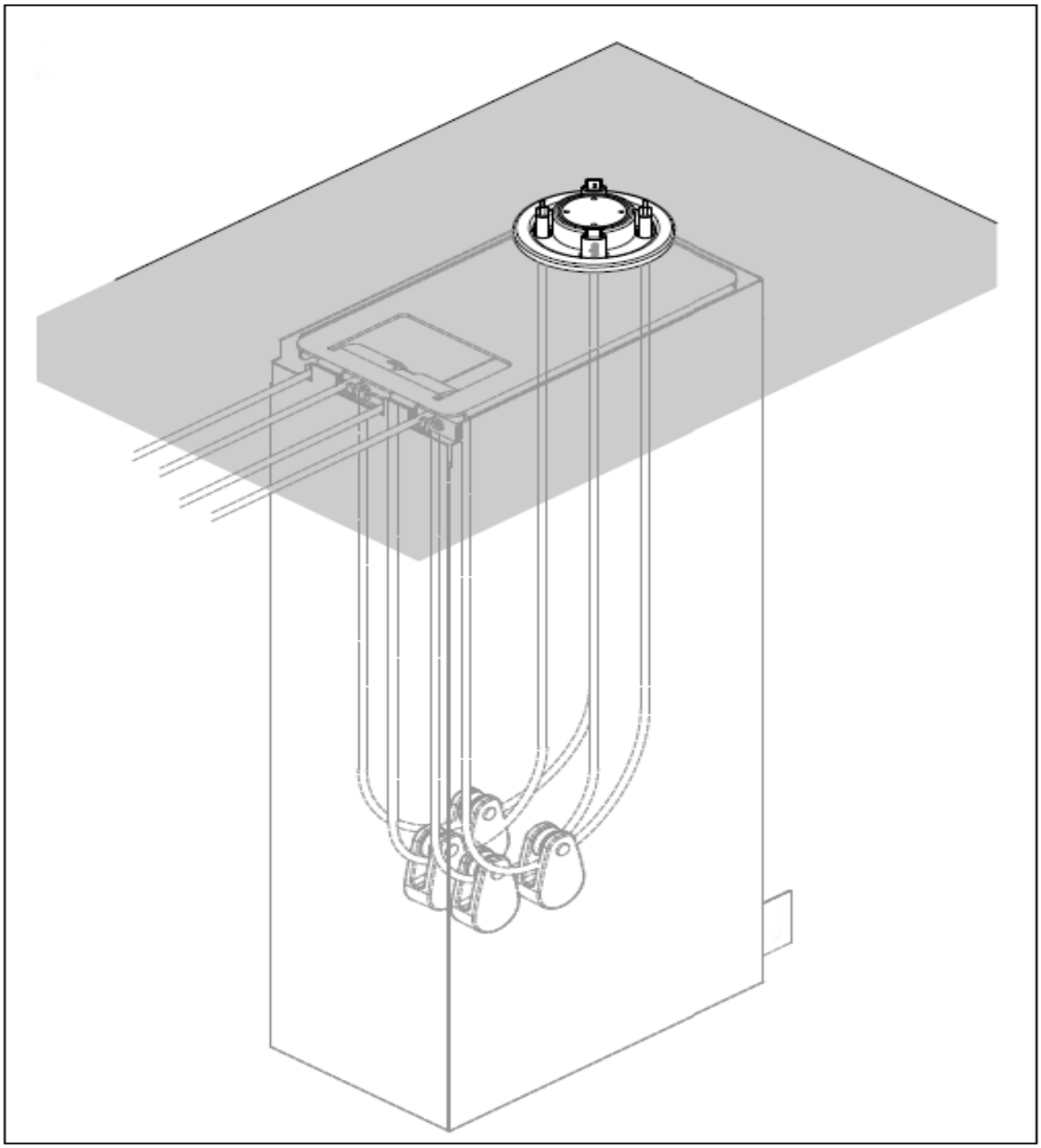

MPX 250 30 EXT INSTALLATION

- This procedure assumes the MPX 250 EXT has been installed in its table-side location.
- Reminder: The MPX 250 EXT is intended for wall-side installations.

MPX 250 EXT 30 INSTALLATION PROCEDURE

1. Select, measure, and mark the position on the surface where you install the MPX

250 EXT 30 and its power supply pack.

- Take extra care in measuring the cable routes and lengths from the MPX 250 to your MPX 250 EXT 30 as well as the MPX 250 EXT 30 to other devices.
- Avoid unnecessary sharp bends with the MPX 250 Link 30 cable's route (more than 50 mm radius).

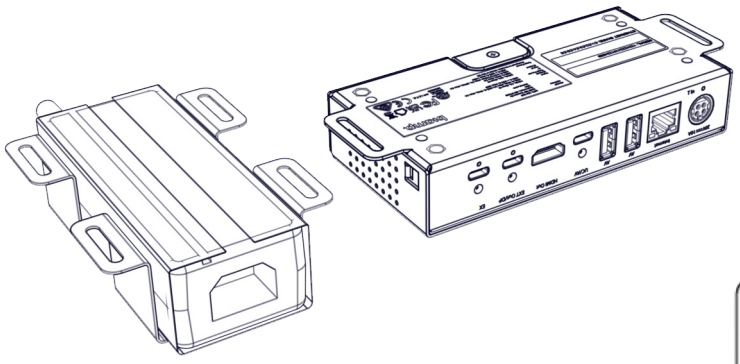

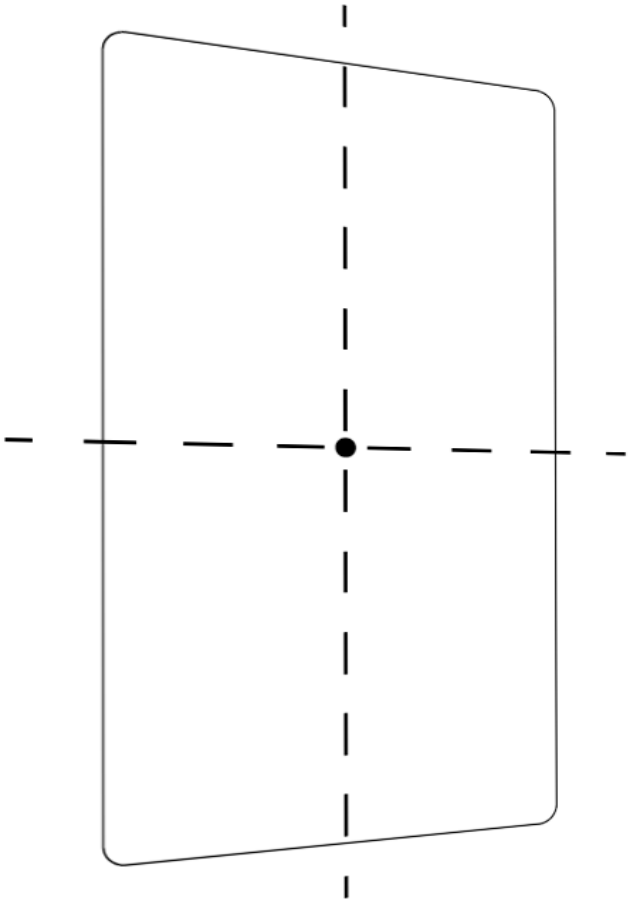

2. Place the MPX 250 EXT in the marked installation location and secure using 2 screws or fasteners appropriate to the surface material.

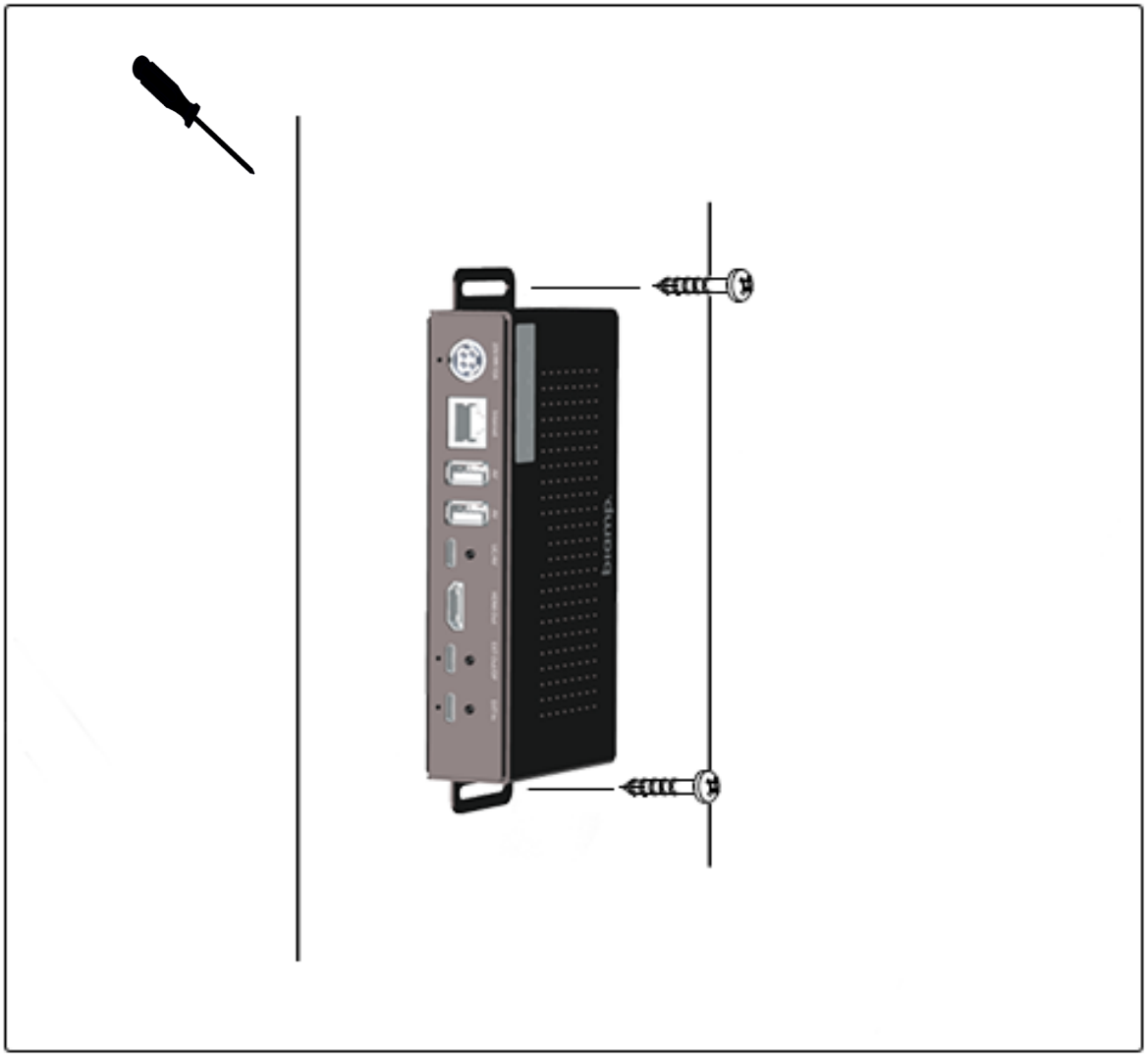

3. Connect the Link 30 cable electronics module's USB-C connector end to the "EXT In" USB-C port on the MPX 250 EXT.

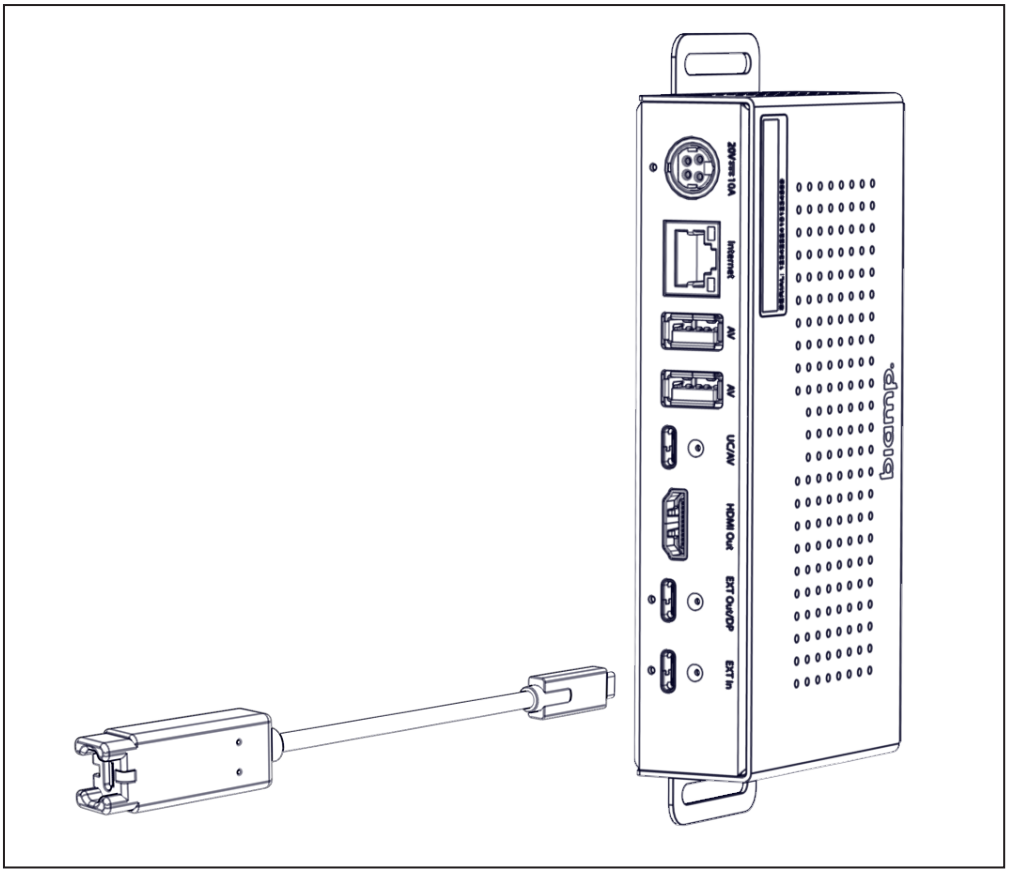

4. Attach a pull-wire to the Link 30 cable's pull end. Pull it from the table to the wall-side location where the MPX 250 EXT box is installed.

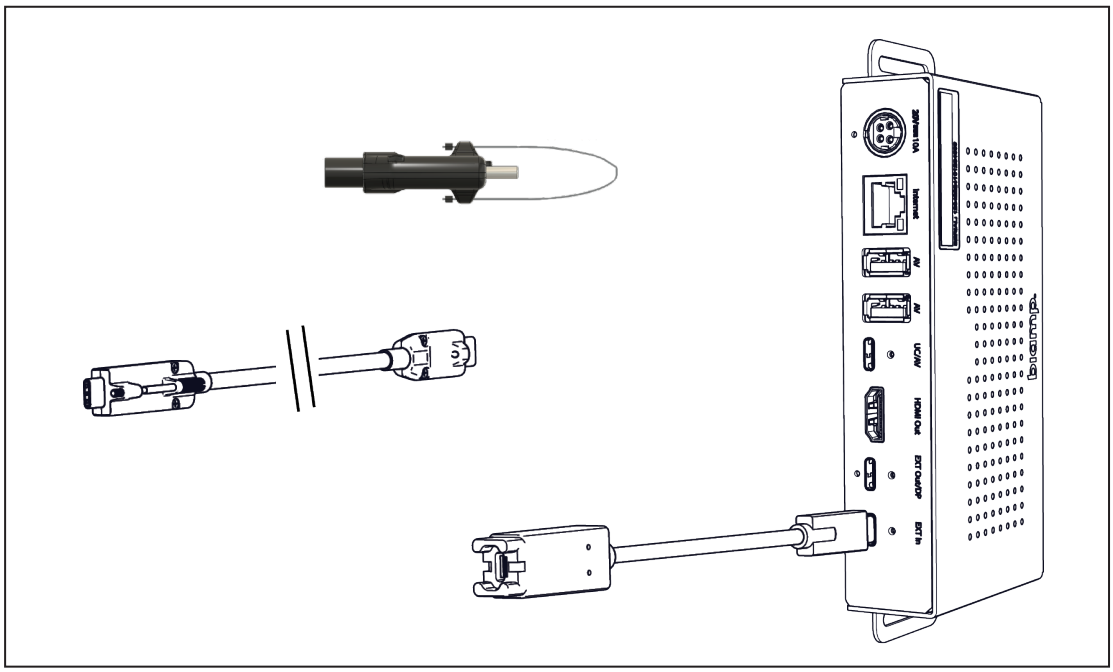

5. Remove the pull cable from the Link 30 cable's pull-end.

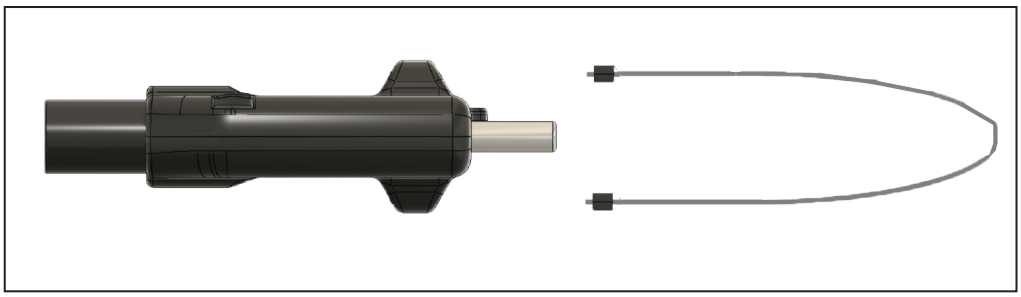

6. Connect the pull-end's USB-C connector to the USB-C port on the cable electronics module.

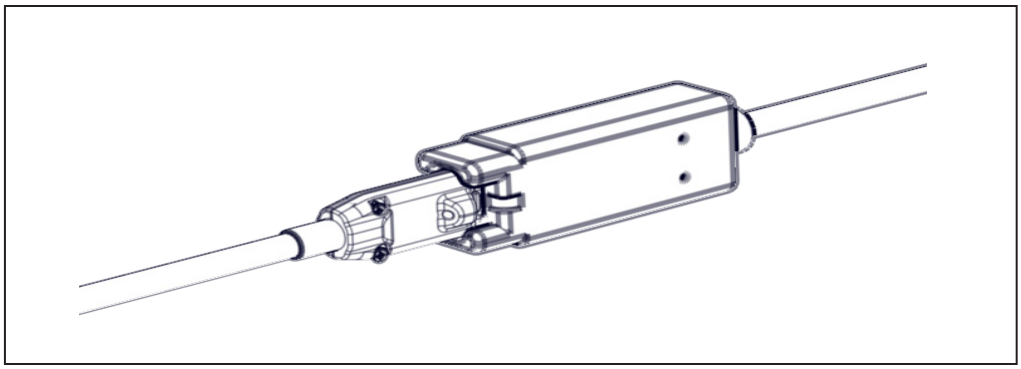

7. Connect the Link 30 cable's USB-C connector to the EXT Out/DP/UC/AV on the rear panel of the MPX 250. Use the locking screw on this end to secure the cable to the USB port's screw slot (arrow).

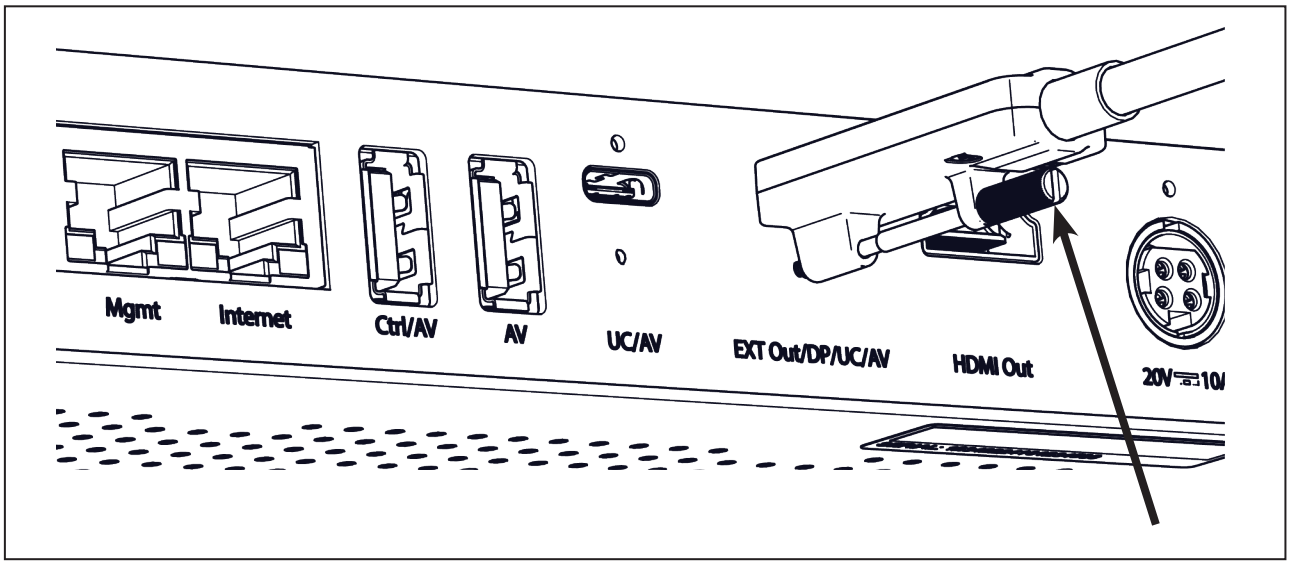

8. Use 4 fasteners (or VHB tape) to secure the power supply near the MPX 250 EXT. Then connect the power supply to the DC Power in port on the back of the MPX 250 EXT. After that, plug the power supply into a wall power supply.

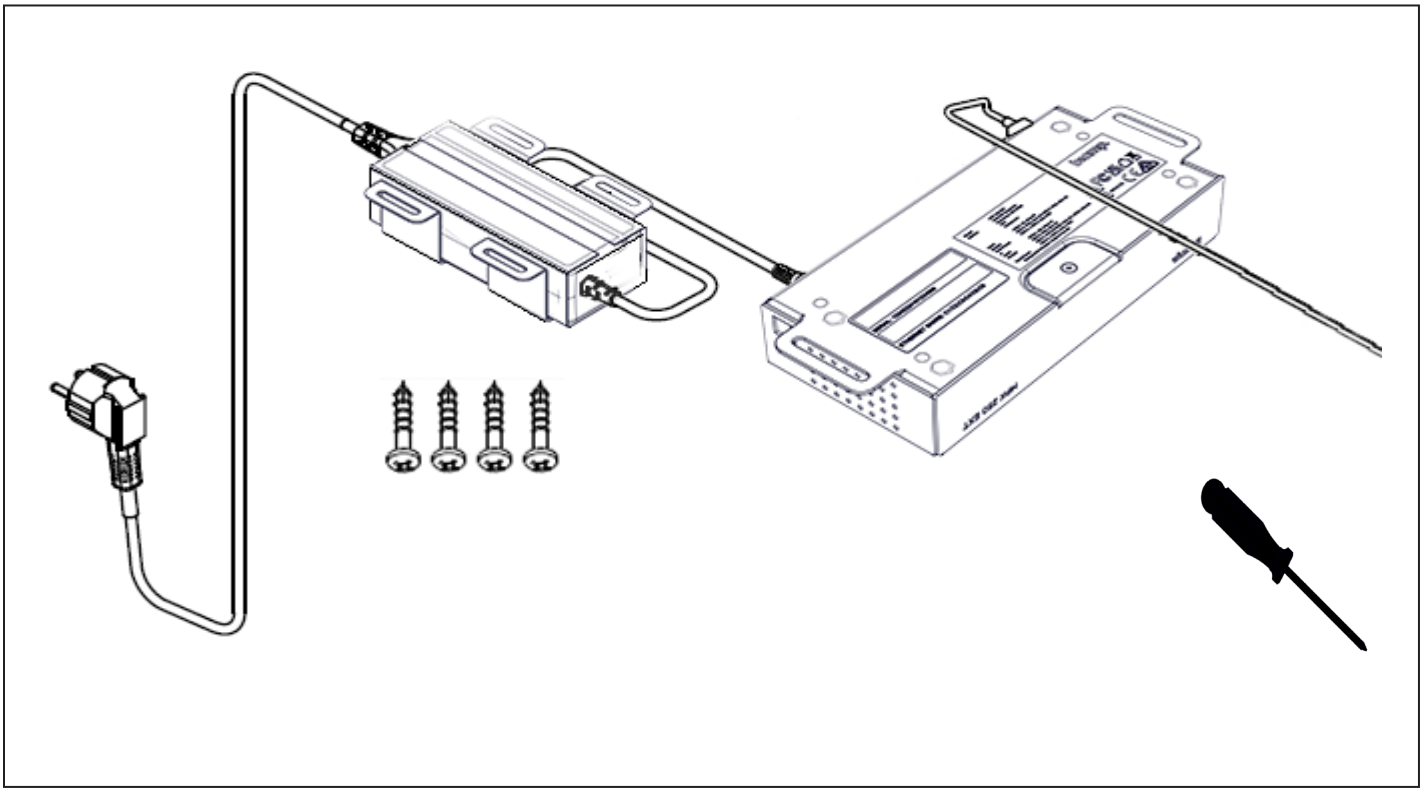

The MPX 250 EXT is now ready to connect to other devices.

SYSTEM ARCHITECTURES

SYSTEM TOPOLOGIES AND ARCHITECTURES

For examples of system connection options and architectures for the MPX 250 and MPX 250 EXT, please see Biamp's Cornerstone technical support site: Getting Started with the MPX 250

CONTACT US

Email: support@biamp.com

Web: support.biamp.com

Warranty: biamp.com/legal/warranty-information

Safety & Compliance: biamp.com/compliance biamp.com/legal/warranty-information

September 2, 2026