Quick Start Guide

Biamp BMA 360D & BMA 360D-I Ceiling Tile Beamforming Microphone

September 2026

Contents

Verify that you have received all parts associated with each of the components.

Inspect your shipment carefully. If the shipment shows obvious signs of damage, retain original boxes and packing material for inspection by the carrier, and contact them immediately. Biamp is not responsible for product damage incurred during shipment.

No	Description	Quantity
1	BMA 360D (24 in) or BMA 360D-I (600 mm)	1

Important Safety Information

1. Before you set up the BMA 360D, read this manual carefully. Follow the setup instructions indicated in this manual.
2. Keep this manual for future use.
3. To prevent electric shock, do not remove screws or the BMA 360D/BMA 360D-I housing. No self-serviceable parts are inside the housing.

WARNING: TO PREVENT FIRE OR ELECTRICAL SHOCK HAZARD, DO NOT EXPOSE THIS PRODUCT TO RAIN OR MOISTURE

THE LIGHTING FLASH AND ARROWHEAD WITHIN THE TRIANGE IS A WARNING SIGN ALERTING YOU OF DANGEROUS VOLTAGE INSIDE THE PRODUCT.

CAUTION

RISK OF ELECTRIC SHOCK DO NOT OPEN

AVIS RISQUE DU CHOC ELECTRIQUE - NE PAS OUVRIR

CAUTION: TO REDUCE THE RISK OF ELECTRIC SHOCK, DO NOT REMOVE COVER (OR BACK) NO USER SERVICEABLE PARTS INSIDE. REFER SERVICING TO QUALIFIED SERVICE PERSONNEL.

THE EXCLAMATION POINT WITHIN THE TRIANGLE IS A WARNING SIGN ALERTING YOU OF IMPORTANT INSTRUCTIONS ACCOMPANYING THE PRODUCT.

SEE MARKING ON BOTTOM/BACK OF PRODUCT

Use only in non-tropical locations.

≤2000 m

Use only at altitudes of 2000 meters or less.

Contact Information and Resources

Product Specifications: biamp.com/support/downloads

Biamp Headquarters: 9300 SW Gemini Drive, Beaverton, OR 97008, USA biamp.com

Technical Support: support.biamp.com email: Support@biamp.com Tel: +1 503-641-7287

Warranty: biamp.com/legal/warranty-information

Safety & Compliance: biamp.com/compliance

© 2026 biamp. All rights reserved.

Setup

Connect the BMA 360D/D-I, Speakers (optional), PoE Injector*, Network Switch with a DHCP server, Computer, and Dante Enabled Audio DSP as shown.

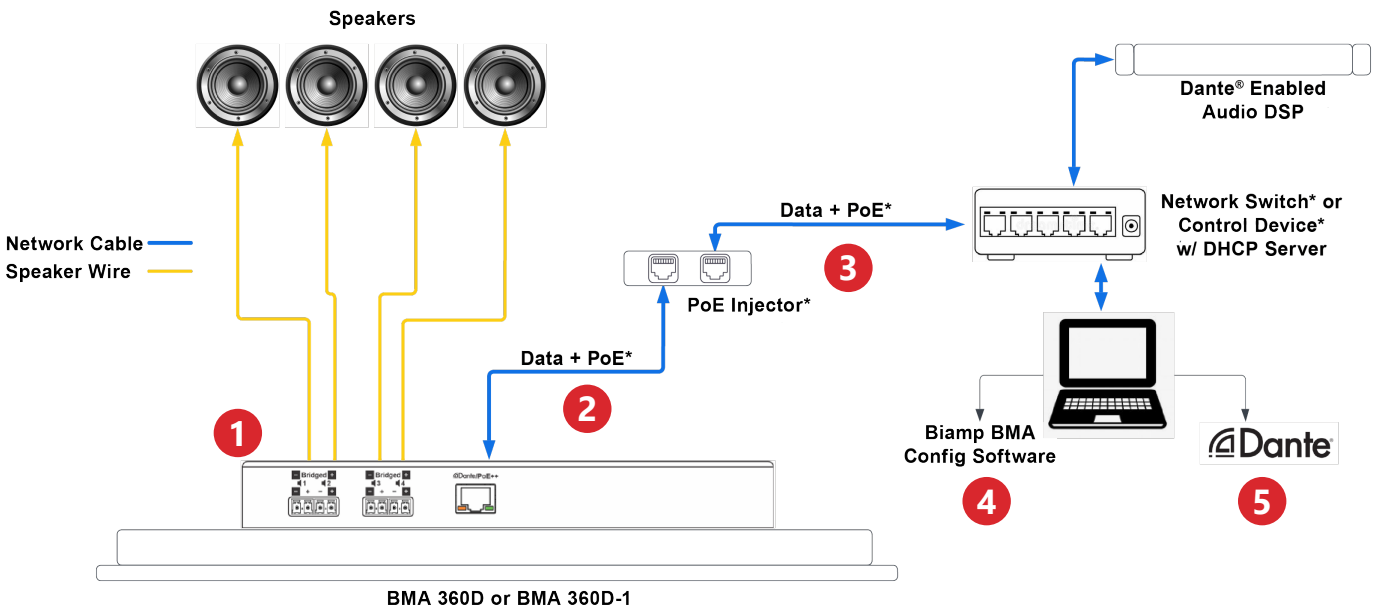

***Note:** a PoE injector is only necessary if the network switch or data control device doesn't generate the 36 W of PoE power necessary for the microphone, **or** if there are speakers connected to the mic. Speakers will need 90 W from a PoE++ Injector.

Connections

Refer to the numbered diagram above for these connections.

1. Install and wire speakers. Using speakers requires the use of a 90 W PoE++ injector.
2. Connect a Cat 6 cable (not provided) between the BMA 360D/D-I and the PoE Injector* or Biamp control device with PoE+.
3. (System with speakers only): Connect a Cat 6 cable (not provided) between the PoE injector and the network switch with a DHCP server.
4. Configure the BMA 360D/D-I network and audio properties using Biamp BMA Config software**.
5. Connect the BMA 360D/D-I to other Dante enabled devices using Dante Controller**.

Operating Requirements

No	Description	Detail
* Suggested Equipment		
1	PoE Injector	TesiraConnect, ForteX or other Biamp device providing PoE+ power, 36 W (No Speakers)
		EasyConnect POE-90W injector, 90 W (Supports Speakers)
2	Speaker Wire	24 AWG two conductor
3	Network Cable	Solid core, 23 AWG, factory terminated Cat 6
4	Network Switch	100 Mbps or greater, DHCP enabled
** Suggested Software		
5	Biamp BMA Config software	biamp.com/support/downloads
6	Audinate Dante Controller	getdante.com/products/software-essentials/dante-controller/

Mounting Options

- Ceiling grid
- Recessed mount (optional accessory BMA 360-SM)
- Surface mount (optional accessory BMA 360-RM/BMA 360-RM-I)
- VESA pole mount (Customer supplied, VESA 100 hole pattern, M4 nuts 10mm max length
- Suspended ceiling-tile mount with seismic cables (Customer supplied)

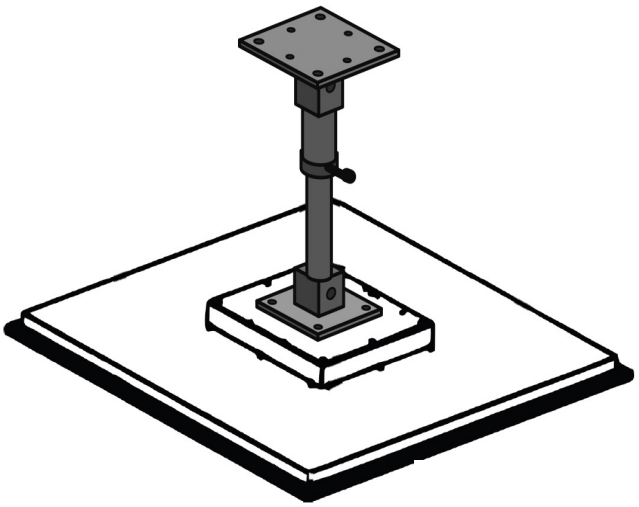

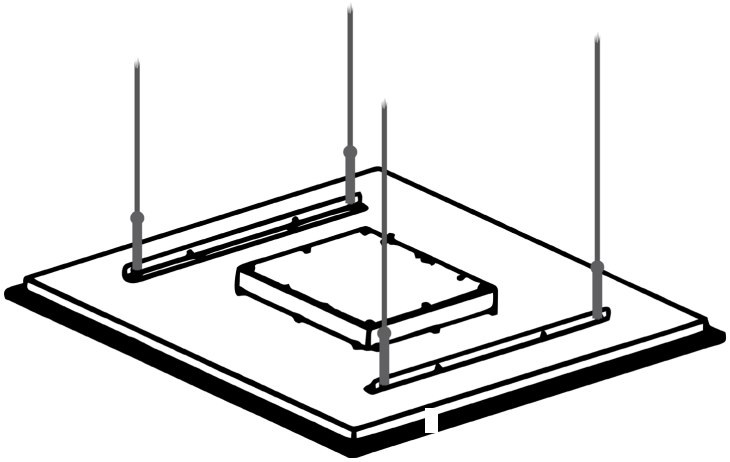

Optional Accessories

Surface Mounting Kits

Biamp BMA 360-SM

Recessed Mounting Kits

Biamp BMA 360D-RM

Biamo BMA 360D-RM-I

Safety Precautions

Installation

Avoid contact with any liquid, gas or solid material that may cause corrosion.

Do Not Disassemble

This product has no user-repairable parts. Damage caused by unauthorized disassembly is not covered by warranty.

Notice

Electromagnetic fields at specific frequencies may affect audio quality.