Procure

Powered By Choice,
Driven By You.

+971 454 65041 | info@procure.ae | www.procure.ae

Specifications

Main unit

Power supply		AC 100-240 V, 50/60 Hz
Power consumption*1		570W (during standby) Approx. 0.5 W (When [STANDBY MODE] is set to [ECO]) Approx. 22 W (When [STANDBY MODE] is set to [NORMAL]) Approx. 47 W(When [IN STANDBY MODE] in [AUDIO SETTING] is set to [ON], maximum audio is output, and USB memory is inserted in the <VIEWER/PAIRING> terminal) Approx. 115 W(When [QUICK STARTUP] is set to [ON], [IN STANDBY MODE] in [AUDIO SETTING] is set to [ON], maximum audio is output, and the power is supplied from the <DC OUT> terminal)
BTU value		Max 1,945BTU (without light 1,836BTU)
LCD panel	Panel size	19.3 mm (0.76 inches) diagonal (16:10 aspect ratio)
	Display method	Transparent LCD panel (× 3, R/G/B)
	Drive method	Active matrix method
	Pixels	2,304,000 (1920 × 1200) × 3
Lens	PT-MZ770	Powered zoom (1.6×), focus lenses, F 1.7–2.3, f 26.8–45.5 mm Throw ratio 1.6–2.8:1
	PT-MZ770L	Optional powered zoom/focus lenses and fixed-focus lens
Light source		Laser Diode
Brightness life of set		Half brightness at 20,000 hours (When[LIGHT POWER] is set to [NORMAL]) * IEC62087: 2008 Broadcast contents, DYNAMIC CONTRAST [2], Temperature: 30°C (86°F), Under conditions of 0.15 mg/m^3 of particulate matter
Projection size		1.02–10.16 m (40–400 inches) diagonally, 16:10 aspect ratio
Light output *1		8,000 lumens (Input signals: PC, LIGHT POWER: NORMAL, PICTURE MODE: DYNAMIC)
Center-to-corner uniformity		90%
Contrast ratio*1		3,000,000:1(all white/all black)(Dynamic Contrast 1 or 2) (Input signals: PC, LIGHT POWER: NORMAL, PICTURE MODE: DYNAMIC)
Resolution		WUXGA 1920 × 1200 pixels
Scanning frequency	RGB	fH: 15- 91kHz, fV: 24 - 100Hz, dot clock: 162 MHz or less
	YPBPR (YCBCR)	480i (525i): fH 15.73 kHz; fv 59.94 Hz, 576i (625i): fH 15.63 kHz; fv 50 Hz, 480p (525p): fH 31.47 kHz; fv 59.94 Hz, 576p (625p): fH 31.25 kHz; fv 50 Hz, 720 (750)/60p: fH 45.00 kHz; fv 60 Hz, 720 (750)/50p: fH 37.50 kHz; fv 50 Hz, 1080 (1125)/60i: fH 33.75 kHz; fv 60 Hz, 1080 (1125)/50i: fH 28.13 kHz; fv 50 Hz, 1080 (1125)/25p: fH 28.13 kHz; fv 25 Hz, 1080 (1125)/24p: fH 27.00 kHz; fv 24 Hz, 1080 (1125)/24sF: fH 27.00 kHz; fv 48 Hz, 1080 (1125)/30p: fH 33.75 kHz; fv 30 Hz, 1080 (1125)/60p: fH 67.50 kHz; fv 60 Hz, 1080 (1125)/50p: fH 56.25 kHz; fv 50 Hz
	Video	fH: 15.73 kHz / 15.63 kHz fV: 59.94 Hz / 50 Hz [NTSC/NTSC4.43/PAL/PAL60/PAL-N/PAL-M/SECAM]
	HDMI	•Moving image signal resolution: 480/60i(*2), 576/50i(*2) to 4096 x 2160 Still image signal resolution: 640 x 400 to 3840 x 2160 (non-interlace) •Dot clock frequency: 25 MHz to 594 MHz
	DIGITAL LINK	•Moving image signal resolution: 480/60i(*2), 576/50i(*2) to 4096 x 2160 Still image signal resolution: 640 x 400 to 3840 x 2160 (non-interlace) •Dot clock frequency: 25 MHz to 297 MHz

Keystone correction range

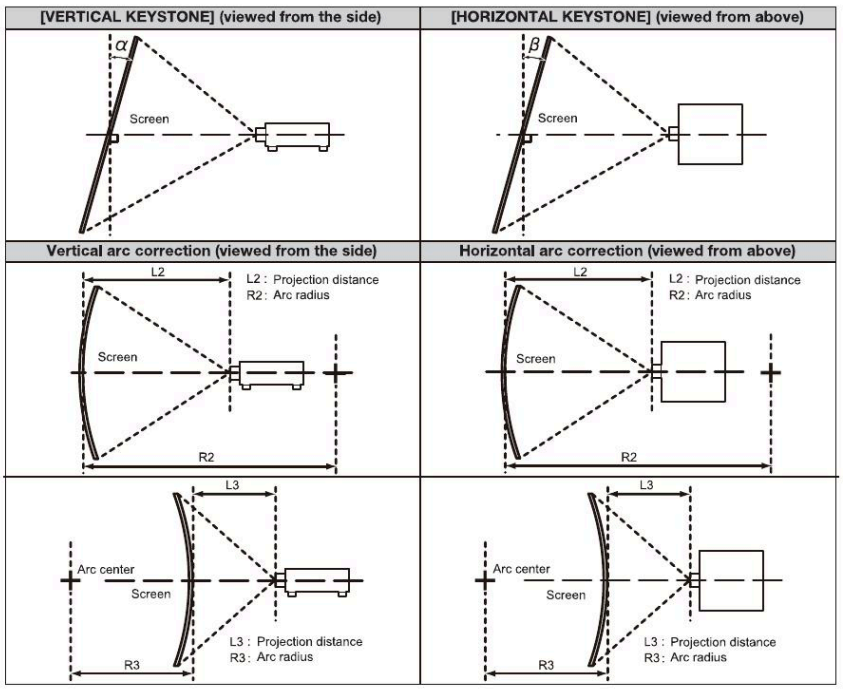

Projection Lens Model No.	Throw ratio	Only [KEYSTONE] used*3		[KEYSTONE] and [CURVED CORRECTIN] used together				Only [CURVED CORRECTIN] used	
		Vertical keystone correction angle α (°)	Horizontal keystone correction angle β (°)	Vertical keystone correction angle α (°)	Horizontal keystone correction angle β (°)	Min. value of R2/L2	Min. value of R3/L3	Min. value of R2/L2	Min. value of R3/L3
Standard zoom lens/ ET-ELS20*	1.61-2.76:1	±25	± 30	± 20	± 15	0.9	1.8	0.5	1.0
ET-ELW21	0.764:1	± 22	± 15	± 8	± 8	1.7	4.3	1.0	2.6
ET-ELW22	0.786-0.983:1	± 22	± 15	± 8	± 8	1.7	4.3	1.0	2.6
ET-ELW20	1.21-1.66:1	± 25	± 30	± 20	± 15	1.2	3.1	0.7	1.8
ET-ELT22	2.72-4.48:1	± 25	± 30	± 20	± 15	0.6	1.1	0.3	0.6
ET-ELT23	4.44-7.12:1	± 25	± 30	± 20	± 15	0.4	0.7	0.2	0.4

* Available only in the US, Canada and Europe.

Optical axis shift		Vertical ±67%, Horizontal ±35% (Supplied lens/ET-ELS20/ET-ELW20/ET-ELT22/ET-ELT23) Vertical ±60%, Horizontal ±30% (ET-ELW22) NOTE: Optical axis shift function cannot be operated when used with the ET-ELW21.
Installation		Ceiling/desk/AUTO, front/rear, 360 degree free installation
Speaker		4.0 cm round-type x 1
Maximum usable volume output		10 W (monaural)
Terminals	HDMI 1 IN	HDMI 19 pin, HDCP2.2 and Deep color compatible Audio signals : Linear PCM (Sample frequency : 48 kHz/44.1 kHz/32 kHz)
	HDMI 2 IN	HDMI 19 pin, HDCP2.2 and Deep color compatible Audio signals : Linear PCM (Sample frequency : 48 kHz/44.1 kHz/32 kHz)
	RGB 1 IN	BNC (female) x 5, RGB/Y P_B/P_R (C_B/C_R)
	RGB 2 IN	D-Sub 15 p (female) x 1, RGB/Y P_B/P_R (C_B/C_R)
	MONITOR OUT	D-Sub 15 p (female) x 1, RGB/Y P_B/P_R (C_B/C_R)
	VIDEO IN	Pin jack x 1
	AUDIO IN 1	M3 stereo jack x 1(L-R)
	AUDIO IN 2	M3 stereo jack x 1(L-R)
	AUDIO IN 3	Pin jack x 2(L-R)
	VARIABLE AUDIO OUT	M3 jack, 0 V[rms] to 2.0 V[rms] variable, output imedance 2.2 k ohms and less
	SERIAL IN	D-sub 9 pin, RS-232C compliant, for computer control use
	REMOTE 1 IN	D-Sub 9 p (female) x 1, for external control (parallel)
	REMOTE 2 IN	M3 jack x 1(L-R) for link control (for wired remote control)

Terminals	LAN	RJ-45 x 1 for network connection, 10/100Base-TX, compliant with PJLink™(Class 2)
	DIGITAL LINK / LAN	RJ-45 x 1 for network and DIGITAL LINK (video/network/serial control) connection, 100Base-TX, compliant with PJLink™(Class 2), Deep Color, HDCP2.2
	VIEWER / PAIRING	USB type-A × 1
	DC OUT	USB type-A × 1(DC 5V, 2A(Max))
	Wireless module connecting terminal x 1, (For Wireless module ET-WM300)	
Power cord length		3.0m(9ft 10in)
Cabinet materials		Molded plastic
Dimensions (W × H × D)	PT-MZ770	560× 205*4× 443mm (22-1/16× 8-1/16*4× 17-7/16inches) (with supplied lens)
	PT-MZ770L	560× 205*4× 428mm (22-1/16× 8-1/16*4× 16-27/32inches) (without lens)
Weight*5	PT-MZ770	Approx. 17.1 kg (37.7 lbs) (with supplied lens)
	PT-MZ770L	Approx. 16.2 kg (35.6 lbs) (without lens)
Noise level*1		35 dB (LIGHT POWER : NORMAL/ECO), 28 dB (LIGHT POWER : QUIET)
Laser Classification	Laser Class	USA and Canada: Class 3R (IEC 60825-1:2007) Other countries or regions: Class 1 (IEC/EN 60825-1:2014)
	Risk Group	Risk Group 2 (IEC 62471-5:2015)
Operating environment	Temperature	0°C (32°F) to 45°C (113°F) The projector cannot be used at an altitude of 2,700 m (8,858') or higher above sea level. The light output may decrease to protect the projector when the operating environment temperature exceeds 36 °C (96.8 °F).
	Humidity	20% to 80% (no condensation)

Wireless LAN*6

Compliance standards	IEEE802.11a/b/g/n
Transmission method	DSSS, OFDM
Modulation method	DBPSK, DQPSK, CCK, BPSK, QPSK, 16QAM, 64QAM, MIMO
Transmission speed	IEEE802.11b Maximum 11 Mbps IEEE802.11g/a Maximum 54 Mbps IEEE802.11n Maximum 300 Mbps
Communication distance	Approx. 30 m (98'5") (depending on the operating environment)
Frequency band (Channels used)	
for PT-MZ770, PT-MZ770L,:	IEEE802.11b/g/n: 2.412 GHz - 2.462 GH z (Channels 1 to 11) IEEE802.11a/n: 5.180 GHz - 5.240 GHz (W52), 5.260 GHz - 5.320 GHz (W53), 5.660 GHz - 5.700 GHz (Channels 36/40/44/48 (W52) , Channels 52/56/60/64 (W53), Channels 132/136/140 (part of W56))
for PT-MZ770A, PT-MZ770LA:	IEEE802.11b/g/n: 2.412 GHz - 2.462 GHz (Channels 1 to 11) IEEE802.11a/n: 5.745 GHz - 5.805 GHz (W58: excluding ch165) (Channels 149/153/157/161 (W58: excluding ch 165)) ,
*for Taiwan	5.280 GHz - 5.320 GHz (W53: excluding ch 52), 5.745 GHz - 5.805 GHz (W58)(Channels 56/60/64 (W53: excluding ch 52), Channels 149/153/157/161 (W58: excluding ch 165))
for PT-MZ770D, PT-MW730D :	IEEE802.11b/g/n: 2.412 GHz - 2.472 GHz (Channels 1 to 13) IEEE802.11a/n: 5.180 GHz - 5.240 GHz (W52), 5.745 GHz - 5.805 GHz (W58: excluding ch165), 5.745 GHz - 5.825 GHz (W58), 5.260 GHz - 5.320 GHz (W53) (Channels 36/40/44/48 (W52), Channels 149/153/157/161 (W58: excluding ch 165), Channels 149/153/157/161/165 (W58), Channels 52/56/60/64 (W53))
Security	When connected in infrastructure mode 128 bits/64 bits WEP, WPA-PSK <TKIP/AES>, WPA2-PSK <TKIP/AES>, WPA-EAP/WPA2-EAP <PEAP (MS-CHAPv2)/PEAP (GTC)/EAP-TTLS (MD5) / EAP-TTLS (MS-CHAPv2)/EAP-FAST (MS-CHAPv2)/EAP-FAST (GTC)/EAP-TLS>

Remote control unit

Power supply	DC 3 V (AAA/R03/LR03 battery × 2)
Operation range	Approx. 30 m (98'5") (when operated directly in front of signal receiver)
Dimensions (W × H × D)	48 x 145 x 27 mm (1-7/8" x 5-23/32" x 1/16")
Weight	Approx. 102g (3.60 ozs.) (including batteries)

Other Applications

Multi Monitoring and Control Software (for Windows only)
Logo Transfer Software (for Windows only)
Smart Projector Control (for iOS/Android)
Wireless Manager (for Windows/Mac)
Wireless Projector app (for iOS/Android)
Plug and Share (for Windows/Mac)

Supplied accessories

Wireless remote control unit (× 1)
Power cord (3.0m x 1) (× 2 for UK and Asia)
CD-ROM (Operating Instructions × 1)
Batteries for remote control (R03/AAA type × 2)
Power cord holder (× 1)
Instruction manual (Basic guide)
Application guide

Optional accessories

Ceiling Mount Bracket	for High ceilings	ET-PKD120H
Ceiling Mount Bracket	for Low ceilings	ET-PKD120S
Ceiling Mount Bracket	Projector Mount Bracket	ET-PKE301B*7
Wireless Module Unit		ET-WM300
Replacement Filter Unit		ET-RFM100
Digital Interface Box		ET-YFB100G
DIGITAL LINK switcher		ET-YFB200G
Easy Wireless Stick		ET-UW100 *Available with US, Canada, Australia, New Zealand and Thai only.
Early Warning Software		ET-SWA100 series*8
Fixed-focus lens		ET-ELW21
Zoom lens		ET-ELW22
Zoom lens		ET-ELW20
Zoom lens		ET-ELS20 *Available with US, Canada and Europe area only
Zoom lens		ET-ELT22
Zoom lens		ET-ELT23

LCD Projectors

PT-MZ770/MZ770L

Dimensions

unit : mm (inch)
NOTE: This illustration is not drawn to scale.

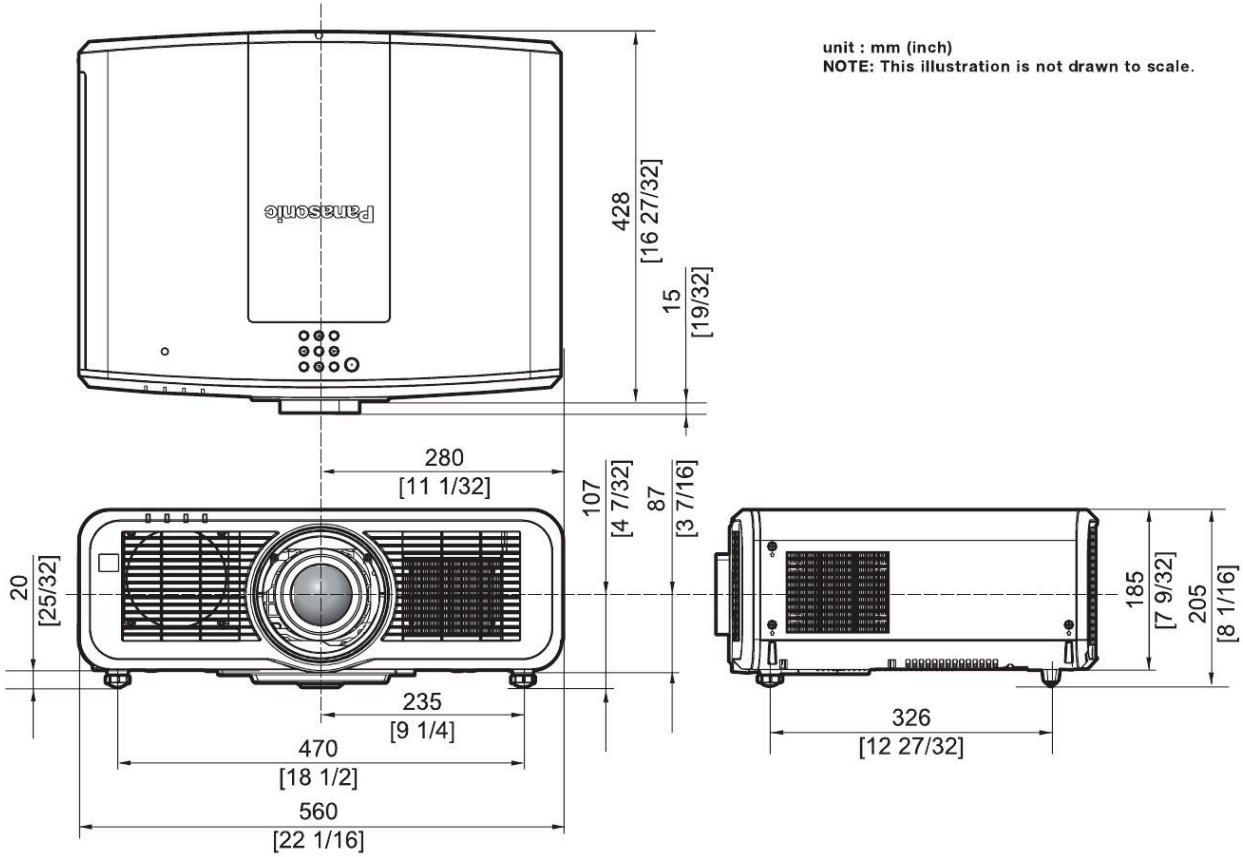

* The above dimensions are obtained when the standard zoom lens is attached.
* Actual dimensions may differ depending on the product.

Terminals

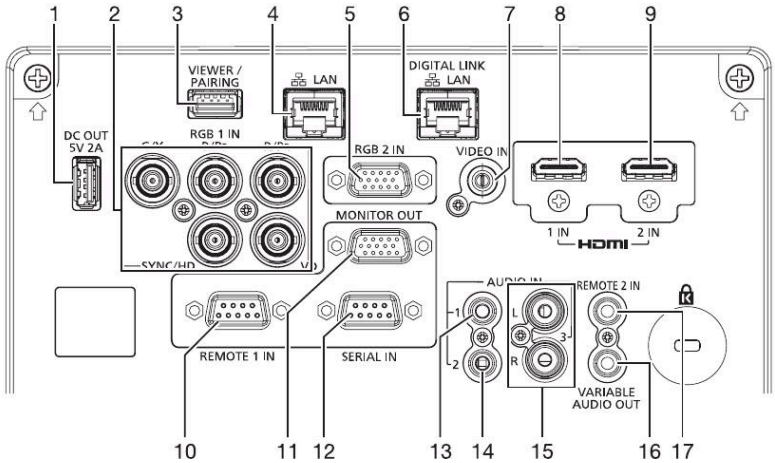

1 DC output
2 RGB 1 input
3 VIEWER/PAIRING connector
4 LAN connector
5 RGB 2 input
6 DIGITAL LINK / LAN connector
7 VIDEO input
8 HDMI 1 input
9 HDMI 2 input
10 REMOTE 1 input
11 MONITOR output
12 SERIAL input
13 AUDIO input 1
14 AUDIO input 2
15 AUDIO input 3
16 VARIABLE AUDIO output
17 REMOTE 2 input

Standard setting-up position

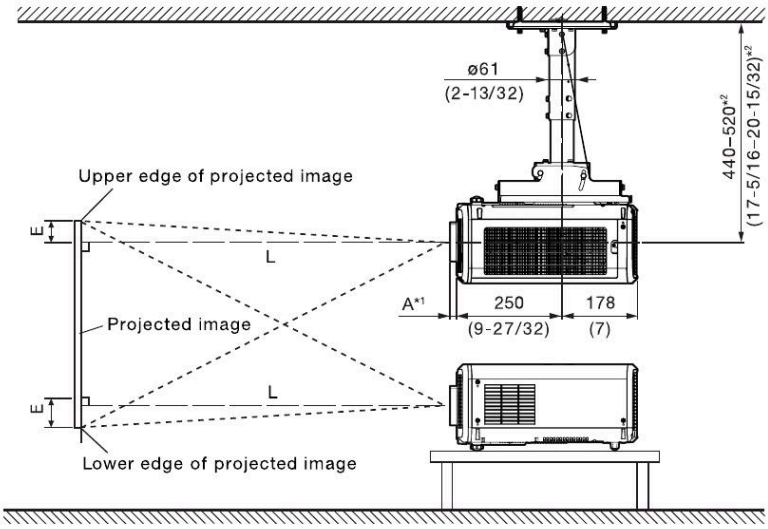

*1 When the lens protrudes to the maximum.

A: ELW21	5mm
ELW22	50mm
ELW20	35mm
ELS20/Standard lens	15mm
ELT22	36mm
ELT23	32mm

*2 Adjustable in 40 mm (1-9/16 in) steps.

NOTE:

Illustrations show the projector installed using optional ceiling mount bracket ET-PKD120H and bracket assembly ET-PKE301B.

This illustration is not drawn to scale.

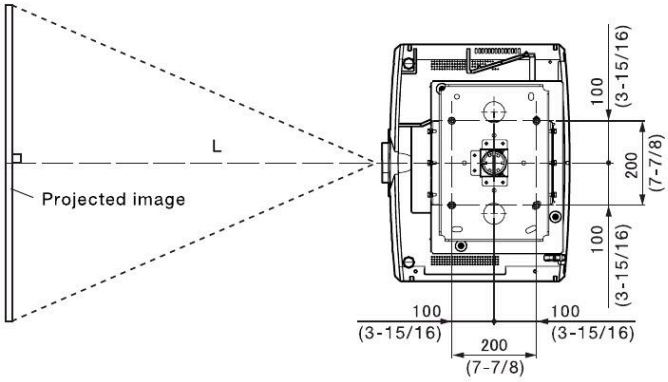

unit : mm (inch)

Caution:

- All construction work should be done by a qualified technician.
- When mounting to the ceiling, use the special mounting bracket. To prevent the projector from dropping, attach the wire that is included with the projector between the mounting bracket and the ceiling.

Projection distance for 16:10 aspect ratio screen

Unit: meters

Lens type				Fixed-focus lens	Zoom lens		Zoom lens		*Supplied lens*		Zoom lens		Zoom lens		Height from the edge of screen tocenter of lens (H)*1		
Projection Lens Model No.				ET-ELW21	ET-ELW22		ET-ELW20		ET-ELS20*2		ET-ELT22		ET-ELT23		Fixed-focus lens ET-ELW21	Zoom lenses ET-ELW22	Zoom lenses (Other than ET-ELW22)
Throw ratio*3				0.764:1	0.786-0.983:1		1.21-1.66:1		1.61-2.76:1		2.72-4.48:1		4.44-7.12:1				
Screen size				Distance to screen (L)													
Diagonal (SD) [m]	[in]	Height (SH) [m]	Width (SW) [m]		min.	max.	min.	max.	min.	max.	min.	max	min.	max.			
1.02 /	40	0.538	0.862	0.63	—	—	1.02	1.41	***1.36***	***2.35***	2.29	3.81	3.72	6.03	0.27	—	-0.09 – 0.63
1.27 /	50	0.673	1.077	0.80	—	—	1.29	1.77	***1.71***	***2.95***	2.89	4.79	4.70	7.59	0.34	—	-0.11 – 0.79
1.52 /	60	0.808	1.292	0.97	1.00	1.26	1.55	2.14	***2.06***	***3.55***	3.49	5.77	5.68	9.15	0.40	-0.08 – 0.89	-0.14 – 0.95
1.78 /	70	0.942	1.508	1.14	1.18	1.48	1.82	2.50	***2.42***	***4.15***	4.09	6.75	6.66	10.71	0.47	-0.09 – 1.04	-0.16 – 1.10
2.03 /	80	1.077	1.723	1.32	1.35	1.69	2.09	2.87	***2.77***	***4.76***	4.69	7.73	7.64	12.27	0.54	-0.11 – 1.18	-0.18 – 1.26
2.29 /	90	1.212	1.939	1.49	1.53	1.91	2.36	3.23	***3.12***	***5.36***	5.30	8.71	8.63	13.83	0.61	-0.12 – 1.33	-0.21 – 1.42
2.54 /	100	1.346	2.154	1.66	1.71	2.13	2.63	3.60	***3.48***	***5.96***	5.90	9.69	9.61	15.39	0.67	-0.13 – 1.48	-0.23 – 1.58
3.05 /	120	1.615	2.585	2.00	2.06	2.56	3.16	4.33	***4.18***	***7.16***	7.10	11.65	11.57	18.51	0.81	-0.16 – 1.78	-0.27 – 1.89
3.81 /	150	2.019	3.231	2.52	2.58	3.22	3.97	5.42	***5.24***	***8.96***	8.90	14.59	14.52	23.19	1.01	-0.20 – 2.22	-0.34 – 2.36
5.08 /	200	2.692	4.308	3.38	3.46	4.30	5.31	7.25	***7.01***	***11.96***	11.91	19.49	19.43	30.99	1.35	-0.27 – 2.96	-0.46 – 3.15
6.35 /	250	3.365	5.385	4.24	4.34	5.39	6.65	9.07	***8.77***	***14.96***	14.91	24.39	24.34	38.79	1.68	-0.34 – 3.70	-0.57 – 3.94
7.62 /	300	4.039	6.462	5.10	5.21	6.48	7.99	10.90	***10.54***	***17.97***	17.92	29.29	29.25	46.59	2.02	-0.40 – 4.44	-0.69 – 4.73
8.89 /	350	4.712	7.539	5.95	6.09	7.56	9.33	12.73	***12.30***	***20.97***	20.92	34.19	34.16	54.39	2.36	-0.47 – 5.18	-0.80 – 5.51
10.16 /	400	5.385	8.616	6.81	6.97	8.65	10.67	14.55	***14.07***	***23.97***	23.93	39.09	39.07	62.19	2.69	-0.54 – 5.92	-0.92 – 6.30

Unit: feet

Lens type				Fixed-focus lens	Zoom lens		Zoom lens		*Supplied lens*		Zoom lens		Zoom lens		Height from the edge of screen tocenter of lens (H)*1		
Projection Lens Model No.				ET-ELW21	ET-ELW22		ET-ELW20		ET-ELS20*2		ET-ELT22		ET-ELT23		Fixed-focus lens ET-ELW21	Zoom lenses ET-ELW22	Zoom lenses (Other than ET-ELW22)
Throw ratio*3				0.764:1	0.786-0.983:1		1.21-1.66:1		1.61-2.76:1		2.72-4.48:1		4.44-7.12:1				
Screen size				Distance to screen (L)													
Diagonal (SD) [m]	[in]	Height (SH) [m]	Width (SW) [m]		min.	max.	min.	max.	min.	max.	min.	max	min.	max.			
1.02 /	40	0.538	0.862	2.1	—	—	3.3	4.6	***4.5***	***7.7***	7.5	12.5	12.2	19.8	0.9	—	-0.3 – 2.1
1.27 /	50	0.673	1.077	2.6	—	—	4.2	5.8	***5.6***	***9.7***	9.5	15.7	15.4	24.9	1.1	—	-0.4 – 2.6
1.52 /	60	0.808	1.292	3.2	3.3	4.1	5.1	7.0	***6.8***	***11.6***	11.5	18.9	18.6	30.0	1.3	-0.3 – 2.9	-0.5 – 3.1
1.78 /	70	0.942	1.508	3.7	3.9	4.9	6.0	8.2	***7.9***	***13.6***	13.4	22.1	21.9	35.1	1.5	-0.3 – 3.4	-0.5 – 3.6
2.03 /	80	1.077	1.723	4.3	4.4	5.5	6.9	9.4	***9.1***	***15.6***	15.4	25.4	25.1	40.3	1.8	-0.4 – 3.9	-0.6 – 4.1
2.29 /	90	1.212	1.939	4.9	5.0	6.3	7.7	10.6	***10.2***	***17.6***	17.4	28.6	28.3	45.4	2.0	-0.4 – 4.4	-0.7 – 4.7
2.54 /	100	1.346	2.154	5.4	5.6	7.0	8.6	11.8	***11.4***	***19.6***	19.4	31.8	31.5	50.5	2.2	-0.4 – 4.9	-0.8 – 5.2
3.05 /	120	1.615	2.585	6.6	6.8	8.4	10.4	14.2	***13.7***	***23.5***	23.3	38.2	38.0	60.7	2.7	-0.5 – 5.8	-0.9 – 6.2
3.81 /	150	2.019	3.231	8.3	8.5	10.6	13.0	17.8	***17.2***	***29.4***	29.2	47.9	47.6	76.1	3.3	-0.7 – 7.3	-1.1 – 7.7
5.08 /	200	2.692	4.308	11.1	11.4	14.1	17.4	23.8	***23.0***	***39.2***	39.1	63.9	63.7	101.7	4.4	-0.9 – 9.7	-1.5 –10.3
6.35 /	250	3.365	5.385	13.9	14.2	17.7	21.8	29.8	***28.8***	***49.1***	48.9	80.0	79.9	127.3	5.5	-1.1 –12.1	-1.9 –12.9
7.62 /	300	4.039	6.462	16.7	17.1	21.3	26.2	35.8	***34.6***	***59.0***	58.8	96.1	96.0	152.9	6.6	-1.3 –14.6	-2.3 –15.5
8.89 /	350	4.712	7.539	19.5	20.0	24.8	30.6	41.8	***40.4***	***68.8***	68.6	112.2	112.1	178.4	7.7	-1.5 –17.0	-2.6 –18.1
10.16 /	400	5.385	8.616	22.3	22.9	28.4	35.0	47.7	***46.2***	***78.6***	78.5	128.2	128.2	204.0	8.8	-1.8 –19.4	-3.0 –20.7

- **The value for L (distance to screen) varies slightly within ±5% depending on the zoom lens characteristics.**
- **The zoom lens characteristics may cause slight image distortion.**
- **When vertical keystone correction is used, the image is corrected in the direction that reduces its projected size.**
- **The brightness varies depending on the zoom setting.**

***1 When the fixed-focus lens (Model No.: ET-ELW21) is attached, the lens shift is not possible. The height position (H) becomes SH/2.**
***2 Available with US, Canada and Europe area only.**
***3 The throw ratio is based on the value during projection with the projected image size of 2.03 m (80").**

Projection distance for 16:9 aspect ratio screen

Unit: meters

Lens type				Fixed-focus lens	Zoom lens		Zoom lens		*Supplied lens*		Zoom lens		Zoom lens		Height from the edge of screen tocenter of lens (H)*1		
Projection Lens Model No.				ET-ELW21	ET-ELW22		ET-ELW20		ET-ELS20*2		ET-ELT22		ET-ELT23		Fixed-focus lens ET-ELW21	Zoom lenses ET-ELW22	Zoom lenses (Other than ET-ELW22)
Throw ratio*3				0.765:1	0.787-0.984:1		1.21-1.66:1		1.61-2.76:1		2.73-4.49:1		4.44-7.12:1				
Screen size				Distance to screen (L)													
Diagonal (SD) [m]	[in]	Height (SH) [m]	Width (SW) [m]		min.	max.	min.	max.	min.	max.	min.	max	min.	max.			
1.02 /	40	0.498	0.886	0.65	—	—	1.05	1.45	***1.40***	***2.42***	2.36	3.92	3.83	6.20	0.25	—	-0.12 – 0.62
1.27 /	50	0.623	1.107	0.83	—	—	1.32	1.82	***1.76***	***3.04***	2.97	4.92	4.83	7.81	0.31	—	-0.15 – 0.77
1.52 /	60	0.747	1.328	1.00	1.03	1.30	1.60	2.20	***2.12***	***3.65***	3.59	5.93	5.84	9.41	0.37	-0.12 – 0.87	-0.18 – 0.93
1.78 /	70	0.872	1.550	1.18	1.21	1.52	1.87	2.57	***2.49***	***4.27***	4.21	6.94	6.85	11.01	0.44	-0.15 – 1.02	-0.21 – 1.08
2.03 /	80	0.996	1.771	1.35	1.39	1.74	2.15	2.95	***2.85***	***4.89***	4.83	7.95	7.86	12.62	0.50	-0.17 – 1.16	-0.24 – 1.24
2.29 /	90	1.121	1.992	1.53	1.57	1.97	2.43	3.32	***3.21***	***5.51***	5.45	8.95	8.87	14.22	0.56	-0.19 – 1.31	-0.27 – 1.39
2.54 /	100	1.245	2.214	1.71	1.75	2.19	2.70	3.70	***3.57***	***6.12***	6.06	9.96	9.88	15.82	0.62	-0.21 – 1.45	-0.30 – 1.55
3.05 /	120	1.494	2.657	2.06	2.11	2.64	3.25	4.45	***4.30***	***7.36***	7.30	11.97	11.90	19.03	0.75	-0.25 – 1.74	-0.37 – 1.86
3.81 /	150	1.868	3.321	2.59	2.66	3.31	4.08	5.58	***5.39***	***9.21***	9.15	15.00	14.93	23.84	0.93	-0.31 – 2.18	-0.46 – 2.32
5.08 /	200	2.491	4.428	3.47	3.56	4.42	5.46	7.45	***7.20***	***12.29***	12.24	20.03	19.98	31.86	1.25	-0.42 – 2.91	-0.61 – 3.10
6.35 /	250	3.113	5.535	4.36	4.46	5.54	6.83	9.33	***9.02***	***15.38***	15.33	25.07	25.02	39.87	1.56	-0.52 – 3.63	-0.76 – 3.87
7.62 /	300	3.736	6.641	5.24	5.36	6.66	8.21	11.20	***10.83***	***18.47***	18.42	30.10	30.07	47.89	1.87	-0.62 – 4.36	-0.91 – 4.65
8.89 /	350	4.358	7.748	6.12	6.26	7.77	9.59	13.08	***12.65***	***21.55***	21.51	35.14	35.12	55.91	2.18	-0.73 – 5.08	-1.07 – 5.42
10.16 /	400	4.981	8.855	7.00	7.16	8.89	10.97	14.96	***14.46***	***24.64***	24.60	40.18	40.17	63.92	2.49	-0.83 – 5.81	-1.22 – 6.20

Unit: feet

Lens type				Fixed-focus lens	Zoom lens		Zoom lens		*Supplied lens*		Zoom lens		Zoom lens		Height from the edge of screen tocenter of lens (H)*1		
Projection Lens Model No.				ET-ELW21	ET-ELW22		ET-ELW20		ET-ELS20*2		ET-ELT22		ET-ELT23		Fixed-focus lens ET-ELW21	Zoom lenses ET-ELW22	Zoom lenses (Other than ET-ELW22)
Throw ratio*3				0.765:1	0.787-0.984:1		1.21-1.66:1		1.61-2.76:1		2.73-4.49:1		4.44-7.12:1				
Screen size				Distance to screen (L)													
Diagonal (SD) [m]	[in]	Height (SH) [m]	Width (SW) [m]		min.	max.	min.	max.	min.	max.	min.	max	min.	max.			
1.02 /	40	0.498	0.886	2.1	—	—	3.4	4.8	***4.6***	***7.9***	7.7	12.9	12.6	20.3	0.8	—	-0.4 – 2.0
1.27 /	50	0.623	1.107	2.7	—	—	4.3	6.0	***5.8***	***10.0***	9.7	16.1	15.8	25.6	1.0	—	-0.5 – 2.5
1.52 /	60	0.747	1.328	3.3	3.4	4.3	5.2	7.2	***7.0***	***12.0***	11.8	19.5	19.2	30.9	1.2	-0.4 – 2.9	-0.6 – 3.1
1.78 /	70	0.872	1.550	3.9	4.0	5.0	6.1	8.4	***8.2***	***14.0***	13.8	22.8	22.5	36.1	1.4	-0.5 – 3.3	-0.7 – 3.5
2.03 /	80	0.996	1.771	4.4	4.6	5.7	7.1	9.7	***9.4***	***16.0***	15.8	26.1	25.8	41.4	1.6	-0.6 – 3.8	-0.8 – 4.1
2.29 /	90	1.121	1.992	5.0	5.2	6.5	8.0	10.9	***10.5***	***18.1***	17.9	29.4	29.1	46.7	1.8	-0.6 – 4.3	-0.9 – 4.6
2.54 /	100	1.245	2.214	5.6	5.7	7.2	8.9	12.1	***11.7***	***20.1***	19.9	32.7	32.4	51.9	2.0	-0.7 – 4.8	-1.0 – 5.1
3.05 /	120	1.494	2.657	6.8	6.9	8.7	10.7	14.6	***14.1***	***24.1***	24.0	39.3	39.0	62.4	2.5	-0.8 – 5.7	-1.2 – 6.1
3.81 /	150	1.868	3.321	8.5	8.7	10.9	13.4	18.3	***17.7***	***30.2***	30.0	49.2	49.0	78.2	3.1	-1.0 – 7.2	-1.5 – 7.6
5.08 /	200	2.491	4.428	11.4	11.7	14.5	17.9	24.4	***23.6***	***40.3***	40.2	65.7	65.6	104.5	4.1	-1.4 – 9.5	-2.0 –10.2
6.35 /	250	3.113	5.535	14.3	14.6	18.2	22.4	30.6	***29.6***	***50.5***	50.3	82.3	82.1	130.8	5.1	-1.7 –11.9	-2.5 –12.7
7.62 /	300	3.736	6.641	17.2	17.6	21.9	26.9	36.7	***35.5***	***60.6***	60.4	98.8	98.7	157.1	6.1	-2.0 –14.3	-3.0 –15.3
8.89 /	350	4.358	7.748	20.1	20.5	25.5	31.5	42.9	***41.5***	***70.7***	70.6	115.3	115.2	183.4	7.2	-2.4 –16.7	-3.5 –17.8
10.16 /	400	4.981	8.855	23.0	23.5	29.2	36.0	49.1	***47.4***	***80.8***	80.7	131.8	131.8	209.7	8.2	-2.7 –19.1	-4.0 –20.3

- **The value for L (distance to screen) varies slightly within ±5% depending on the zoom lens characteristics.**
- **The zoom lens characteristics may cause slight image distortion.**
- **When vertical keystone correction is used, the image is corrected in the direction that reduces its projected size.**
- **The brightness varies depending on the zoom setting.**

***1 When the fixed-focus lens (Model No.: ET-ELW21) is attached, the lens shift is not possible. The height position (H) becomes SH/2.**
***2 Available with US, Canada and Europe area only.**
***3 The throw ratio is based on the value during projection with the projected image size of 2.03 m (80").**

Projection distance for 4:3 aspect ratio screen

Unit: meters

Lens type				Fixed-focus lens	Zoom lens		Zoom lens		*Supplied lens*		Zoom lens		Zoom lens		Height from the edge of screen tocenter of lens (H)*1		
Projection Lens Model No.				ET-ELW21	ET-ELW22		ET-ELW20		ET-ELS20*2		ET-ELT22		ET-ELT23		Fixed-focus lens ET-ELW21	Zoom lenses ET-ELW22	Zoom lenses (Other than ET-ELW22)
Throw ratio*3				0.922:1	0.947-1.18:1		1.46-2.00:1		1.93-3.32:1		3.28-5.39:1		5.34-8.56:1				
Screen size				Distance to screen (L)													
Diagonal (SD) [m]	[in]	Height (SH) [m]	Width (SW) [m]		min.	max.	min.	max.	min.	max.	min.	max	min.	max.			
1.02 /	40	0.610	0.813	0.72	—	—	1.16	1.60	***1.54***	***2.67***	2.61	4.33	4.24	6.85	0.30	—	-0.10 – 0.71
1.27 /	50	0.762	1.016	0.91	—	—	1.46	2.01	***1.94***	***3.35***	3.29	5.43	5.35	8.62	0.38	—	-0.13 – 0.89
1.52 /	60	0.914	1.219	1.11	1.14	1.43	1.77	2.43	***2.34***	***4.03***	3.97	6.54	6.46	10.39	0.46	-0.09 – 1.01	-0.16 – 1.07
1.78 /	70	1.067	1.422	1.30	1.34	1.68	2.07	2.84	***2.74***	***4.71***	4.65	7.65	7.57	12.15	0.53	-0.11 – 1.17	-0.18 – 1.25
2.03 /	80	1.219	1.626	1.50	1.54	1.92	2.37	3.25	***3.14***	***5.39***	5.33	8.76	8.68	13.92	0.61	-0.12 – 1.34	-0.21 – 1.43
2.29 /	90	1.372	1.829	1.69	1.74	2.17	2.68	3.67	***3.54***	***6.07***	6.01	9.87	9.79	15.68	0.69	-0.14 – 1.51	-0.23 – 1.60
2.54 /	100	1.524	2.032	1.89	1.94	2.42	2.98	4.08	***3.94***	***6.75***	6.69	10.98	10.91	17.45	0.76	-0.15 – 1.68	-0.26 – 1.78
3.05 /	120	1.829	2.438	2.28	2.33	2.91	3.59	4.91	***4.74***	***8.11***	8.05	13.20	13.13	20.98	0.91	-0.18 – 2.01	-0.31 – 2.14
3.81 /	150	2.286	3.048	2.86	2.93	3.65	4.50	6.15	***5.94***	***10.15***	10.09	16.53	16.47	26.28	1.14	-0.23 – 2.51	-0.39 – 2.67
5.08 /	200	3.048	4.064	3.83	3.92	4.88	6.02	8.21	***7.94***	***13.55***	13.49	22.08	22.03	35.11	1.52	-0.30 – 3.35	-0.52 – 3.57
6.35 /	250	3.810	5.080	4.80	4.91	6.11	7.53	10.28	***9.94***	***16.95***	16.90	27.62	27.58	43.94	1.91	-0.38 – 4.19	-0.65 – 4.46
7.62 /	300	4.572	6.096	5.78	5.91	7.34	9.05	12.35	***11.94***	***20.34***	20.30	33.17	33.14	52.77	2.29	-0.46 – 5.03	-0.78 – 5.35
8.89 /	350	5.334	7.112	6.75	6.90	8.57	10.57	14.41	***13.93***	***23.74***	23.70	38.72	38.70	61.60	2.67	-0.53 – 5.87	-0.91 – 6.24
10.16 /	400	6.096	8.128	7.72	7.89	9.80	12.09	16.48	***15.93***	***27.14***	27.10	44.27	44.26	70.43	3.05	-0.61 – 6.71	-1.04 – 7.13

Unit: feet

Lens type				Fixed-focus lens	Zoom lens		Zoom lens		*Supplied lens*		Zoom lens		Zoom lens		Height from the edge of screen tocenter of lens (H)*1		
Projection Lens Model No.				ET-ELW21	ET-ELW22		ET-ELW20		ET-ELS20*2		ET-ELT22		ET-ELT23		Fixed-focus lens ET-ELW21	Zoom lenses ET-ELW22	Zoom lenses (Other than ET-ELW22)
Throw ratio*3				0.922:1	0.947-1.18:1		1.46-2.00:1		1.93-3.32:1		3.28-5.39:1		5.34-8.56:1				
Screen size				Distance to screen (L)													
Diagonal (SD) [m]	[in]	Height (SH) [m]	Width (SW) [m]		min.	max.	min.	max.	min.	max.	min.	max	min.	max.			
1.02 /	40	0.610	0.813	2.4	—	—	3.8	5.2	***5.1***	***8.8***	8.6	14.2	13.9	22.5	1.0	—	-0.3 – 2.3
1.27 /	50	0.762	1.016	3.0	—	—	4.8	6.6	***6.4***	***11.0***	10.8	17.8	17.6	28.3	1.2	—	-0.4 – 2.9
1.52 /	60	0.914	1.219	3.6	3.7	4.7	5.8	8.0	***7.7***	***13.2***	13.0	21.5	21.2	34.1	1.5	-0.3 – 3.3	-0.5 – 3.5
1.78 /	70	1.067	1.422	4.3	4.4	5.5	6.8	9.3	***9.0***	***15.5***	15.3	25.1	24.8	39.9	1.7	-0.4 – 3.8	-0.6 – 4.1
2.03 /	80	1.219	1.626	4.9	5.1	6.3	7.8	10.7	***10.3***	***17.7***	17.5	28.7	28.5	45.7	2.0	-0.4 – 4.4	-0.7 – 4.7
2.29 /	90	1.372	1.829	5.5	5.7	7.1	8.8	12.0	***11.6***	***19.9***	19.7	32.4	32.1	51.4	2.3	-0.5 – 5.0	-0.8 – 5.2
2.54 /	100	1.524	2.032	6.2	6.4	7.9	9.8	13.4	***12.9***	***22.1***	21.9	36.0	35.8	57.3	2.5	-0.5 – 5.5	-0.9 – 5.8
3.05 /	120	1.829	2.438	7.5	7.6	9.5	11.8	16.1	***15.6***	***26.6***	26.4	43.3	43.1	68.8	3.0	-0.6 – 6.6	-1.0 – 7.0
3.81 /	150	2.286	3.048	9.4	9.6	12.0	14.8	20.2	***19.5***	***33.3***	33.1	54.2	54.0	86.2	3.7	-0.8 – 8.2	-1.3 – 8.8
5.08 /	200	3.048	4.064	12.6	12.9	16.0	19.8	26.9	***26.0***	***44.5***	44.3	72.4	72.3	115.2	5.0	-1.0 –11.0	-1.7 –11.7
6.35 /	250	3.810	5.080	15.7	16.1	20.0	24.7	33.7	***32.6***	***55.6***	55.4	90.6	90.5	144.2	6.3	-1.2 –13.7	-2.1 –14.6
7.62 /	300	4.572	6.096	19.0	19.4	24.1	29.7	40.5	***39.2***	***66.7***	66.6	108.8	108.7	173.1	7.5	-1.5 –16.5	-2.6 –17.6
8.89 /	350	5.334	7.112	22.1	22.6	28.1	34.7	47.3	***45.7***	***77.9***	77.8	127.0	127.0	202.1	8.8	-1.7 –19.3	-3.0 –20.5
10.16 /	400	6.096	8.128	25.3	25.9	32.2	39.7	54.1	***52.3***	***89.0***	88.9	145.2	145.2	231.1	10.0	-2.0 –22.0	-3.4 –23.4

- **The value for L (distance to screen) varies slightly within ±5% depending on the zoom lens characteristics.**
- **The zoom lens characteristics may cause slight image distortion.**
- **When vertical keystone correction is used, the image is corrected in the direction that reduces its projected size.**
- **The brightness varies depending on the zoom setting.**

***1 When the fixed-focus lens (Model No.: ET-ELW21) is attached, the lens shift is not possible. The height position (H) becomes SH/2.**
***2 Available with US, Canada and Europe area only.**
***3 The throw ratio is based on the value during projection with the projected image size of 2.03 m (80").**

Formula to calculate projection distance per Projection Lens

To use a screen size not listed in this manual, check the screen size SD (m) and use the respective formula to calculate projection distance.
The unit of all the formulae is m. (Values obtained by the following calculation formulae contain a slight error.)
When calculating a projection distance using image size designation (value in inches), multiply the value in inches by 0.0254 and substitute it into SD in the formula for calculating the projection distance

Lens type	Projection Lens Model No.	Aspect ratio		Projection distance (L) formula
Fixed-focus lens	ET-ELW21	16:10		L = 0.6763 x SD - 0.0577
		16:9		L = 0.6951 x SD - 0.0577
		4:3		L = 0.7656 x SD - 0.0577
Zoom lens	ET-ELW22	16:10	Min.	L = 0.6904 x SD - 0.0485
			Max.	L = 0.8558 x SD - 0.0455
		16:9	Min.	L = 0.7096 x SD - 0.0485
			Max.	L = 0.8796 x SD - 0.0455
		4:3	Min.	L = 0.7816 x SD - 0.0485
			Max.	L = 0.9688 x SD - 0.0455
	ET-ELW20	16:10	Min.	L = 1.0557 x SD - 0.0555
			Max.	L = 1.4374 x SD - 0.0534
		16:9	Min.	L = 1.0851 x SD - 0.0555
			Max.	L = 1.4774 x SD - 0.0534
		4:3	Min.	L = 1.1952 x SD - 0.0555
			Max.	L = 1.6273 x SD - 0.0534
Standard zoom lens (Supplied lens)	ET-ELS20 *Available with US, Canada and Europe area only.	16:10	Min.	L = 1.3900 x SD - 0.0549
			Max.	L = 2.3640 x SD - 0.0482
		16:9	Min.	L = 1.4286 x SD - 0.0549
			Max.	L = 2.4297 x SD - 0.0482
		4:3	Min.	L = 1.5736 x SD - 0.0549
			Max.	L = 2.6763 x SD - 0.0482
Zoom lens	ET-ELT22	16:10	Min.	L = 2.3662 x SD - 0.1140
			Max.	L = 3.8583 x SD - 0.1129
		16:9	Min.	L = 2.4320 x SD - 0.1140
			Max.	L = 3.9656 x SD - 0.1129
		4:3	Min.	L = 2.6788 x SD - 0.1140
			Max.	L = 4.3680 x SD - 0.1129
Zoom lens	ET-ELT23	16:10	Min.	L = 3.8667 x SD - 0.2123
			Max.	L = 6.1416 x SD - 0.2108
		16:9	Min.	L = 3.9742 x SD - 0.2123
			Max.	L = 6.3123 x SD - 0.2108
		4:3	Min.	L = 4.3775 x SD - 0.2123
			Max.	L = 6.9529 x SD - 0.2108

Shift range

Optical axis shift function allows to shift the position of a projected image as shown below.

- **Floor mount / Ceiling mount**

When the Standard zoom lens/ET-ELW20/ ET-ELT22/ET-ELT23/ET-ELS20* is mounted.

* Available only in the US, Canada and Europe.

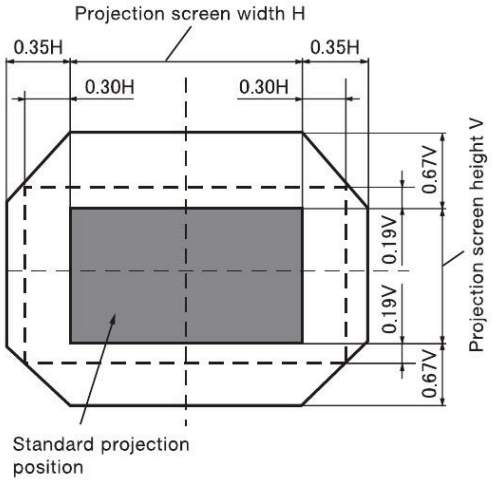

When the ET-ELW22 is mounted.

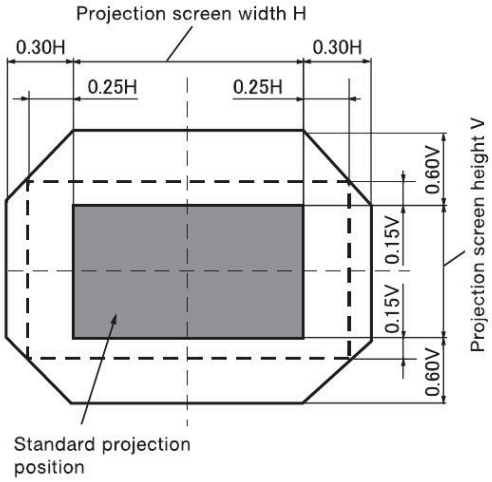

Installable angle

Install the projector at an angle within the range shown below.

FULL 360-degree projection

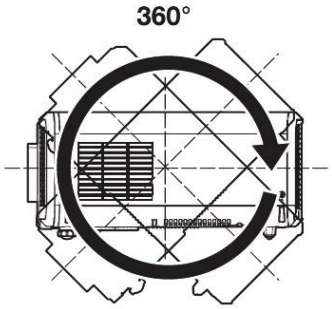

Vertical 360-deg.

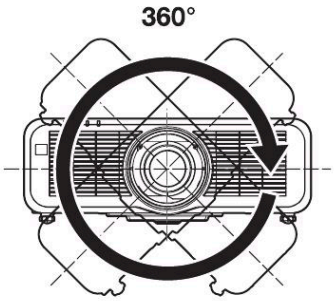

Horizontal 360-deg.

Tilting 360-deg. (V&H combination)

LCD Projectors

PT-MZ770/MZ770L

List of compatible signals

The following table specifies the video signals compatible with the projector.
This projector supports the signal with I in the compatible signal column.

- Symbols that indicate formats are as follows.
  —V: VIDEO
  —R: RGB
  —Y: YCBCR/YPBPR
  —H: HDMI
  —DL: DIGITAL LINK
- Input corresponding to each item in the plug and play column is as follows.
  —RGB: RGB 2 input
  —HDMI: HDMI1 / HDMI2 input
  —DIGITAL LINK: DIGITAL LINK input

Compatible signal	Resolution (Dots)	Scanning freq. H (KHz)	Scanning freq. V (Hz)	Dot clock freq. (MHz)	Format	Plug and Play*1 RGB	HDMI 4K/60p	HDMI 4K/30p	HDMI 2K	DIGITAL LINK 4K/60p	DIGITAL LINK 4K/30p	DIGITAL LINK 2K
NTSC/NTSC4.43/PAL-M/PAL60	720 x 480i	15.7	59.9	—	V	—	—	—	—	—	—	—
PAL/PAL-N/SECAM	720 x 576i	15.6	50.0	—	V	—	—	—	—	—	—	—
480/60i	720 x 480i	15.7	59.9	13.5	R/Y	—	—	—	—	—	—	—
576/50i	720 x 576i	15.6	50.0	13.5	R/Y	—	—	—	—	—	—	—
480/60i	720(1440)x 480i*2	15.7	59.9	27.0	H/DL	—	—	—	—	—	—	—
576/50i	720(1440)x 576i*2	15.6	50.0	27.0	H/DL	—	—	—	—	—	—	—
480/60p	720 x 480	31.5	59.9	27.0	R/Y/H/DL	—	✓	✓	✓	✓	✓	✓
576/50p	720 x 576	31.3	50.0	27.0	R/Y/H/DL	—	✓	✓	✓	✓	✓	✓
720/60p	1280 x 720	45.0	60.0*3	74.3	R/Y/H/DL	—	✓	✓	✓	✓	✓	✓
720/50p	1280 x 720	37.5	50.0	74.3	R/Y/H/DL	—	✓	✓	✓	✓	✓	✓
1080/60i	1920 x 1080i	33.8	60.0*3	74.3	R/Y/H/DL	—	✓	✓	✓	✓	✓	✓
1080/50i	1920 x 1080i	28.1	50.0	74.3	R/Y/H/DL	—	✓	✓	✓	✓	✓	✓
1080/24p	1920 x 1080	27.0	24.0*3	74.3	R/Y/H/DL	—	✓	✓	✓	✓	✓	✓
1080/24sF	1920 x 1080i	27.0	48.0*3	74.3	R/Y/H/DL	—	—	—	—	—	—	—
1080/25p	1920 x 1080	28.1	25.0	74.3	R/Y/H/DL	—	—	—	—	—	—	—
1080/30p	1920 x 1080	33.8	30.0*3	74.3	R/Y/H/DL	—	—	—	—	—	—	—
1080/60p	1920 x 1080	67.5	60.0*3	148.5	R/Y/H/DL	—	✓	✓	✓	✓	✓	✓
1080/50p	1920 x 1080	56.3	50.0	148.5	R/Y/H/DL	—	✓	✓	✓	✓	✓	✓
3840 x 2160/24p	3840 x 2160	54.0	24.0*3	297.0	H/DL	—	✓	✓	—	✓	✓	—
3840 x 2160/25p	3840 x 2160	56.3	25.0	297.0	H/DL	—	✓	✓	—	✓	✓	—
3840 x 2160/30p	3840 x 2160	67.5	30.0*3	297.0	H/DL	—	✓	✓	—	✓	✓	—
3840 x 2160/60p	3840 x 2160*4	135.0	60.0*3	297.0	H/DL	—	✓	—	—	✓	—	—
3840 x 2160/60p	3840 x 2160	135.0	60.0*3	594.0	H	—	✓	—	—	—	—	—
3840 x 2160/50p	3840 x 2160*4	112.5	50.0	297.0	H/DL	—	✓	—	—	✓	—	—
3840 x 2160/50p	3840 x 2160	112.5	50.0	594.0	H	—	✓	—	—	—	—	—
4096 x 2160/24p	4096 x 2160	54.0	24.0*3	297.0	H/DL	—	✓	✓	—	✓	✓	—
4096 x 2160/25p	4096 x 2160	56.3	25.0	297.0	H/DL	—	✓	✓	—	✓	✓	—
4096 x 2160/30p	4096 x 2160	67.5	30.0*3	297.0	H/DL	—	✓	✓	—	✓	✓	—
4096 x 2160/60p	4096 x 2160*4	135.0	60.0*3	297.0	H/DL	—	✓	—	—	✓	—	—
4096 x 2160/60p	4096 x 2160	135.0	60.0*3	594.0	H	—	✓	—	—	—	—	—
4096 x 2160/50p	4096 x 2160*4	112.5	50.0	297.0	H/DL	—	✓	—	—	✓	—	—
4096 x 2160/50p	4096 x 2160	112.5	50.0	594.0	H	—	✓	—	—	—	—	—
640 x 400/70	640 x 400	31.5	70.1	25.2	R/H/DL	—	—	—	—	—	—	—
640 x 400/85	640 x 400	37.9	85.1	31.5	R/H/DL	—	—	—	—	—	—	—
640 x 480/60	640 x 480	31.5	59.9	25.2	R/H/DL	✓	✓	✓	✓	✓	✓	✓
640 x 480/67	640 x 480	35.0	66.7	30.2	R/H/DL	—	—	—	—	—	—	—
640 x 480/73	640 x 480	37.9	72.8	31.5	R/H/DL	✓	✓	✓	✓	✓	✓	✓
640 x 480/75	640 x 480	37.5	75.0	31.5	R/H/DL	✓	✓	✓	✓	✓	✓	✓
640 x 480/85	640 x 480	43.3	85.0	36.0	R/H/DL	—	—	—	—	—	—	—
800 x 600/56	800 x 600	35.2	56.3	36.0	R/H/DL	✓	✓	✓	✓	✓	✓	✓
800 x 600/60	800 x 600	37.9	60.3	40.0	R/H/DL	✓	✓	✓	✓	✓	✓	✓
800 x 600/72	800 x 600	48.1	72.2	50.0	R/H/DL	✓	✓	✓	✓	✓	✓	✓
800 x 600/75	800 x 600	46.9	75.0	49.5	R/H/DL	✓	✓	✓	✓	✓	✓	✓
800 x 600/85	800 x 600	53.7	85.1	56.3	R/H/DL	—	—	—	—	—	—	—
832 x 624/75	832 x 624	49.7	74.6	57.3	R/H/DL	✓	✓	✓	✓	✓	✓	✓

LCD Projectors

PT-MZ770/MZ770L

Compatible signal	Resolution (Dots)	Scanning freq. H (KHz)	Scanning freq. V (Hz)	Dot clock freq. (MHz)	Format	Plug and Play*1 RGB	HDMI 4K/60p	HDMI 4K/30p	HDMI 2K	DIGITAL LINK 4K/60p	DIGITAL LINK 4K/30p	DIGITAL LINK 2K
1024 x 768/50	1024 x 768	39.6	50.0	51.9	R/H/DL	—	—	—	—	—	—	—
1024 x 768/60	1024 x 768	48.4	60.0	65.0	R/H/DL	✓	✓	✓	✓	✓	✓	✓
1024 x 768/70	1024 x 768	56.5	70.1	75.0	R/H/DL	✓	✓	✓	✓	✓	✓	✓
1024 x 768/75	1024 x 768	60.0	75.0	78.8	R/H/DL	✓	✓	✓	✓	✓	✓	✓
1024 x 768/82	1024 x 768	65.5	81.6	86.0	R/H/DL	—	—	—	—	—	—	—
1024 x 768/85	1024 x 768	68.7	85.0	94.5	R/H/DL	—	—	—	—	—	—	—
1024 x 768/100	1024 x 768	81.4	100.0	113.3	R/H/DL	—	—	—	—	—	—	—
1152 x 864/60	1152 x 864	53.7	60.0	81.6	R/H/DL	—	—	—	—	—	—	—
1152 x 864/75	1152 x 864	67.5	75.0	108.0	R/H/DL	—	—	—	—	—	—	—
1152 x 864/85	1152 x 864	77.1	85.0	119.7	R/H/DL	—	—	—	—	—	—	—
1152 x 870/75	1152 x 870	68.7	75.1	100.0	R/H/DL	✓	✓	✓	✓	✓	✓	✓
1280 x 720/50	1280 x 720	37.1	49.8	60.5	R/H/DL	—	—	—	—	—	—	—
1280 x 720/60	1280 x 720	44.8	59.9	74.5	R/H/DL	—	—	—	—	—	—	—
1280 x 768/50	1280 x 768	39.6	49.9	65.3	R/H/DL	—	—	—	—	—	—	—
1280 x 768/60	1280 x 768	47.7	60.0	80.1	R/H/DL	—	—	—	—	—	—	—
1280 x 768/60	1280 x 768	47.8	59.9	79.5	R/H/DL	—	—	—	—	—	—	—
1280 x 768/75	1280 x 768	60.3	74.9	102.3	R/H/DL	—	—	—	—	—	—	—
1280 x 768/85	1280 x 768	68.6	84.8	117.5	R/H/DL	—	—	—	—	—	—	—
1280 x 800/50	1280 x 800	41.3	50.0	68.0	R/H/DL	—	—	—	—	—	—	—
1280 x 800/60	1280 x 800	49.7	59.8	83.5	R/H/DL	—	—	—	—	—	—	—
1280 x 800/75	1280 x 800	62.8	74.9	106.5	R/H/DL	—	—	—	—	—	—	—
1280 x 800/85	1280 x 800	71.6	84.9	122.5	R/H/DL	—	—	—	—	—	—	—
1280 x 960/60	1280 x 960	60.0	60.0	108.0	R/H/DL	—	—	—	—	—	—	—
1280 x 1024/50	1280 x 1024	52.4	50	88.0	R/H/DL	—	—	—	—	—	—	—
1280 x 1024/60	1280 x 1024	64.0	60.0	108.0	R/H/DL	—	—	—	—	—	—	—
1280 x 1024/75	1280 x 1024	80.0	75.0	135.0	R/H/DL	✓	✓	✓	✓	✓	✓	✓
1280 x 1024/85	1280 x 1024	91.1	85.0	157.5	R/H/DL	—	—	—	—	—	—	—
1366 x 768/50	1366 x 768	39.6	49.9	69.0	R/H/DL	—	—	—	—	—	—	—
1366 x 768/60	1366 x 768	47.7	59.8	85.5	R/H/DL	—	—	—	—	—	—	—
1400 x 1050/50	1400 x 1050	54.1	50	99.9	R/H/DL	—	—	—	—	—	—	—
1400 x 1050/60	1400 x 1050	65.2	60.0	122.6	R/H/DL	—	—	—	—	—	—	—
1400 x 1050/60	1400 x 1050	65.3	60.0	121.8	R/H/DL	—	—	—	—	—	—	—
1400 x 1050/75	1400 x 1050	82.2	75.0	155.9	R/H/DL	—	—	—	—	—	—	—
1440 x 900/50	1440 x 900	46.3	50.0	87.4	R/H/DL	—	—	—	—	—	—	—
1440 x 900/60	1440 x 900	55.9	59.9	106.5	R/H/DL	—	—	—	—	—	—	—
1600 x 900/50	1600 x 900	46.4	49.9	96.5	R/H/DL	—	—	—	—	—	—	—
1600 x 900/60	1600 x 900	55.9	60.0	119.0	R/H/DL	—	—	—	—	—	—	—
1600 x 1200/50	1600 x 1200	61.8	49.9	131.5	R/H/DL	—	—	—	—	—	—	—
1600 x 1200/60	1600 x 1200	75.0	60.0	162.0	R/H/DL	✓	✓	✓	✓	✓	✓	✓
1680 x 1050/50	1680 x 1050	54.1	50.0	119.5	R/H/DL	—	—	—	—	—	—	—
1680 x 1050/60	1680 x 1050	65.3	60.0	146.3	R/H/DL	—	—	—	—	—	—	—
1920 x 1080/50	1920 x 1080	55.6	49.9	141.5	R/H/DL	—	—	—	—	—	—	—
1920 x 1080/60	1920 x 1080*5	66.6	59.9	138.5	R/H/DL	—	—	—	—	—	—	—
1920 x 1080/60	1920 x 1080*6	67.2	60.0	173.0	R	—	—	—	—	—	—	—
1920 x 1200/50	1920 x 1200	61.8	49.9	158.3	R/H/DL	—	—	—	—	—	—	—
1920 x 1200/60	1920 x 1200*5	74.0	60.0	154.0	R/H/DL	✓	✓	✓	✓	✓	✓	✓
1920 x 1200/60	1920 x 1200*6	74.6	59.9	193.3	R	—	—	—	—	—	—	—

*1 Signal with I in the plug and play column is a signal described in the EDID (extended display identification data) of the projector. The signal that does not have I in the plug and play column can also be input if it is described in the format column. The resolution may not be selected in the computer even if the projector is compatible with the signal that does not have I in the plug and play column.
*2 Pixel-Repetition signal (dot clock frequency 27.0 MHz) only
*3 The signal with 1/1.001x vertical scanning frequency is also supported.
*4 YP_BP_R 4:2:0 format only.
*5 VESA CVT-RB (Reduced Blanking)-compliant
*6 Samples the pixels in the image processing circuit and displays the image.

Notes on projector placement and operation
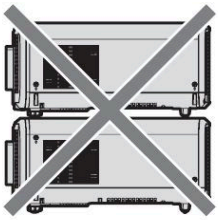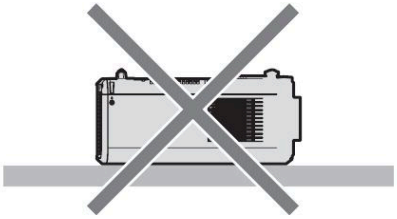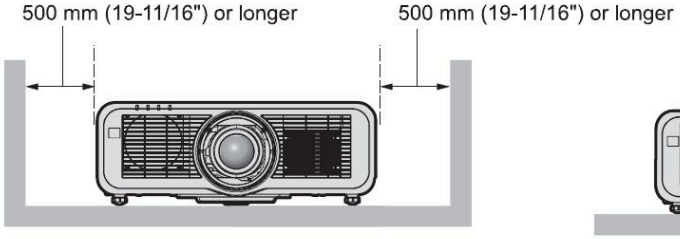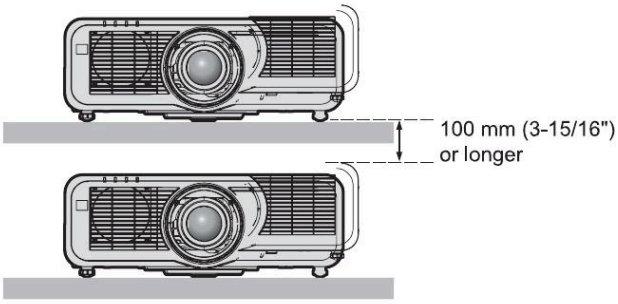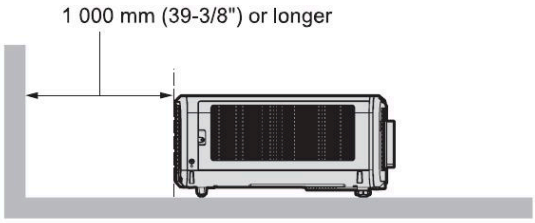
1. Never place objects on top of the projector while it is operating.
2. Make sure there is the unobstructed space as shown below or more around the projector's exhaust openings. In addition to this space, also ensure that there is a sufficient work space for removing and installing filter and other parts.
3. Make sure that nothing blocks the projector's air intake and exhaust openings. Also, install the projector so that cool or hot air from other air conditioning equipment does not flow directly toward the projector's air intake or exhaust openings.
4. Do not install the projector in an enclosed space. If it is necessary to install it in an enclosed space, add a separate ventilation system. If ventilation is insufficient, hot air will accumulate at the intake opening. This may cause the projector's protective circuit to interrupt projector operation.